Linear system **QSRZ 60, 80, 100, 125**

TECHNICAL SUMMARY
REFERENCE ONLY

RAIL GUIDE

- WITHOUT DRIVE
- SUPPORT UNIT
- WITHOUT COVERBAND

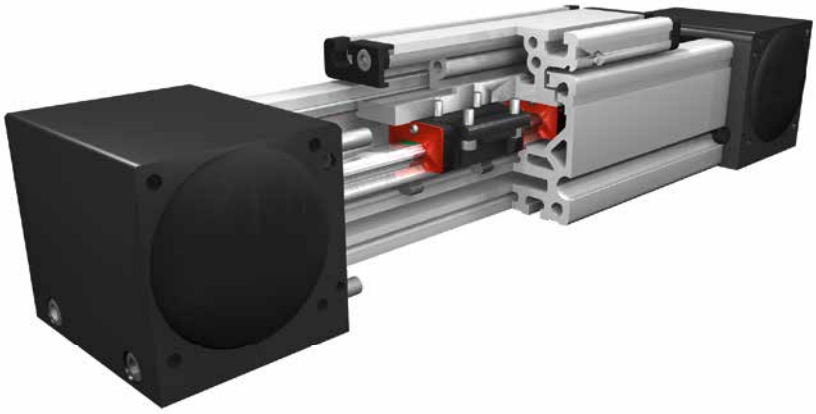

Function:
This unit consists of a square aluminium profile with an integrated ball rail. The carriage is with leading nut and without drive. Construction compatible with QSZ.

Fitting position: As required, max. length 6.000mm
Carriage connection: By T-slots
Unit mounting: By half round slots and tapped holes in the bearing blocks, mounting sets.

Forces and torques

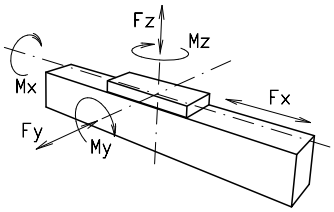

Size	QSRZ 60		QSRZ 80		QSRZ 100		QSRZ 125	
permitted dyn. forces*	5000 km	10000 km	5000 km	10000 km	5000 km	10000 km	5000 km	10000 km
F_y (N)	1410	990	3570	2550	4080	2900	6892	5470
F_z (N)	3520	2500	8500	6050	10300	7270	17205	13659
M_x (Nm)	33	23	107	75	142	101	288	228
M_y (Nm)	104	73	310	222	439	311	1110	881
M_z (Nm)	100	70	296	210	412	292	1012	803

All forces and torques related to the following:

existing values / table values: $\frac{Fy}{Fy_{dyn}} + \frac{Fz}{Fz_{dyn}} + \frac{Mx}{Mx_{dyn}} + \frac{My}{My_{dyn}} + \frac{Mz}{Mz_{dyn}} \leq 1$

Geometrical moments of inertia of aluminium profile				
I_x mm^4	$4{,}3 \times 10^5$	$14{,}3 \times 10^5$	$31{,}8 \times 10^5$	$74{,}9 \times 10^5$
I_y mm^4	$5{,}8 \times 10^5$	$18{,}7 \times 10^5$	$46{,}5 \times 10^5$	$106{,}5 \times 10^5$
E-Modulus N/mm^2	70000	70000	70000	70000

For life-time calculation use our homepage.

** referred to life-time*

Deflection:

$$f = \frac{F * L^3}{E * I * 192}$$

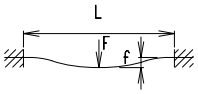

f = deflection (mm)
F = load (N)
L = free length (mm)
E = elastic modulus 70000 (N/mm^2)
I = second moment of area (mm^4)

Our policy is one of continued research and development.
We therefore reserve the right to amend,without notice, the specifications given in this document. © 2023 Bahr Modultechnik GmbH

Linear system **QSRZ 60, 80, 100, 125**

Dimensions (mm)

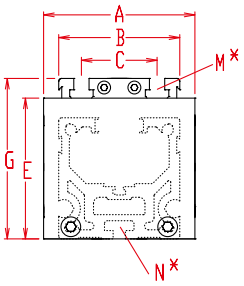

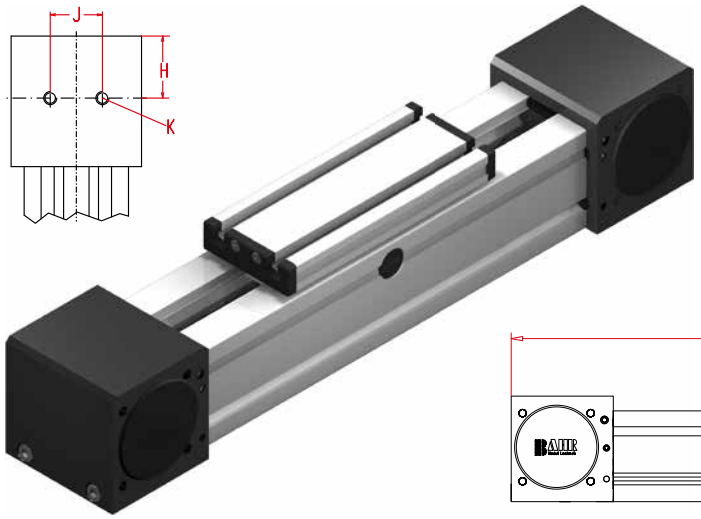

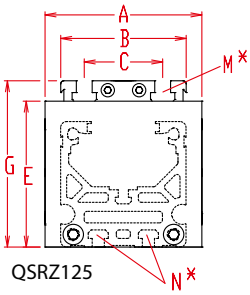

QSRZ125

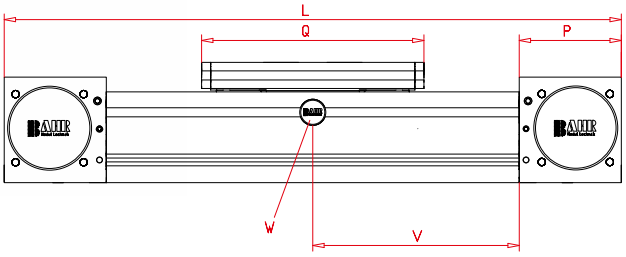

V = Q + 100 mm
W = servicing position

*For slide nuts refer to chapter 2.2 page 2

Increasing the carriage length will increase the basic length by the same amount.

Size ❒	Basic length L	A	B	C	E	G	H	J	K	N for	M for	P	Q	Basic weight	Weight per 100 mm
QSRZ 60	300	80	60	36	63	79	29,5	30	M 8	M 5	M 6	59	177	3,5 kg	0,55 kg
QSRZ 80	430	100	80	50	93	106	47,5	40	M 10	M 6	M 8	90	232	10,4 kg	0,96 kg
QSRZ 100	510	130	100	66	110	129	55	50	M 12	M 10	M 10	110	268	15,9 kg	1,47 kg
QSRZ 125	570	160	125	82	134,5	157,5	65	60	M 12	M 10	M 12	130	300	30,5 kg	2,21 kg

0 **Choice of guide body profile:**
(0) Standard **(1)** corrosion-protected screws
(4) expanded corrosion-protected version (depending on the availability of components)

0 **Choice of carriages:**

Size	Version 0		Version 1		Version 2		Version 3	
	Q	L	Q	L	Q	L	Q	L
60	177	300	152	280	242	370	302	430
80	232	430	196	390	312	510	390	585
100	268	510	260	500	362	610	448	690
125	300	570	260	530	365	635	467	740

QSRZ	80	0	0	0	0	0	0	0	1500
	Pos.	1	2	3	4	5	6	7	

Basic length + stroke = total length

For additional accessories refer to chapter 2.2

Sample ordering code:
QSRZ80 with standard body profile, standard carriage, coupling claw on one side, 1070 mm stroke

Our policy is one of continued research and development.
We therefore reserve the right to amend,without notice, the specifications given in this document. © 2023 Bahr Modultechnik GmbH