# Linear system **LSR 60, 80**

TECHNICAL SUMMARY
REFERENCE ONLY

## RAIL GUIDE

- WITHOUT DRIVE
- SUPPORT UNIT
- WITHOUT COVERBAND

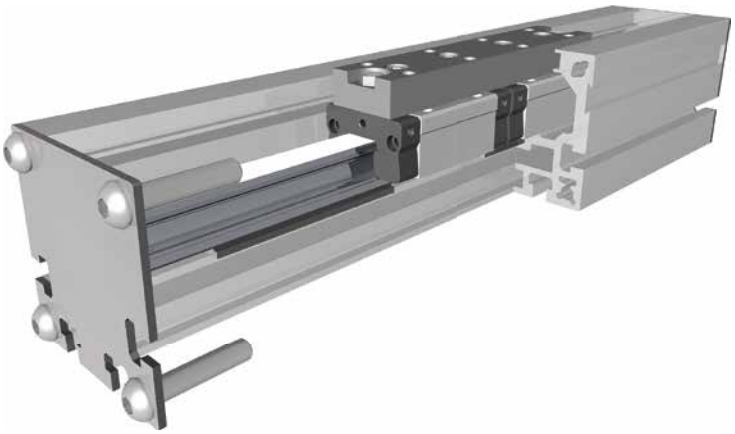

**Function:**
The guide body consists of an aluminium square profile, with an integrated rail guide. This rail guide can be driven by a pneumatic cylinder or other additional drives or it serves as a load carrying slide unit. Construction compatible with LSZ/LSN.

**Fitting position:** As required. Max. length 6.000 mm without joints.
**Carriage mounting:** By tapped holes.
**Unit mounting:** By T-slots and mounting sets. The linear axis can be combined with any T-slot profile.
**Carriage support:** In the standard version the carriage is positioned on two runner blocks which can be readjusted and maintained at each central servicing position. Two grease nipples at the carriage enable relubrication of the positioning system.

**Forces and torques**

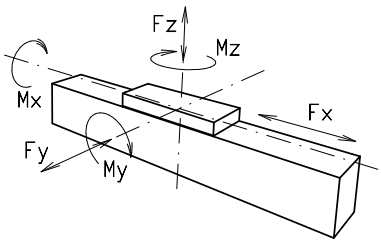


| Size | 60 | | 80 | |
|---|---|---|---|---|
| **permitted dyn. Forces*** | 5000 km | 10000 km | 5000 km | 10000 km |
| $F_x$ (N) | -- | -- | -- | -- |
| $F_y$ (N) | 1410 | 990 | 3570 | 2550 |
| $F_z$ (N) | 3520 | 2500 | 8500 | 6050 |
| $M_x$ (Nm) | 33 | 23 | 107 | 75 |
| $M_y$ (Nm) | 104 | 73 | 310 | 222 |
| $M_z$ (Nm) | 100 | 70 | 296 | 210 |
| **All forces and torques related to the following:** existing values / table values $\frac{Fy}{Fy_{dyn}} + \frac{Fz}{Fz_{dyn}} + \frac{Mx}{Mx_{dyn}} + \frac{My}{My_{dyn}} + \frac{Mz}{Mz_{dyn}} \leq 1$ | | | | |
| **No-load torque** | | | | |
| Nm | 0,6 | | 1,0 | |
| **Speed** | | | | |
| (m/s) max | 5 | | 5 | |
| **Tensile force** | | | | |
| permanent (N) | 1050 | | 1900 | |
| 0,2 s (N) | 1150 | | 2090 | |
| **Geometrical moments of inertia of aluminium profile** | | | | |
| $I_x$ mm$^4$ | $4{,}37 \times 10^5$ | | $14{,}6 \times 10^5$ | |
| $I_y$ mm$^4$ | $5{,}78 \times 10^5$ | | $17{,}1 \times 10^5$ | |
| Elastic modulus N/mm$^2$ | 70000 | | 70000 | |

*For life-time calculation use our homepage.*

** referred to life-time*

Deflection:

$$f = \frac{F * L^3}{E * I * 192}$$

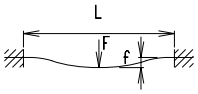


f = deflection (mm)
F = load (N)
L = free length (mm)
E = elastic modulus 70000 (N/mm$^2$)
I = second moment of area (mm$^4$)

Our policy is one of continued research and development.
We therefore reserve the right to amend,without notice, the specifications given in this document. © 2023 Bahr Modultechnik GmbH

# Linear system **LSR 60, 80**

Dimensions (mm)

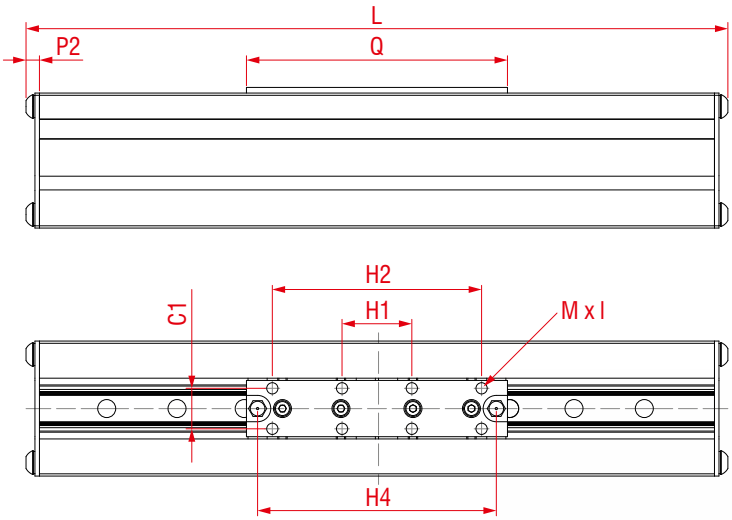


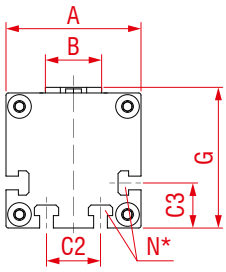


2 cupped-type lubricating nipples for each carriage

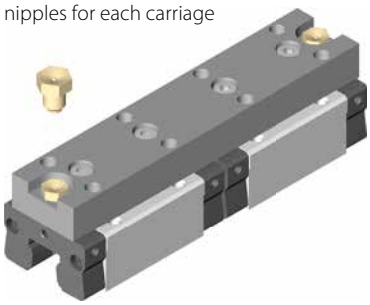

Hose connections available on request.

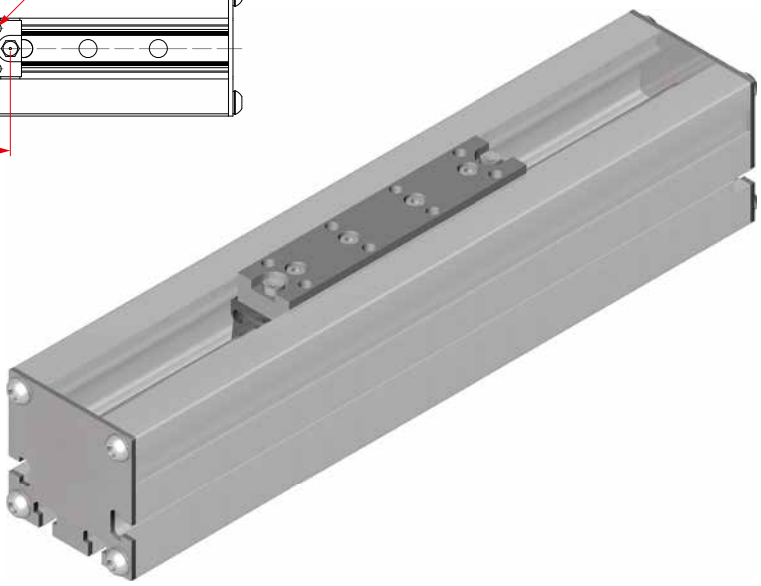

| Size ❒ | Basic lenght L | A ❒ | B | C1 | C2 | C3 | G | H1 | H2 | H4 | MxI | N for | P2 | Q | Basic weight | Weight per 100 mm |
|---|---|---|---|---|---|---|---|---|---|---|---|---|---|---|---|---|
| **LSR** 60 | 162 | 60 | 25 | 18 | 24 | 20 | 62,5 | 31 | 93 | 106 | M6 x 11 | M5 | 6 | 116 | 1,54 kg | 0,43 kg |
| **LSR** 80 | 166 | 80 | 25 | 18 | 30 | 22 | 83 | 40 | 120 | 133 | M6 x 12 | M6 | 8 | 149 | 2,19 kg | 0,88 kg |

**0** **Choice of guide body profile:**
**(0)** Standard **(1)** corrosion-protected screws
**(4)** expanded corrosion-protected version (depending on the availability of components)

**0** **Choice of carriages:**

**(0)**

| LSR | 60 | 0 | 0 | 0 | 0 | 0 | 0 | 0 | 1500 |
|---|---|---|---|---|---|---|---|---|---|
| | Pos. | 1 | 2 | 3 | 4 | 5 | 6 | 7 | |

Basic length + stroke = total length

Sample ordering code:
LSR60, standard body profile, standard carriage, 1338 mm stroke

Our policy is one of continued research and development.
We therefore reserve the right to amend,without notice, the specifications given in this document. © 2023 Bahr Modultechnik GmbH