Linear system **LLR 40, 60, 80**

TECHNICAL SUMMARY
REFERENCE ONLY

ROLLER GUIDE

- WITHOUT DRIVE
- SUPPORT UNIT
- WITHOUT COVERBAND

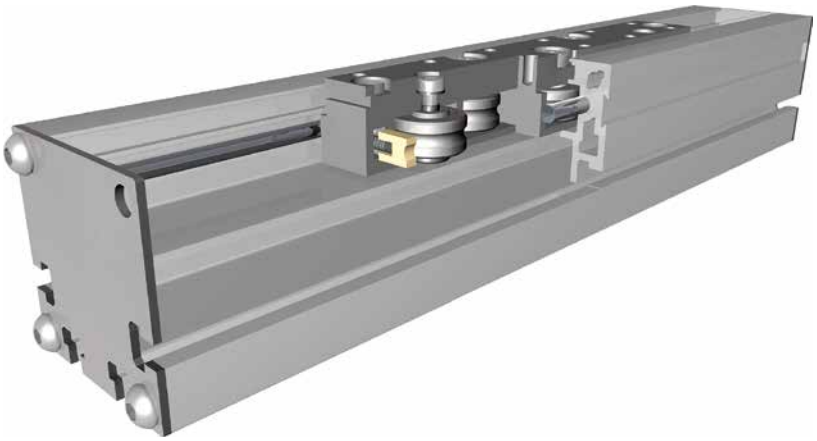

Function:
The guide body consists of an aluminium square profile, with an integrated roller guide. This roller guide can be driven by a pneumatic cylinder or other additional drives or it serves as a load carrying slide unit. Construction compatible with LLZ/LLN.

Fitting position: As required. Max. length 6.000 mm without joints.
Carriage mounting: By tapped holes.
Unit mounting: By T-slots and mounting sets. The linear axis can be combined with any T-slot profile.
Carriage support: The carriage runs on 5 rollers which can be adjusted and serviced at each central servicing position. Two grease nipples at the carriage enable relubrication of the positioning system.

Forces and torques

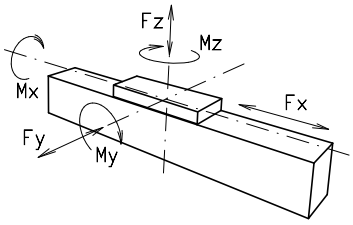

Size	40		60		80	
Forces/Torques	static	dynamic	static	dynamic	static	dynamic
F_x (N)	---	---	---	---	---	---
F_y (N)	130	65	780	650	1900	1500
F_z (N)	400	210	1170	845	2100	1700
M_x (Nm)	3	1	20	13	85	60
M_y (Nm)	13	6	78	65	140	110
M_z (Nm)	24	12	52	39	110	90

All forces and torques related to the following:

existing values / table values: $\frac{Fy}{Fy_{dyn}} + \frac{Fz}{Fz_{dyn}} + \frac{Mx}{Mx_{dyn}} + \frac{My}{My_{dyn}} + \frac{Mz}{Mz_{dyn}} \leq 1$

No-load torque			
Nm	0,4	0,6	0,8
Speed			
(m/s) max	4	6	10
Tensile force			
permanent (N)	---	1050	1900
0,2 s (N)	---	1150	2090
Geometrical moments of inertia of aluminium profile			
I_x mm^4	$1{,}01 \times 10^5$	$4{,}47 \times 10^5$	$15{,}83 \times 10^5$
I_y mm^4	$1{,}31 \times 10^5$	$5{,}59 \times 10^5$	$20{,}68 \times 10^5$
Elastic modulus N/mm^2	70000	70000	70000

For life-time calculation of rollers use our homepage.

Deflection:

$$f = \frac{F * L^3}{E * I * 192}$$

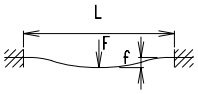

f = deflection (mm)
F = load (N)
L = free length (mm)
E = elastic modulus 70000 (N/mm^2)
I = second moment of area (mm^4)

Our policy is one of continued research and development.
We therefore reserve the right to amend,without notice, the specifications given in this document. © 2023 Bahr Modultechnik GmbH

Linear system **LLR 40, 60, 80**

Dimensions (mm)

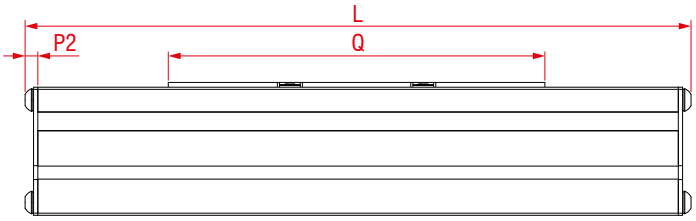

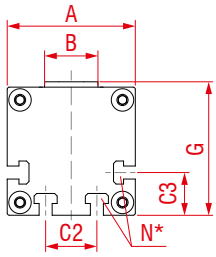

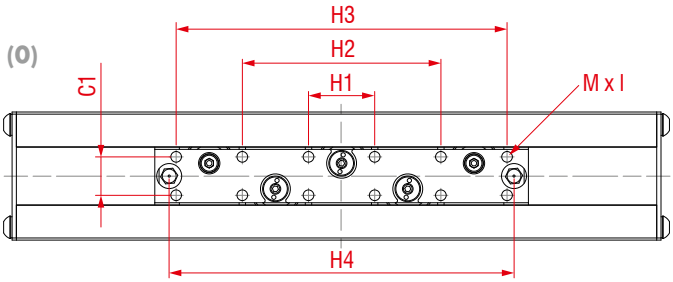

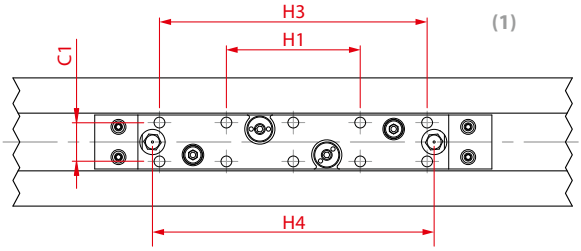

2 cupped-type lubricating nipples for each carriage

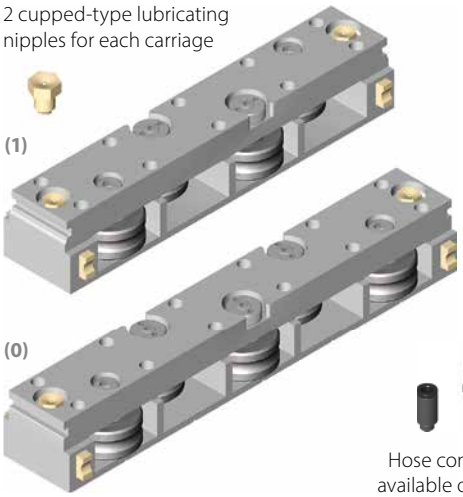

Hose connections available on request.

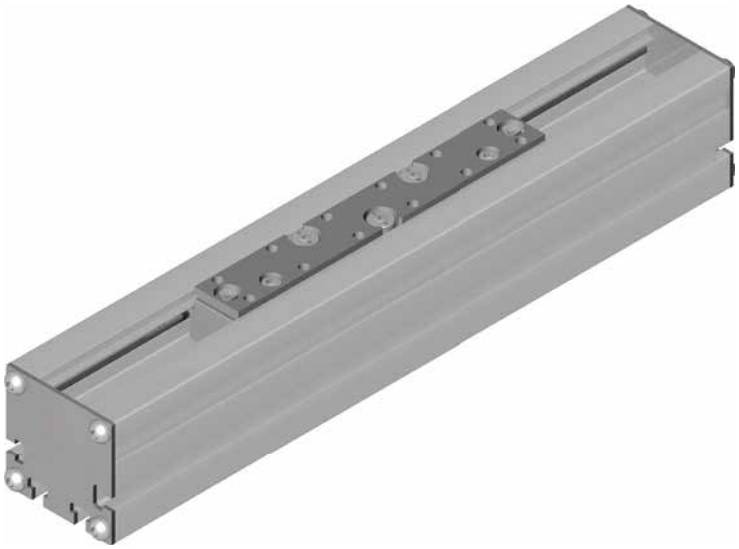

Size ❒	Basic lenght L	A ❒	B	C1	C2	C3	G	Mxl	N for	P2	Q	Basic weight	Weight per 100 mm
LLR 40	107	40	15	10	12	14	42	M4	M4	4	98	0,371 kg	0,212 kg
LLR 60	187	60	25	18	24	20	62,5	M6	M5	6	175	1,145 kg	0,377 kg
LLR 80	337	80	25	18	30	22	83	M6	M6	9	320	4,110 kg	0,730 kg

0 **Choice of guide body profile:**
(0) Standard **(2)** corrosion-protected guide rods and screws
(4) expanded corrosion-protected version (depending on the availability of components)

0 **Choice of carriages:**

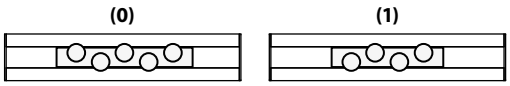

Carriage	L	Q1	H1	H2	H3	H4
LL 40 Version (0)	129	120	21	63	105	111
LL 40 Version (1)	107	98	42	---	84	90
LL 60 Version (0)	187	175	31	93	155	161,5
LL 60 Version (1)	158	144	62	---	124	130,5
LL 80 Version (0)	337	320	30	90	150	305
LL 80 Version (1)*	277	260	40	120	200	245

* Hole pattern like version (0)

LLR	60	0	0	0	0	0	0	0	1500
	Pos.	1	2	3	4	5	6	7	

Basic length + stroke = total length

Sample ordering code:
LLR60, standard body profile, carriage (0), 1312 mm stroke

Our policy is one of continued research and development.
We therefore reserve the right to amend,without notice, the specifications given in this document. © 2023 Bahr Modultechnik GmbH