Linear system **E 40, 60, 60S, 80, 80S**

TECHNICAL SUMMARY
REFERENCE ONLY

ROLLER GUIDE UNIT WITHOUT DRIVE

SPACE SAVING

Function:
Very low building system achieved by an aluminium guide body with integrated, hardened steel guide rods. The carriage, which has internal linear ball bearings that can be adjusted free of play, moves along the body.

Fitting position: As required, max. length 6.000 mm.
Carriage connection: By T-slots.
Unit mounting: By tapped holes in the mounting surface, bottom surface with T-slots.

Forces and torques

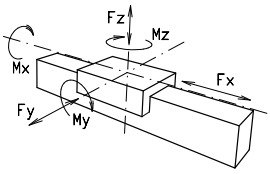

Size	E 40		E 60		E 60 S		E 80		E 80S	
Forces/Torques	static	dynamic	static	dynamic	static	dynamic	static	dynamic	static	dynamic
F_x (N)	-	-	-	-	-	-	-	-	-	-
F_y (N)	1200	700	3000	2000	4100	3100	3000	2000	4600	3600
F_z (N)	900	650	1700	1100	2160	1600	1700	1100	3000	1800
M_x (Nm)	25	20	67	43	88	65	90	55	170	140
M_y (Nm)	32	18	90	70	190	140	110	80	270	230
M_z (Nm)	35	25	120	100	230	170	150	120	300	220

All forces and torques relate to the following:
existing values / table values

$$\frac{Fy}{Fy_{dyn}} + \frac{Fz}{Fz_{dyn}} + \frac{Mx}{Mx_{dyn}} + \frac{My}{My_{dyn}} + \frac{Mz}{Mz_{dyn}} \leq 1$$

Speed					
max. (m/s)	4	5	**5**	6	8
Geometrical moments of inertia of aluminium profile					
I_x mm^4	0,157x10^5	1,71x10^5	1,71x10^5	2,8x10^5	2,8x10^5
I_y mm^4	0,654x10^5	6,1x10^5	6,1x10^5	10,59x10^5	10,59x10^5
E-Modulus N/mm^2	70000	70000	70000	70000	70000

For life-time calculation of rollers use our homepage.

Deflection:

$$f = \frac{F * L^3}{E * I * 192}$$

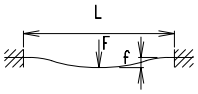

f = deflection (mm)
F = load (N)
L = free length (mm)
E = elastic modulus 70000 (N/mm^2)
I = second moment of area (mm^4)

Our policy is one of continued research and development.
We therefore reserve the right to amend,without notice, the specifications given in this document. © 2023 Bahr Modultechnik GmbH

Linear system **E 40, 60, 60S, 80, 80S**

Dimensions (mm)

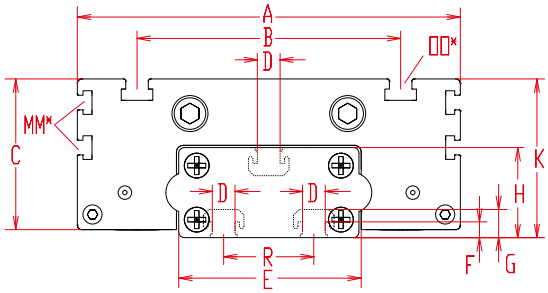

Size 80

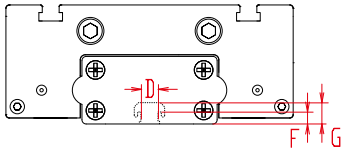

Size 40, 60

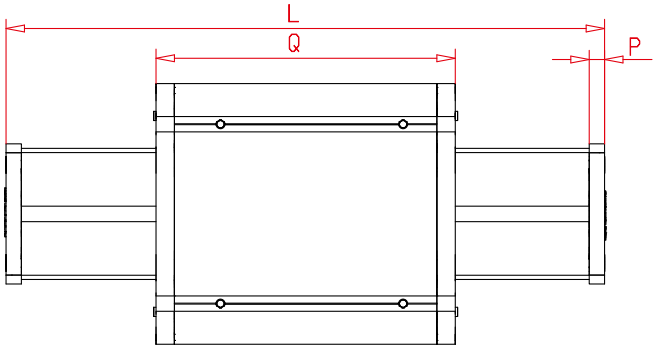

Increasing the carriage length will increase the basic length by the same amount.

Size	Basic length L	A	B	C	D	E	F	G	H	K	MM for	OO for	P	Q	R	Basic weight	Weight per 100 mm
E 40	136	100	66	34,5	10	40	7	12,5	22	37	-	M 6	6	122	-	1,0 kg	0,13 kg
E 60	186	144	96	48	10	60	7	12,5	30	49	-	M 8	8	168	-	2,2 kg	0,20 kg
E 60S	212	170	108	52	10	60	7	12,5	30	53	-	M 8	8	194	-	3,2 kg	0,20 kg
E 80	215	170	117	66,5	10	80	7	12,5	40	70	M 6	M 10	10	194	40	3,4 kg	0,48 kg
E 80S	245	190	126	67,5	10	80	7	12,5	40	71	M 6	M 8	10	214	40	4,4 kg	0,48 kg

0 **Choice of guide body profile:**
(0) Standard **(2)** corrosion-protected guide rods and screws
(4) expanded corrosion-protected version (depending on the availability of components)

E	40	0	0	0	0	0	0	0	1500
	Pos.	1	2	3	4	5	6	7	

Basic length + stroke = total length

Sample ordering code:
E 40, non driven system, standard body profile, 1364 mm stroke

Our policy is one of continued research and development.
We therefore reserve the right to amend,without notice, the specifications given in this document. © 2023 Bahr Modultechnik GmbH