Linear system **DSR 120, 160, 200**

TECHNICAL SUMMARY
REFERENCE ONLY

RAIL GUIDE

- WITHOUT DRIVE
- SUPPORT UNIT

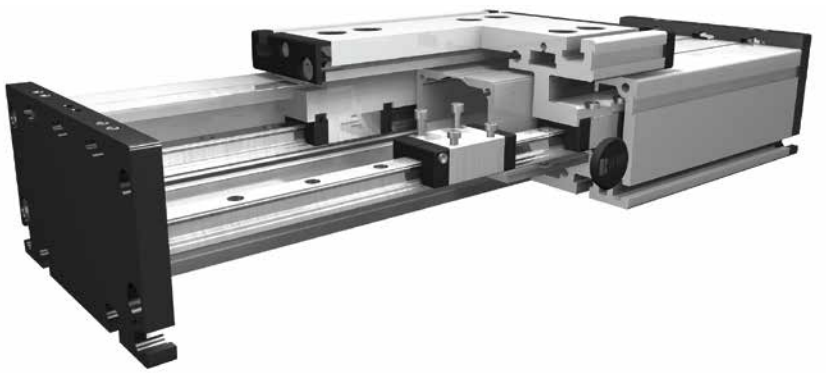

Function:
This unit consists of a rectangular aluminium profile with 2 integrated rail guidess. The openings of the guide body are sealed with 3 stainless steel cover bands to protect the guide from splash water and dust. Alternatively, it can also be supplied without cover bands. The positioning system can be either driven by an internal pneumatic cylinder or other additional drives or it serves as load carrying linear slide. Construction compatible with DSZ.

Fitting position: As required. Max. length 6.000 mm without joints.
Carriage mounting: By T-slots.
Unit mounting: By T-slots and mounting sets. The linear axis can be combined with any T-slot profile.
Carriage support: In the standard version, the carriage runs on 4 runner blocks which can be adjusted and serviced at a central servicing position. For longer carriages the number of runner blocks can be increased.

Forces and torques

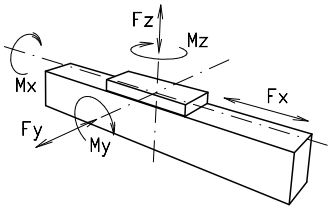

Size	120		160		200	
permitted dyn. Forces*	5000 km	10000 km	5000 km	10000 km	5000 km	10000 km
F_y (N)	1776	1405	5570	3900	15600	11080
F_z (N)	2090	1650	7050	5020	20600	14600
M_x (Nm)	81	64	358	255	1285	915
M_y (Nm)	97	77	369	262	1375	980
M_z (Nm)	96	76	364	258	1345	960
All forces and torques related to the following: existing values / table values $\frac{Fy}{Fy_{dyn}} + \frac{Fz}{Fz_{dyn}} + \frac{Mx}{Mx_{dyn}} + \frac{My}{My_{dyn}} + \frac{Mz}{Mz_{dyn}} \leq 1$						
Speed						
(m/s) max	5		5		5	
Geometrical moments of inertia of aluminium profile						
I_x mm^4	$5{,}61 \times 10^5$		$2{,}13 \times 10^6$		$4{,}81 \times 10^6$	
I_y mm^4	$34{,}19 \times 10^5$		$12{,}33 \times 10^6$		$26{,}0 \times 10^6$	
Elastic modulus N/mm^2	70000		70000		70000	

For life-time calculation use our homepage.

** referred to life-time*

Deflection:

$$f = \frac{F * L^3}{E * I * 192}$$

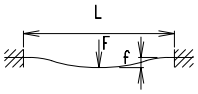

f = deflection (mm)
F = load (N)
L = free length (mm)
E = elastic modulus 70000 (N/mm^2)
I = second moment of area (mm^4)

Our policy is one of continued research and development.
We therefore reserve the right to amend,without notice, the specifications given in this document. © 2023 Bahr Modultechnik GmbH

Linear system **DSR 120, 160, 200**

Dimensions (mm)

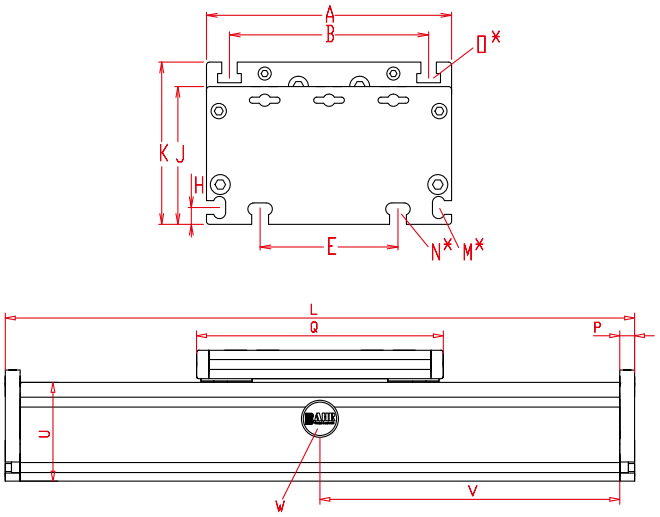

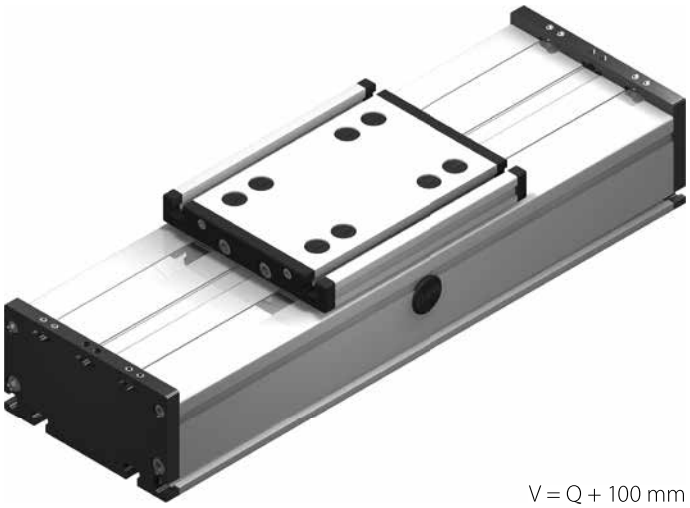

V = Q + 100 mm
W = servicing position

Increasing the carriage length will increase the basic length by the same amount.

Size	Basic length L	A	B	E	H	J	K	M for	N for	O for	P	Q	U	Basic weight	Weight per 100 mm
DSR 120	200	120	96	78	10	68	79	M 5	M 6	M 6	10	156	60	3,2 kg	0,71 kg
DSR 160	240	160	130	90	11	90	106	M 6	M 8	M 8	12	200	80	7,0 kg	1,5 kg
DSR 200	320	200	160	140	15	110	129	M 8	M 10	M 10	15	270	100	15,0 kg	2,9 kg

0 **Choice of guide body profile:** Stainless versions upon request.

(0)

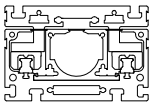

internal profile
with cover bands

(1)

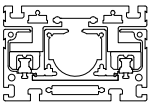

internal profile
without cover bands

(2)

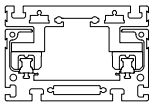

without internal profile
and cover bands

0 **Choice of carriages:**

(0)

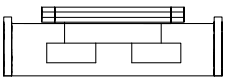

(1)

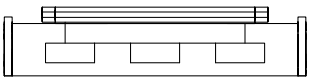

Size	Version 0		Version 1	
	Q	L	Q	L
120	156	200	156	200
160	200	240	>230	>270
200	270	320	>310	>360

DSR	160	0	0	0	0	0	0	0	1500
	Pos.	1	2	3	4	5	6	7	

Basic length + stroke = total length

Sample ordering code:
DSR160, with internal profile and cover bands, standard runner blocks, 1260 mm stroke.

Our policy is one of continued research and development.
We therefore reserve the right to amend,without notice, the specifications given in this document. © 2023 Bahr Modultechnik GmbH