BAHR Modultechnik

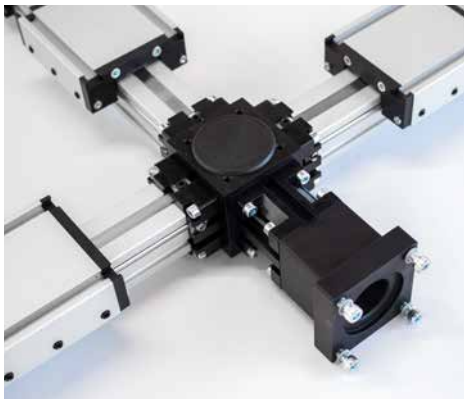

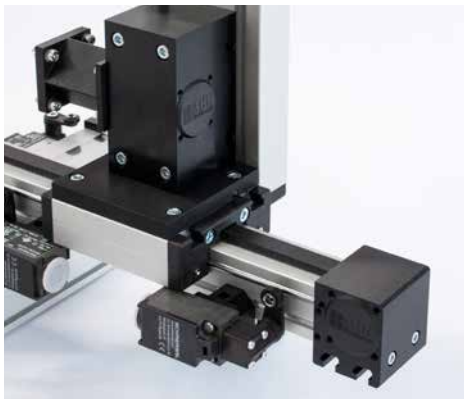

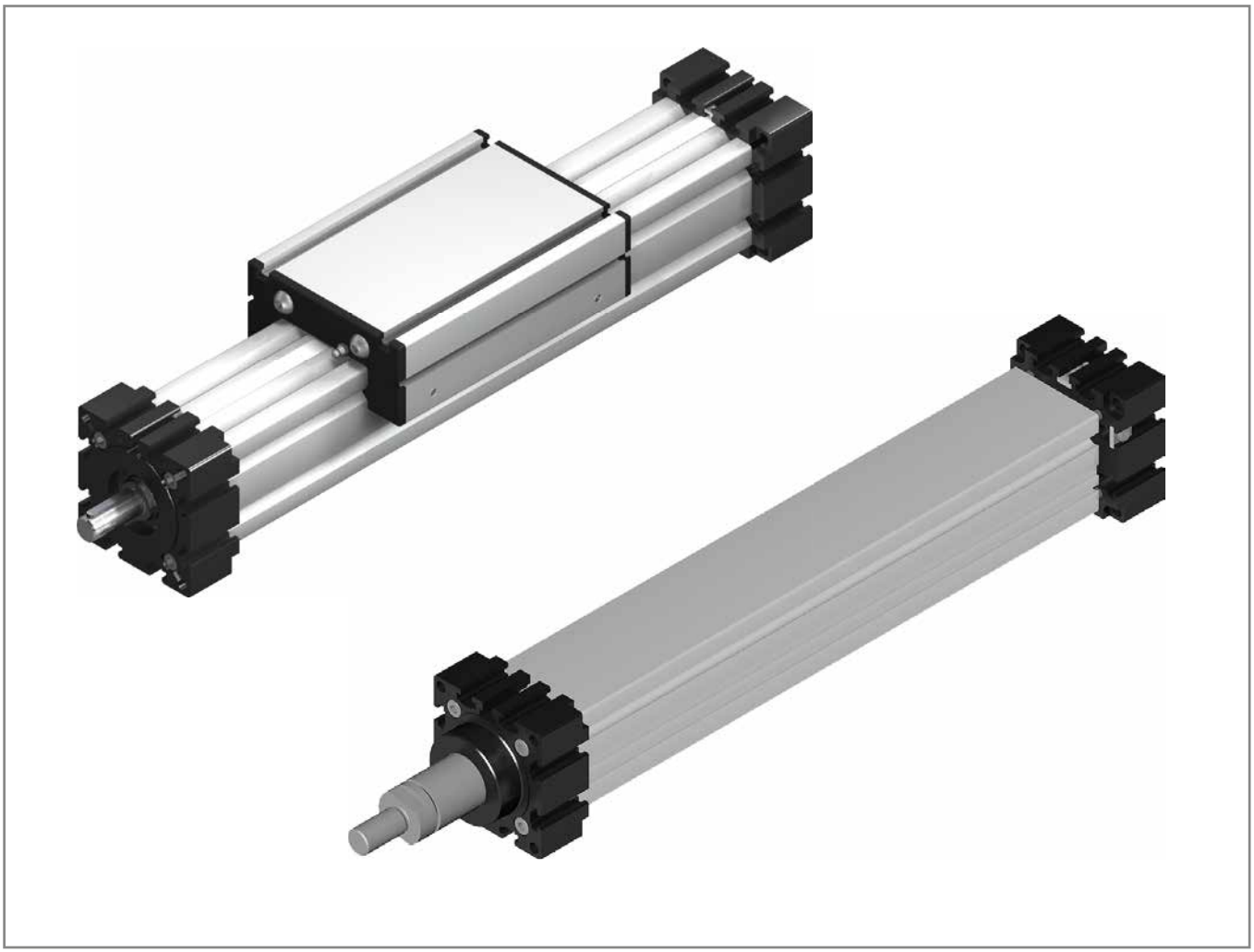

GG | EG | EH | EL

Trapezoidal or ballscrew spindle driven

Linear system **GGT/K 90**

1.1

SPINDLE DRIVEN

- SLIDE UNIT
- LIFTING SYSTEM
- IF DESIGN AWARD 2017
- EASY CLEANING

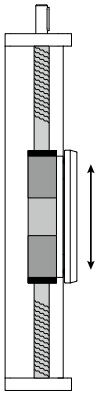

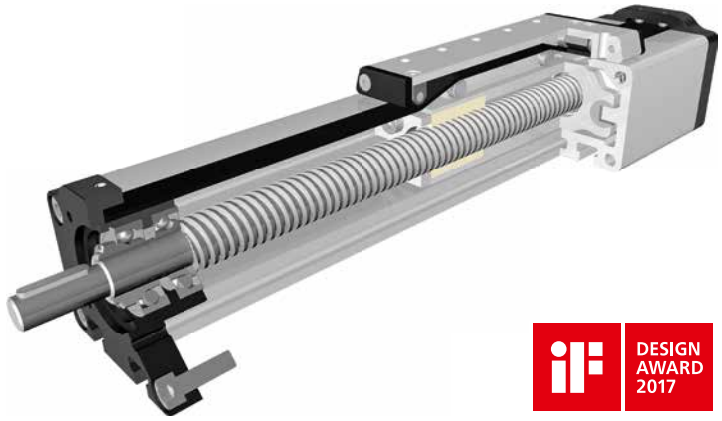

DESIGN AWARD 2017

Function:
Optimized spindle axis for wheelchair lifting systems, lifting platforms and other lifting applications. The guide body consists of an aluminium square profile with an integrated sliding guide. The plastic slide bushes integrated in the carriage ensure a very low friction resistance on anodized aluminium. The carriage is moved by means of a rotating thread spindle with an assigned follower nut. The opening in the guide body is closed by a plastic cover band. This plastic cover band is abrasion-free and is pressed into the profile by means of ball bearings.

Fitting position: As required. Max. length 3.000 mm
Carriage mounting: By tapped holes in the carriage.
Unit mounting: By T-slots or tapped holes in the bearing block and mounting sets.

Forces and torques

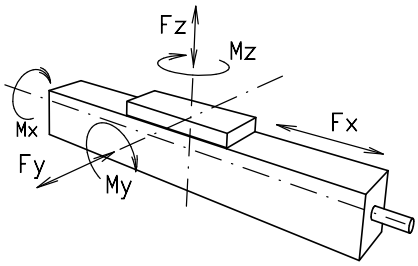

Size	GGT/K 90	
Forces / Torques	static	dynamic
F_x (N)	4200	3500
F_y (N)	1000	900
F_z (N)	1125	1000
M_x (Nm)	82	75
M_y (Nm)	220	200
M_z (Nm)	165	150
All forces and torques relate to the following:		
existing values / table values	$\frac{Fy}{Fy_{dyn}} + \frac{Fz}{Fz_{dyn}} + \frac{Mx}{Mx_{dyn}} + \frac{My}{My_{dyn}} + \frac{Mz}{Mz_{dyn}} \leq 1$	
No-load torque		
Trapezoidal thread	24x5	24x10
(Nm)	0,50	0,80
Ballscrew	25x5	25x10
(Nm)	0,40	0,60
Geometrical moments of inertia of aluminium profile		
I_x mm^4	11,05x10^5	
I_y mm^4	23,60x10^5	
Elastic-modulus N/mm^2	70000	

Driving torque:

$$M_a = \frac{F * P * S_i}{2000 * \pi * \mu} + M_n$$

$$P_a = \frac{M_a * n}{9550}$$

F	= force	(N)
P	= thread pitch	(mm)
Si	= safety factor 1,2 … 2	
M_n	= no-load torque	(Nm)
n	= rpm of screw	(min^{-1})
M_a	= driving torque	(Nm)
μ	= screw efficiency	
P_a	= motor power	(KW)

Efficiency of lead screws:

All ballscrew 0,900

Tr 24x5 0,384
Tr 24x10 0,550

Deflection:

$$f = \frac{F * L^3}{E * I * 192}$$

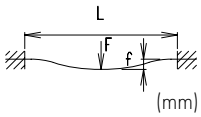

f	= deflection	(mm)
F	= load	(N)
L	= free length	(mm)
E	= elastic modulus 70000	(N/mm^2)
I	= second moment of area	(mm^4)

For the diagram for critical speeds of lead screws refer to chapter 4.2

Linear system **GGT/K 90**

Dimensions (mm)

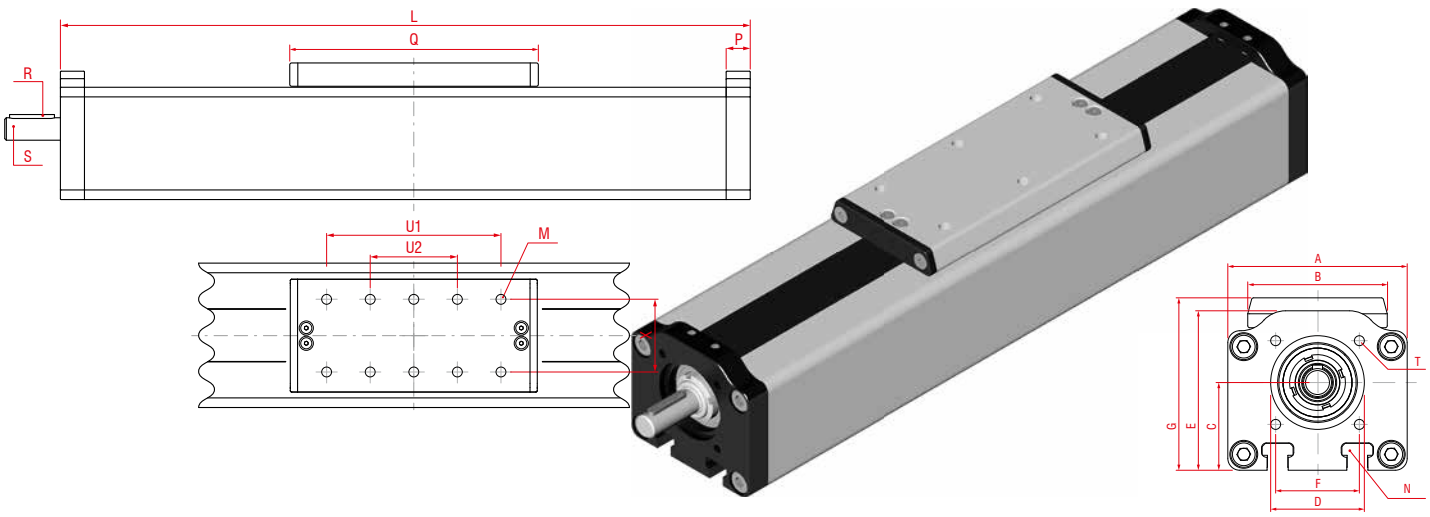

*For slide nuts refer to chapter 2.2 page 2

Increasing the carriage length will increase the basic length by the same amount.

Size	Basic length L	A	B	C	D -0,05	E	F ❐	G	H	M	N for	P1	P2	Q	Shaft R key	Shaft S Ø h6 x length	T for	U1	X	Basic weight	Weight per 100 mm
GGT/K 90	242	90	78	44	47	80	42	87	40	M8	M8	15	36	170	5x5x28	14x35	M6	120	50	4,5 kg	1,134 kg

T **Spindle:**
(T) Trapezoidal thread **(K)** Ballscrew

1 **Selection of screw:**
(1) right hand (Standard) **(2)** left hand (Ballscrew by inquiry)

0 **Choice of guide body profile:**
(0) Standard **(1)** corrosion-protected screws
(4) expanded corrosion-protected version (depending on the availability of components)

0 **Choice of carriages:**

(0)

0 **Drive version:**
(0) right (locating bearing side) **(1)** left (non-locating bearing side) **(2)** shaft on both sides

0

Selection of screw:

Size	Standard	Multistart screw	Standard	Multistart screw	
				Tr = trapezoidal thread / Kg = ballscrew	
90	**(0)** Tr 24x5	**(1)** Tr 24x10	**(0)** Kg 25x5	**(1)** Kg 25x10	**(2)** Kg 20x20

0 **Ballscrew pitch accuracy:** (only ballscrew)
(0) 0,05 mm / 300 mm **(2)** 0,025 mm / 300 mm

0 **End play of ball nut:** (only ballscrew)
(0) 0,04 mm (Standard), **(1)** < 0,02 mm, **(2)** 2% apply prestress

GG	T	90	1	0	0	0	0	0	0	1500
		Pos.	1	2	3	4	5	6	7	

Basic length + stroke = total length

Sample ordering code:
GGT 90, trapezoidal thread right hand thread, standard body profile, carriage version 0, drive version 0, spindle Tr 24x5, 1258 mm stroke

Linear system **GGK 90**

1.1

SPINDLE DRIVEN

- EX-GUIDE
- LIFTING SYSTEM
- IF DESIGN AWARD 2017
- EASY CLEANING
- SMOOTH SURFACES

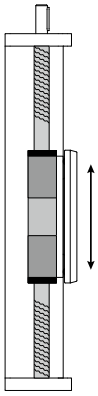

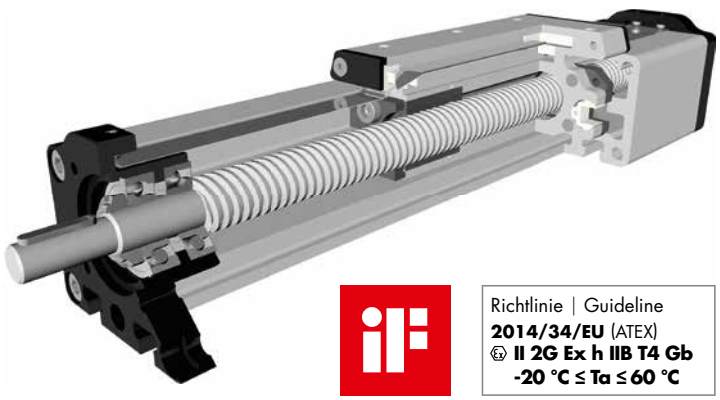

Richtlinie | Guideline
2014/34/EU (ATEX)
II 2G Ex h IIB T4 Gb
-20 °C ≤ Ta ≤ 60 °C

Function:
Optimized spindle axis for wheelchair lifting systems, lifting platforms and other lifting applications. The guide body consists of an aluminium square profile with an integrated sliding guide. The plastic slide bushes integrated in the carriage ensure a very low friction resistance on anodized aluminium. The carriage is moved by means of a rotating thread spindle with an assigned follower nut. The opening in the guide body is closed by a cover band. This cover band prevents dust and dirt from getting inside, it also offers a high level of safety and protects against hand injuries.

The products can be used as follows, according to the marking:
a) In Zone 2 (Gas, Category 3G, EPL Gc) in explosion groups IIA and IIB
b) In Zone 1 (Gas, Category 2G, EPL Gb) in explosion groups IIA and IIB
The qualification with regard to the surface temperature is T4; for all gases, vapours and mists with an ignition temperature > 125 °C the product is not an ignition source.

Fitting position: As required. Max. length 1.500 mm
Carriage mounting: By tapped holes in the carriage.
Unit mounting: By T-slots or tapped holes in the bearing block and mounting sets.

Forces and torques

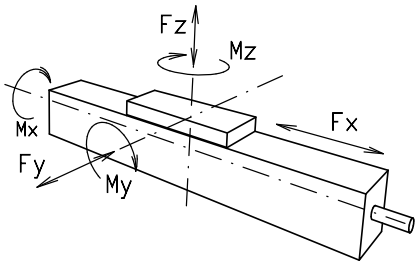

Size	**90**	
Forces / Torques	static	dynamic
F_x (N)	1000	1500
F_y (N)	1000	900
F_z (N)	1125	1000
M_x (Nm)	67	62
M_y (Nm)	180	165
M_z (Nm)	135	124
All forces and torques relate to the following:		
existing values / table values	$\frac{Fy}{Fy_{dyn}} + \frac{Fz}{Fz_{dyn}} + \frac{Mx}{Mx_{dyn}} + \frac{My}{My_{dyn}} + \frac{Mz}{Mz_{dyn}} \leq 1$	
No-load torque		
Ballscrew	25x10	
(Nm)	0,60	
Geometrical moments of inertia of aluminium profile		
I_x mm^4	11,05x10^5	
I_y mm^4	23,60x10^5	
Elastic-modulus N/mm^2	70000	

Driving torque:

$$M_a = \frac{F * P * S_i}{2000 * \pi * \mu} + M_n$$

$$P_a = \frac{M_a * n}{9550}$$

F	= force	(N)
P	= thread pitch	(mm)
Si	= safety factor 1,2 … 2	
M_n	= no-load torque	(Nm)
n	= rpm of screw	(min^{-1})
M_a	= driving torque	(Nm)
μ	= screw efficiency	
P_a	= motor power	(KW)

Efficiency of lead screws:

All ballscrew 0,900

Deflection:

$$f = \frac{F * L^3}{E * I * 192}$$

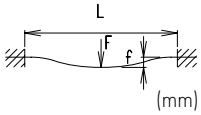

f	= deflection	(mm)
F	= load	(N)
L	= free length	(mm)
E	= elastic modulus 70000	(N/mm^2)
I	= second moment of area	(mm^4)

Linear system **GGK 90** Ex

Dimensions (mm)

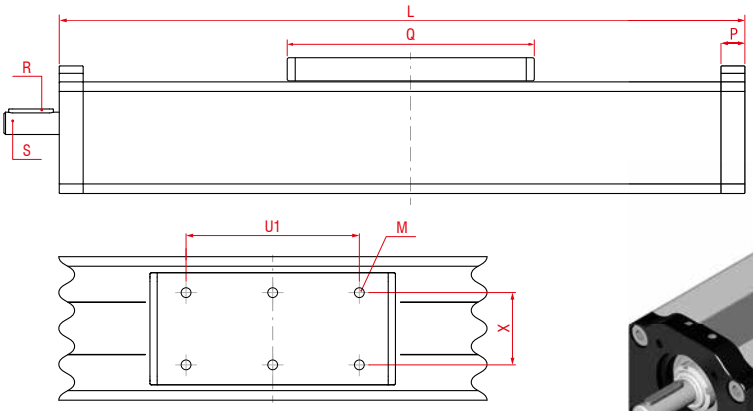

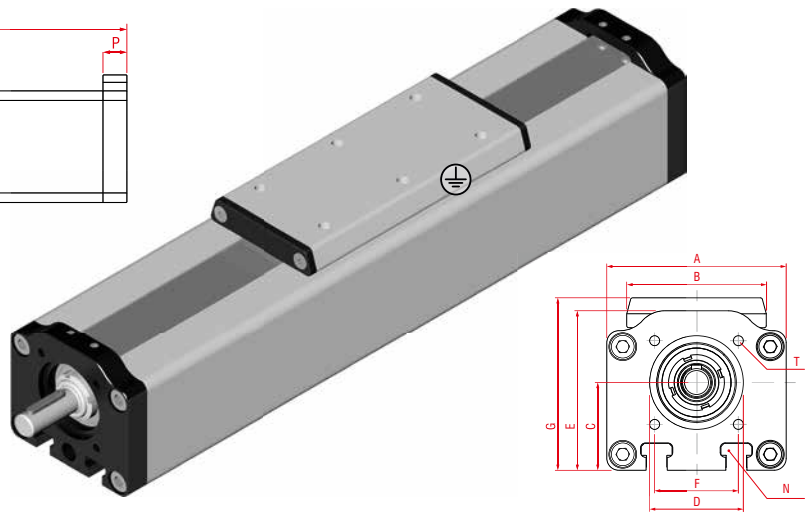

Richtlinie | Guideline
2014/34/EU (ATEX)
Ex II 2G Ex h IIB T4 Gb
-20 °C ≤ Ta ≤ 60 °C

*For slide nuts refer to chapter 2.2 page 2

Increasing the carriage length will increase the basic length by the same amount.

Size	Basic length L	A	B	C	D -0,05	E	F ❐	G	H	M	N for	P1	P2	Q	Shaft R key	Shaft S Ø h6 x length	T for	U1	X	Basic weight	Weight per 100 mm
GGKex 90	242	90	78	44	47	80	42	87	40	M8	M8	15	36	170	5x5x28	14x35	M6	120	50	4,5 kg	1,134 kg

K **Spindle:**
(K) Ballscrew

1 **Selection of screw:**
(1) right hand (Standard) **(2)** left hand (by inquiry)

0 **Choice of guide body profile:**
(0) Standard **(1)** corrosion-protected screws

0 **Choice of carriages:**
(0)

0 **Drive version:**
(0) right (locating bearing side)
(1) left (non-locating bearing side) **(2)** shaft on both sides

0 **Selection of screw:**
(0) Kg 25x10

0 **Ballscrew pitch accuracy:**
(0) 0,05 mm / 300 mm

0 **End play of ball nut:**
(0) 0,04 mm

GG	K	EX	90	1	0	0	0	0	0	0	1500
			Pos.	1	2	3	4	5	6	7	

Basic length + stroke = total length

Sample ordering code:
GGKex 90, ballscrew right hand, standard body profile, carriage version 0, drive version 0, spindle Kg 25x10, 1258 mm stroke

Safety-related limits:

- max. input speed 1500 min-1
- min. input speed 20 min-1
- nom. input torque 4 Nm
- max. starting torque 12.5 Nm
- max. static lifting power 1000 N
- max. dynamic lifting power 1500 N
- Operating modes S1
  - up to 120 full strokes per hour, evenly distributed
- stroke length 250 mm ..1500 mm
- Velocity 0.005 ms-1 .. 0.5 ms-1
- ambient temperature range -20 °C < Ta < 60 °C

Safety-related notes regarding lubrication:
In potentially explosive atmospheres, you may only use lubrication systems that comply with the applicable regulations and are authorised by Bahr. The maintenance intervals for the lubricators have to be observed (e. g. operating and mounting instructions for perma FLEX, if these are used).

Note that the system is not lubricated during the lubricator activation time! Before starting operation, ensure that the lubrication system is working flawlessly and check the activation documentation.

The lubrication line of the lubricator must not exceed 0.5 m in length. The lubricator and the lubrication line are pressurized. When performing maintenance work ensure that no air bubbles can form within the lubrication system, that the lubrication lines are not kinked and that the lubricator is not exposed to mechanical loads.

Preset dispensing time	Activation time
1 month	1 day
3 months	5 days
6 months	14 days
12 months	28 days

Linear system **GDGT/K 90**

1.1

SPINDLE DRIVEN

- SLIDE UNIT
- LIFTING SYSTEM
- HIGH RIGIDITY
- EASY CLEANING
- SMOOTH SURFACES

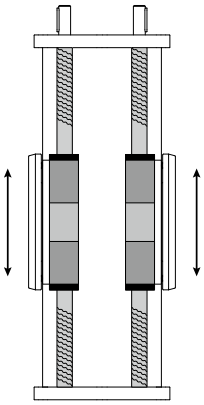

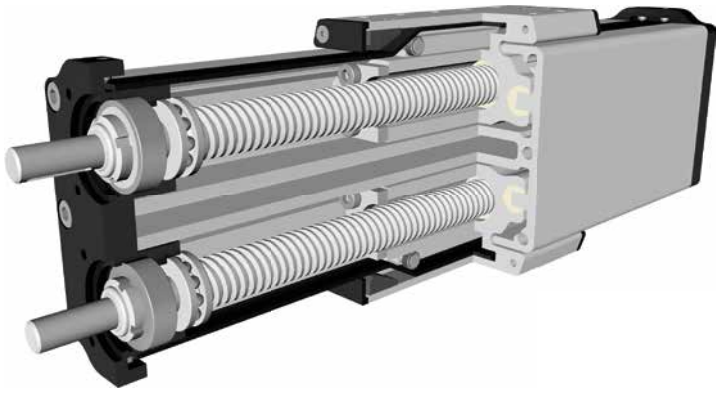

Function:
Optimized spindle axis for lift systems, bicycle assembly stands, lifting platforms and other lifting applications. The guide body consists of an aluminium profile with an integrated sliding guide. The plastic slide bushes integrated in the carriage ensure a very low friction resistance on anodized aluminium. The so-called double G profile ensures a very high stability. The carriage is moved by a rotating threaded spindle provided with a follower nut. The opening in the guide body is closed by a cover band made of plastic material. This plastic cover band is abrasion-free and is pressed into the profile by means of ball bearings.

Fitting position: As required. Max. length 3.000 mm
Carriage mounting: By tapped holes in the carriage.
Unit mounting: By T-slots or tapped holes in the bearing block.

Forces and torques

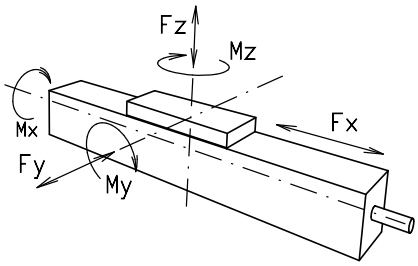

Size	90	
Forces / Torques	statisch	dynamisch
F_x (N)	4200	3500
F_y (N)	1000	900
F_z (N)	1125	1000
M_x (Nm)	82	75
M_y (Nm)	220	200
M_z (Nm)	165	150
All forces and torques relate to the following:		
existing values / table values	$\frac{Fy}{Fy_{dyn}} + \frac{Fz}{Fz_{dyn}} + \frac{Mx}{Mx_{dyn}} + \frac{My}{My_{dyn}} + \frac{Mz}{Mz_{dyn}} \leq 1$	
No-load torque		
Trapezoidal thread	24x5	24x10
(Nm)	0,50	0,80
Ballscrew	25x5	25x10
Nm	0,40	0,60
Geometrical moments of inertia of aluminium profile		
I_x mm^4	$4{,}1 \times 10^6$	
I_y mm^4	$4{,}0 \times 10^6$	
Elastic-modulus N/mm^2	70000	

Driving torque:

$$M_a = \frac{F * P * S_i}{2000 * \pi * \mu} + M_n$$

$$P_a = \frac{M_a * n}{9550}$$

F	= force	(N)
P	= thread pitch	(mm)
Si	= safety factor 1,2 … 2	
M_n	= no-load torque	(Nm)
n	= rpm of screw	(min^{-1})
M_a	= driving torque	(Nm)
μ	= screw efficiency	
P_a	= motor power	(KW)

Efficiency of lead screws:

All ballscrew 0,900

Tr 24x5 0,384
Tr 24x10 0,550

Deflection:

$$f = \frac{F * L^3}{E * I * 192}$$

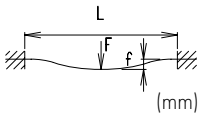

f	= deflection	(mm)
F	= load	(N)
L	= free length	(mm)
E	= elastic modulus 70000	(N/mm^2)
I	= second moment of area	(mm^4)

For the diagram for critical speeds of lead screws refer to chapter 4.2

Linear system **GDGT/K 90**

Dimensions (mm)

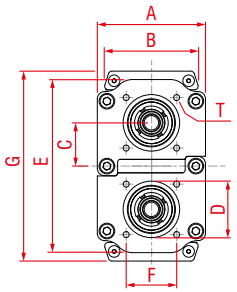

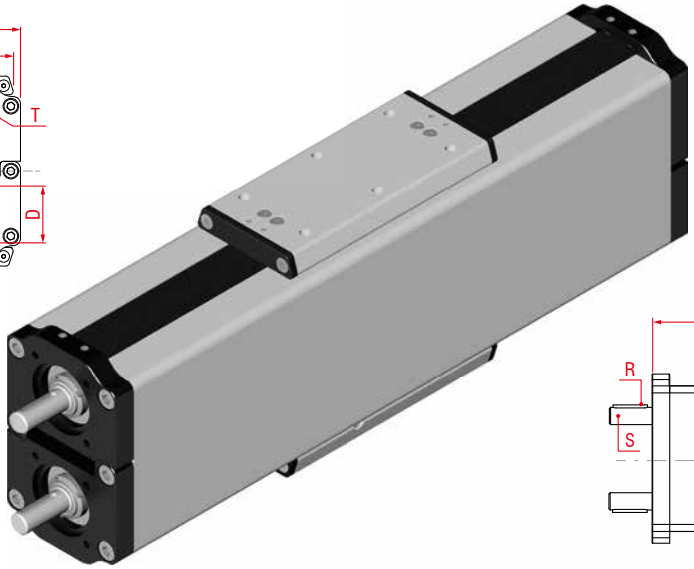

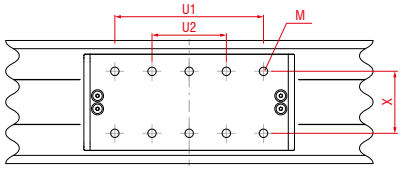

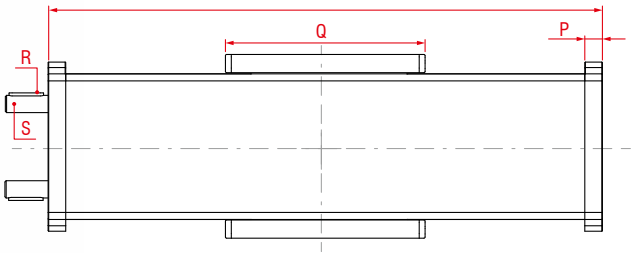

*For slide nuts refer to chapter 2.2 page 2

Increasing the carriage length will increase the basic length by the same amount.

Size	Basic length L	A	B	C	D -0,05	E	F ❒	G	M for	P1	P2	Q	Shaft R key	Shaft S Ø h6 x length	T for	U1	X	Basic weight	Weight per 100 mm
GDGT/K 90	242	90	78	36	47	144	42	158	M8	15	36	170	5x5x28	14x35	M6	120	50	7,8 kg	1,5 kg

T **Spindle:**
(T) Trapezoidal thread **(K)** Ballscrew

1 **Selection of screw:**
(1) right hand (Standard) **(2)** left hand (Ballscrew by inquiry)

0 **Choice of guide body profile:**
(0) Standard **(1)** corrosion-protected screws
(4) expanded corrosion-protected version, only for trapezoidal thread (on request)

0 **Choice of carriages:**

(0)

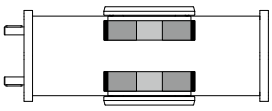

0 **Drive version:**
(0) right (locating bearing side) **(1)** left (non-locating bearing side) **(2)** shaft on both sides

0 **Selection of screw:**

Size	Standard	Multistart screw	Standard	Multistart screw	
				Tr = trapezoidal thread / Kg = ballscrew	
90	**(0)** Tr 24x5	**(1)** Tr 24x10	**(0)** Kg 25x5	**(1)** Kg 25x10	**(2)** Kg 20x20

0 **Ballscrew pitch accuracy:** (only ballscrew)
(0) 0,05 mm / 300 mm **(2)** 0,025 mm / 300 mm

0 **End play of ball nut:** (only ballscrew)
(0) 0,04 mm (Standard), **(1)** < 0,02 mm, **(2)** 2% apply prestress

GDG	T	90	1	0	0	0	0	0	0	1500
		Pos.	1	2	3	4	5	6	7	

Basic length + stroke = total length

Sample ordering code:
GDGT 90, trapezoidal thread right hand thread, carriage version 0, drive version 0, spindle Tr 24x5, 1258 mm stroke

Linear system **GDGK 90** Ex

1.1

SPINDLE DRIVEN

- EX-GUIDE
- LIFTING SYSTEM
- HIGH RIGIDITY
- EASY CLEANING
- SMOOTH SURFACES

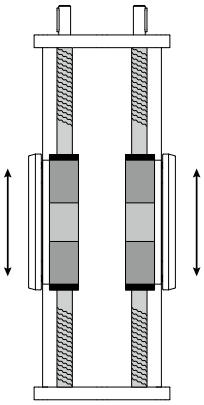

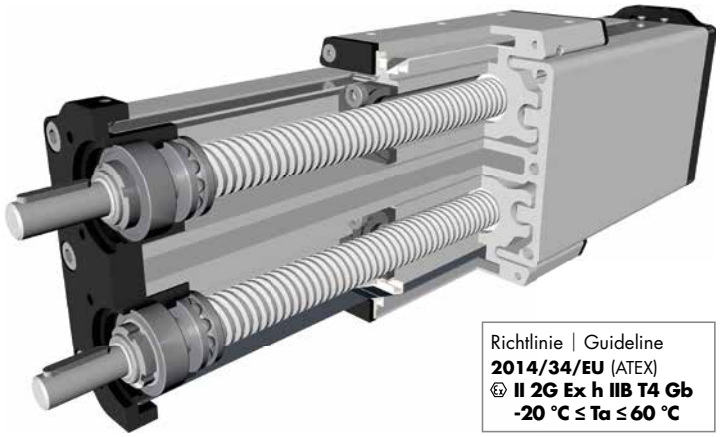

Richtlinie | Guideline
2014/34/EU (ATEX)
Ⓔx II 2G Ex h IIB T4 Gb
-20 °C ≤ Ta ≤ 60 °C

Function:
Optimized spindle axis for lift systems, bicycle assembly stands, lifting platforms and other lifting applications. The guide body consists of an aluminium profile with an integrated sliding guide. The plastic slide bushes integrated in the carriage ensure a very low friction resistance on anodized aluminium. The so-called double G profile ensures a very high stability. The carriage is moved by a rotating threaded spindle provided with a follower nut. The opening in the guide body is closed by a cover band. This cover band prevents dust and dirt from getting inside, it also offers a high level of safety and protects against hand injuries.

The products can be used as follows, according to the marking:
a) In Zone 2 (Gas, Category 3G, EPL Gc) in explosion groups IIA and IIB
b) In Zone 1 (Gas, Category 2G, EPL Gb) in explosion groups IIA and IIB
The qualification with regard to the surface temperature is T4; for all gases, vapours and mists with an ignition temperature > 125 °C the product is not an ignition source.

Fitting position: As required. Max. length 1.500 mm
Carriage mounting: By tapped holes in the carriage.
Unit mounting: By T-slots or tapped holes in the bearing block and mounting sets.

Forces and torques

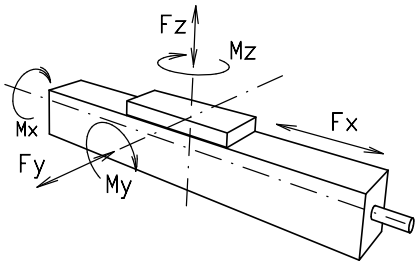

Size	**90**	
Forces / Torques	static	dynamic
F_x (N)	1000	1500
F_y (N)	1000	900
F_z (N)	1125	1000
M_x (Nm)	67	62
M_y (Nm)	180	165
M_z (Nm)	135	124
All forces and torques relate to the following:		
existing values / table values	$\frac{Fy}{Fy_{dyn}} + \frac{Fz}{Fz_{dyn}} + \frac{Mx}{Mx_{dyn}} + \frac{My}{My_{dyn}} + \frac{Mz}{Mz_{dyn}} \leq 1$	
No-load torque		
Ballscrew	25x10	
(Nm)	0,60	
Geometrical moments of inertia of aluminium profile		
I_x mm^4	4,1x10^6	
I_y mm^4	4,0x10^6	
Elastic-modulus N/mm^2	70000	

Driving torque:

$$M_a = \frac{F * P * S_i}{2000 * \pi * \mu} + M_n$$

$$P_a = \frac{M_a * n}{9550}$$

F	= force	(N)
P	= thread pitch	(mm)
Si	= safety factor 1,2 … 2	
M_n	= no-load torque	(Nm)
n	= rpm of screw	(min^{-1})
M_a	= driving torque	(Nm)
μ	= screw efficiency	
P_a	= motor power	(KW)

Efficiency of lead screws:

All ballscrew 0,900

Deflection:

$$f = \frac{F * L^3}{E * I * 192}$$

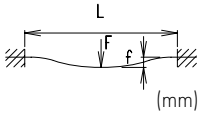

f	= deflection	(mm)
F	= load	(N)
L	= free length	(mm)
E	= elastic modulus 70000	(N/mm^2)
I	= second moment of area	(mm^4)

Linear system **GDGK 90** Ex

Dimensions (mm)

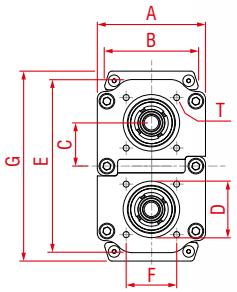

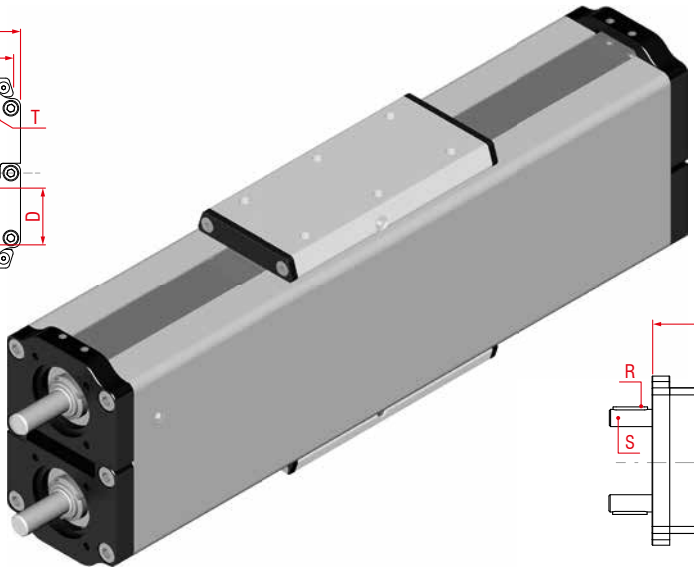

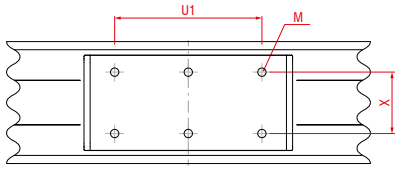

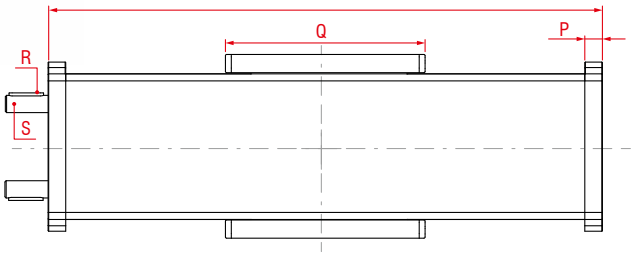

*For slide nuts refer to chapter 2.2 page 2

Increasing the carriage length will increase the basic length by the same amount.

Size	Basic length L	A	B	C	D -0,05	E	F ❐	G	M for	P1	P2	Q	Shaft R key	Shaft S Ø h6 x length	T for	U1	X	Basic weight	Weight per 100 mm
GDGKex 90	242	90	78	36	47	144	42	158	M8	15	36	170	5x5x28	14x35	M6	120	50	7,8 kg	1,5 kg

K **Spindle:**
(K) Ballscrew

1 **Selection of screw:**
(1) right hand (Standard) **(2)** left hand (by inquiry)

0 **Choice of guide body profile:**
(0) Standard **(1)** corrosion-protected screws

0 **Choice of carriages:**

(0)

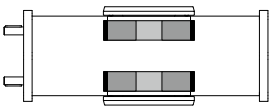

0 **Drive version:**
(0) right (locating bearing side)
(1) left (non-locating bearing side) **(2)** shaft on both sides

0 **Selection of screw:**
(0) Kg 25x10

0 **Ballscrew pitch accuracy:**
(0) 0,05 mm / 300 mm

0 **End play of ball nut:**
(0) 0,04 mm

GDG	K	EX	90	1	0	0	0	0	0	0	1500
			Pos.	1	2	3	4	5	6	7	

Basic length + stroke = total length

Sample ordering code:
GDGKex 90, ballscrew right hand, carriage version 0, drive version 0, spindle Kg 25x10, 1258 mm stroke

Safety-related limits:

• max. input speed	1500 min-1
• min. input speed	20 min-1
• nom. input torque	4 Nm
• max. starting torque	12.5 Nm
• max. static lifting power	1000 N
• max. dynamic lifting power	1500 N
• Operating modes	S1
• up to 120 full strokes per hour, evenly distributed	
• stroke length	250 mm ..1500 mm
• Velocity	0.005 ms-1 .. 0.5 ms-1
• ambient temperature range	-20 °C < Ta < 60 °C

Safety-related notes regarding lubrication:
In potentially explosive atmospheres, you may only use lubrication systems that comply with the applicable regulations and are authorised by Bahr. The maintenance intervals for the lubricators have to be observed (e. g. operating and mounting instructions for perma FLEX, if these are used).

Note that the system is not lubricated during the lubricator activation time! Before starting operation, ensure that the lubrication system is working flawlessly and check the activation documentation.

The lubrication line of the lubricator must not exceed 0.5 m in length. The lubricator and the lubrication line are pressurized. When performing maintenance work ensure that no air bubbles can form within the lubrication system, that the lubrication lines are not kinked and that the lubricator is not exposed to mechanical loads.

Preset dispensing time	Activation time
1 month	1 day
3 months	5 days
6 months	14 days
12 months	28 days

Linear system **EGT/EGK 30, 40, 60, 80**

1.1

SPINDLE DRIVEN

- SLIDE UNIT
- PRECISION
- ROBUST

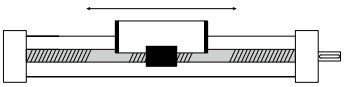

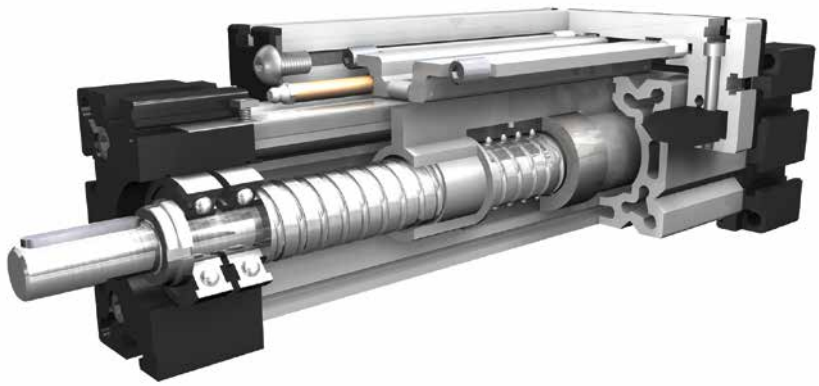

Function:
This unit consists of an aluminium square profile with lateral V-guides. The carriage, which is driven by means of a trapezoidal/ballscrew threaded spindle with lead screw, moves along the unit guided by V-slides that are adjustable free of play. Where two linear units are used in parallel or where two carriages are mounted on one unit, the leading-nut receiver can be used to adjust the symmetry of the carriages. The linear opening of the unit is sealed with a stainless steel cover band to make the unit splash-proof and dust-tight.

Fitting position: As required. Max. length 3.000 mm (**EG 30** / max. 1500 mm, **EG 40** / max. 2000 mm)
Carriage mounting: T-slots, tapped holes (size 40)
Unit mounting: By T-slots or tapped holes in the bearing block, mounting sets.

Forces and torques

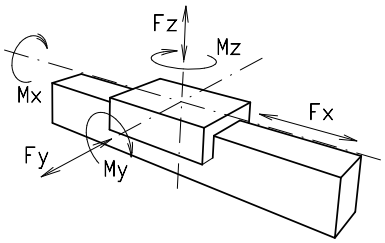

Size	EG 30		EG 40		EG 60		EG 80	
Forces / Torques	static	dynamic	static	dynamic	static	dynamic	static	dynamic
F_x (N)	750	600	1500	1200	2500	2000	4200	3500
F_y (N)	90	60	350	315	500	450	1000	900
F_z (N)	90	60	500	450	750	675	1125	1000
M_x (Nm)	10	5	20	18	33	30	82	75
M_y (Nm)	13	6	44	40	77	70	220	200
M_z (Nm)	14	7	33	30	55	50	165	150

All forces and torques relate to the following:

existing values / table values: $\frac{Fy}{Fy_{dyn}} + \frac{Fz}{Fz_{dyn}} + \frac{Mx}{Mx_{dyn}} + \frac{My}{My_{dyn}} + \frac{Mz}{Mz_{dyn}} \leq 1$

No-load torque								
Trapezoidal thread	10x3	-	18x4	18x8	24x5	24x10	28x5	28x10
(Nm)	0,4	-	0,70	0,70	0,50	0,80	0,80	1,0
Ballscrew	8x2,5	-	16x5	16x10	25x5	25x10	32x5	32x10
(Nm)	0,25	-	0,40	0,60	0,40	0,70	0,80	1,0

Geometrical moments of inertia of aluminium profile				
I_x mm^4	4,09x10^4	1,35x10^5	5,65x10^5	19,14x10^5
I_y mm^4	4,00x10^4	1,48x10^5	6,12x10^5	20,12x10^5
Elastic-modulus N/mm^2	70000	70000	70000	70000

Driving torque:

$$M_a = \frac{F*P*S_i*w}{2000*\pi*\mu} + M_n$$

$$P_a = \frac{M_a*n}{9550}$$

F	= force	(N)
P	= thread pitch	(mm)
Si	= safety factor 1,2 … 2	
M_n	= no-load torque	(Nm)
n	= rpm of screw	(min^{-1})
M_a	= driving torque	(Nm)
μ	= screw efficiency	
w	= friction coefficient	~1,22
P_a	= motor power	(KW)

Efficiency of lead screws:

All ballscrew		0,900
Tr	10x3	0,375
Tr	18x4	0,399
Tr	18x8	0,565
Tr	24x5	0,384
Tr	24x10	0,550
Tr	28x5	0,349
Tr	28x10	0,513

Deflection:

$$f = \frac{F*L^3}{E*I*192}$$

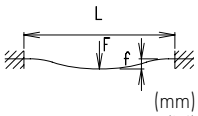

f = deflection	(mm)
F = load	(N)
L = free length	(mm)
E = elastic modulus 70000	(N/mm^2)
I = second moment of area	(mm^4)

For the diagram for critical speeds of lead screws refer to chapter 4.2

Linear system **EGT/EGK 30, 40, 60, 80**

Dimensions (mm)

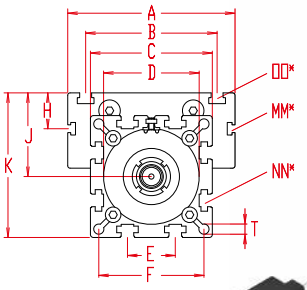

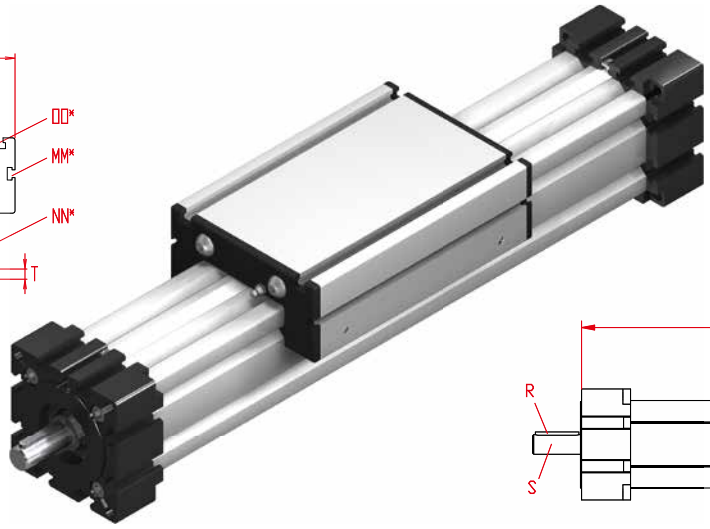

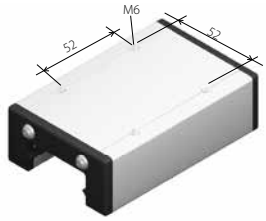

Size 40 without T-slots

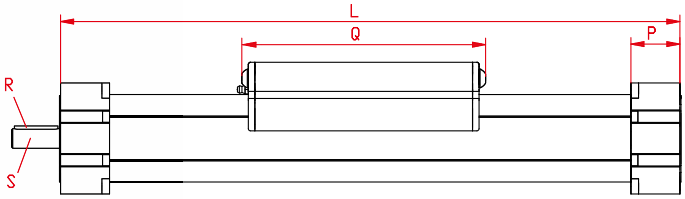

*For slide nuts refer to chapter 2.2 page 2

Increasing the carriage length will increase the basic length by the same amount.

Size ❒	Basic length L	A	B	C	D ± 0,05	E	F	H	J	K	MM for	NN for	OO for	P	Q	R	S Ø h6 x length	T	Basic weight	Weight per 100 mm
EG 30	120	70	56	42	40x1	13	35	-	26	47	-	M 6	M 6	18	82	-	5x15	4,2	0,6 kg	0,16 kg
EG 40	170	70	-	58	48x1	18	47	-	35	64	-	M 6	M 6	25	117	3x3x25	10x27	6,5	1,3 kg	0,36 kg
EG 60	235	100	80	82	62x1	30	69	-	49	90	-	M 8	M 8	35	165	5x5x28	14x35	8,5	4,0 kg	0,67 kg
EG 80	286	140	110	102	80x1	40	88	30	70	121	M 6	M 10	M 10	45	193	6x6x40	18x45	8,5	6,7 kg	1,14 kg

T **Spindle:**
(T) Trapezoidal thread **(K)** Ballscrew

1 **Selection of screw:**
(1) right hand **(2)** left hand (Ballscrew by inquiry)

0 **Choice of guide body profile:**
(0) Standard **(2)** corrosion-protected guide rods (only size 30) and screws

0 **Choice of carriages:**

(0)

(1)

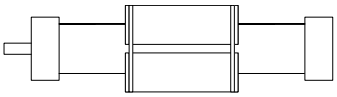

Size	Version 1	
	Q	L
30	94	132
40	133	186
60	181	251
80	209	302

0 **Drive version:**
(0) one shaft (locating bearing side) **(1)** one shaft (non-locating bearing side) **(2)** shaft on both sides

0 **Selection of screw:**

Tr = trapezoidal thread / Kg = ballscrew

Size	Standard	Multistart screw	Standard	Multistart screw		
30	**(0)** Tr 10x3		**(0)** Kg 8x2,5			
40	**(0)** Tr 18x4	**(1)** Tr 18x8	**(0)** Kg 16x5	**(1)** Kg 16x10	**(2)** Kg 16x16	
60	**(0)** Tr 24x5	**(1)** Tr 24x10	**(0)** Kg 25x5	**(1)** Kg 20x20	**(2)** Kg 25x10	**(3)** Kg 20x50
80	**(0)** Tr 28x5	**(1)** Tr 28x10	**(0)** Kg 32x5	**(1)** Kg 25x25	**(2)** Kg 32x10	

0 **Ballscrew pitch accuracy:**
(0) 0,05 mm / 300 mm (Standard) **(2)** 0,025 mm / 300 mm

0 **End play of ball nut:**
(0) 0,04 mm (Standard), **(1)** < 0,02 mm, **(2)** 2% apply prestress

Repeatability:
± 0,2 mm Trapezoidal
± 0,025 mm Ballscrew

EG	T	40	1	0	0	0	0	0	0	1500
	Pos.		1	2	3	4	5	6	7	

Basic length + stroke = total length

For combination kits and connecting elements refer to chapter 2.2

Sample ordering code:
EGT40, trapezoidal right hand thread, standard body profile, top carriage, one shaft (locating bearing side), spindle 18x4, 1331 mm stroke

Linear system **EGT/EGK 30, 40, 60, 80**

1.1

SPINDLE DRIVEN RIGHT-HAND AND LEFT-HAND

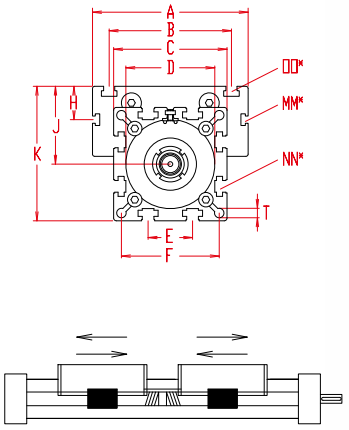

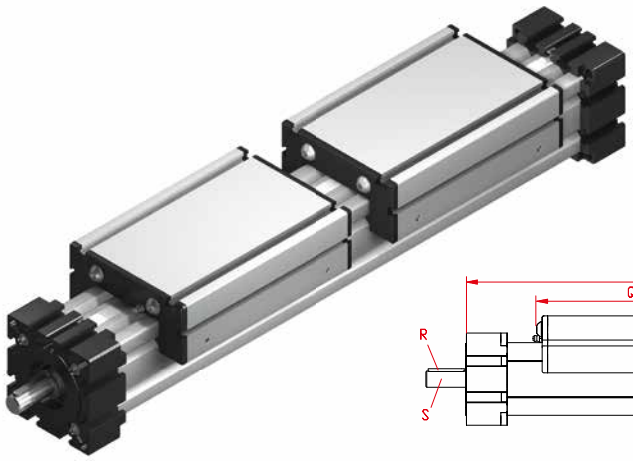

Size 40 without T-slots

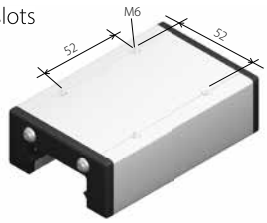

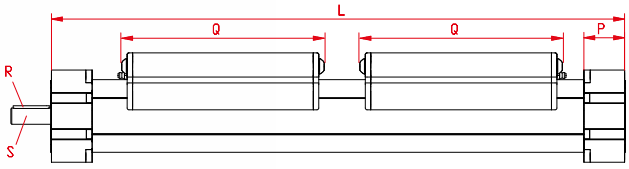

*For slide nuts refer to chapter 2.2 page 2

Increasing the carriage length will increase the basic length by the same amount.

Size ❒	Basic length L	A	B	C	D ± 0,05	E	F	H	J	K	MM for	NN for	OO for	P	Q	R	S Ø h6 x length	T	Basic weight	Weight per 100 mm
EG 30	202	70	56	42	40x1	13	35	-	26	47	-	M 6	M 6	18	82	-	5x15	4,2	1,0 kg	0,16 kg
EG 40	287	70	-	58	48x1	18	47	-	35	64	-	M 6	M 6	25	117	3x3x25	10x27	6,5	2,5 kg	0,36 kg
EG 60	400	100	80	82	62x1	30	69	-	49	90	-	M 8	M 8	35	165	5x5x28	14x35	8,5	6,2 kg	0,67 kg
EG 80	479	140	110	102	80x1	40	88	30	70	121	M6	M 10	M 10	45	193	6x6x40	18x46	8,5	12,0 kg	1,14 kg

T **Spindle:**
(T) Trapezoidal thread **(K)** Ballscrew

3 **Selection of screw:**
(3) right - left hand **(4)** divided spindle

0 **Choice of guide body profile:**
(0) Standard **(2)** corrosion-protected guide rods (only size 30) and screws

0 **Choice of carriages:**

(0)

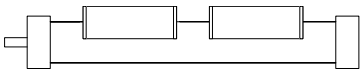

(1)

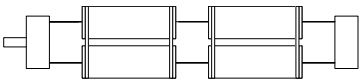

Size	Version 1	
	Q	L
30	94	226
40	133	319
60	181	432
80	209	511

0 **Drive version:**
(0) shaft right hand thread **(1)** shaft left hand thread **(2)** shaft on both sides

0

Selection of screw:

Size	Standard	Multistart screw	Standard	Multistart screw	
30	**(0)** Tr 10x3		**(0)** Kg 8x2,5*	Tr = trapezoidal thread / Kg = ballscrew	
40	**(0)** Tr 18x4	**(1)** Tr 18x8	**(0)** Kg 16x5	**(1)** Kg 16x10*	**(1)** Kg 16x16*
60	**(0)** Tr 24x5	**(1)** Tr 24x10	**(0)** Kg 25x5	**(1)** Kg 20x20*	**(2)** Kg 25x10*
80	**(0)** Tr 28x5	**(1)** Tr 28x10	**(0)** Kg 32x5	**(1)** Kg 25x25*	**(2)** Kg 32x10*

* = only for selection of divided spindle

0 **Ballscrew pitch accuracy:**
(0) 0,05 mm / 300 mm (Standard) **(2)** 0,025 mm / 300 mm

0 **End play of ball nut:**
(0) 0,04 mm (Standard), **(1)** < 0,02 mm, **(2)** 2% apply prestress

Repeatability:
± 0,2 mm Trapezoidal
± 0,025 mm Ballscrew

EG	T	40	3	0	0	0	0	0	0	2200
	Pos.		1	2	3	4	5	6	7	

Basic length + stroke = total length

For combination kits and connecting elements refer to chapter 2.2

Sample ordering code:
EGT40, trapezoidal right - left hand thread, standard body profile, 2 top carriage, one shaft on right hand side, spindle 18x4, 1914 mm stroke

EGT 30

ELT 60S

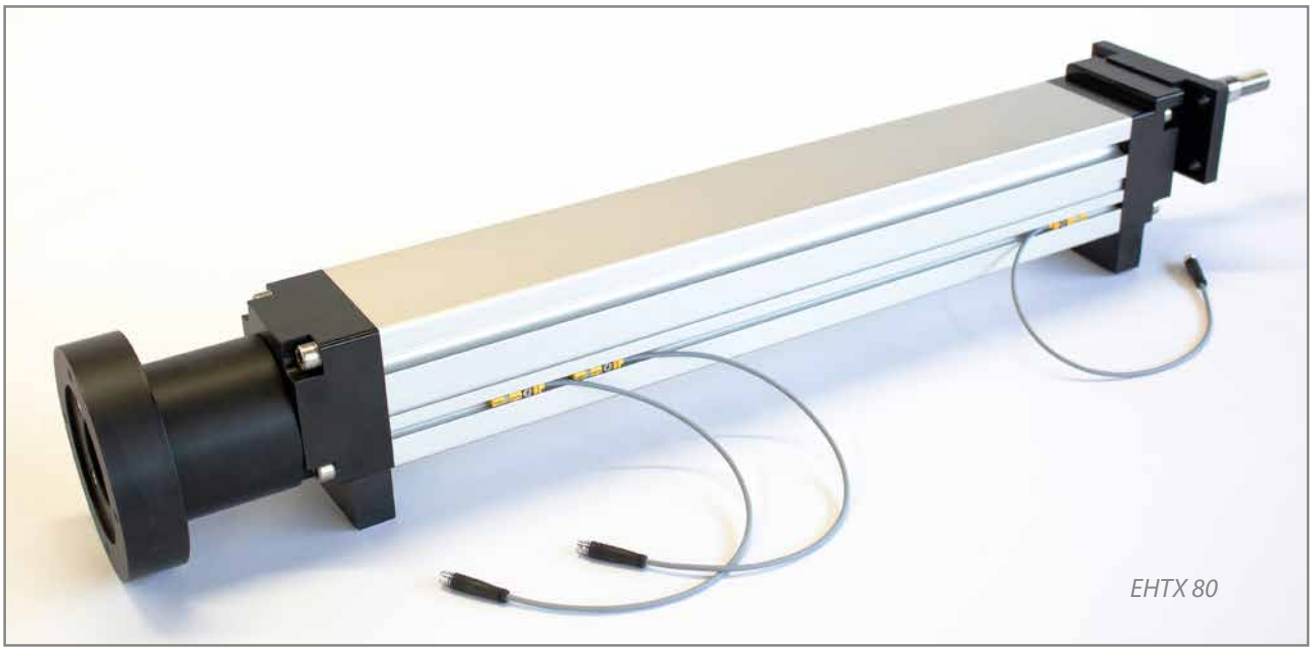

EHTX 80

EHT 60 | EHT 80

Linear system **EGTH/EGKH 40, 60, 80**

1.1

SPINDLE DRIVEN

- SLIDE UNIT
- PRECISION
- TELESCOPIC SYSTEM

Function:
The rotary movement of the spindle is translated into a linear motion. Carriage and square tube are connected by a clamping block. The result is a telescopic movement.

Fitting position: As required. Max. length 3.000 mm
Carriage mounting: By T-slots and tapped holes
Unit mounting: By T-slots and tapped holes in the mounting surface.

Forces and torques

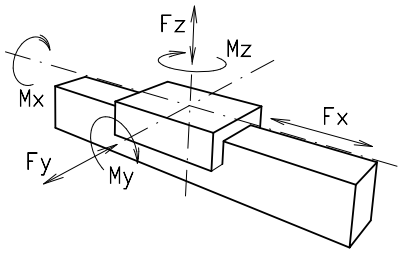

Size	EG(T/K)H 40		EG(T/K)H 60		EG(T/K)H 80	
Forces / Torques	static	dynamic	static	dynamic	static	dynamic
F_x (N)	1500	1200	2500	2000	4200	3500
F_y (N)	350	315	500	450	1000	900
F_z (N)	500	450	750	675	1125	1000
M_x (Nm)	20	18	33	30	82	75
M_y (Nm)	44	40	77	70	220	200
M_z (Nm)	33	30	55	50	165	150

All forces and torques relate to the following:

existing values / table values: $\frac{Fy}{Fy_{dyn}} + \frac{Fz}{Fz_{dyn}} + \frac{Mx}{Mx_{dyn}} + \frac{My}{My_{dyn}} + \frac{Mz}{Mz_{dyn}} \leq 1$

No-load torque						
Trapezoidal thread	18x4	18x8	24x5	24x10	28x5	28x10
(Nm)	0,70	0,70	0,50	0,80	0,80	1,0

Geometrical moments of inertia of aluminium profile			
I_x mm^4	$1{,}35 \times 10^5$	$5{,}65 \times 10^5$	$19{,}14 \times 10^5$
I_y mm^4	$1{,}48 \times 10^5$	$6{,}12 \times 10^5$	$20{,}12 \times 10^5$
E-modulus N/mm^2	70000	70000	70000

Driving torque:

$$M_a = \frac{F * P * S_i * w}{2000 * \pi * \mu} + M_n$$

$$P_a = \frac{M_a * n}{9550}$$

F	= force	(N)
P	= thread pitch	(mm)
Si	= safety factor 1,2 … 2	
M_n	= no-load torque	(Nm)
n	= rpm of screw	(min^{-1})
M_a	= driving torque	(Nm)
μ	= screw efficiency	
w	= friction coefficient	~1,22
P_a	= motor power	(KW)

Efficiency of lead screws:

All ballscrew		0,900
Tr	10x3	0,375
Tr	18x4	0,399
Tr	18x8	0,565
Tr	24x5	0,384
Tr	24x10	0,550
Tr	28x5	0,349
Tr	28x10	0,513

Deflection:

$$f = \frac{F * L^3}{E * I * 192}$$

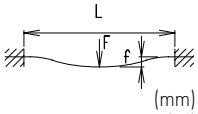

f	= deflection	(mm)
F	= load	(N)
L	= free length	(mm)
E	= elastic modulus 70000	(N/mm^2)
I	= second moment of area	(mm^4)

For the diagram for critical speeds of lead screws refer to chapter 4.2

Linear system **EGTH/EGKH 40, 60, 80**

Dimensions (mm)

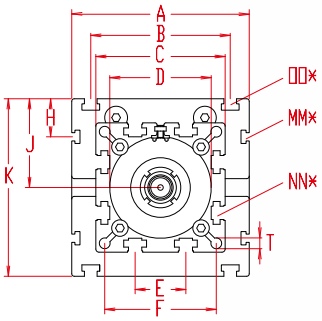

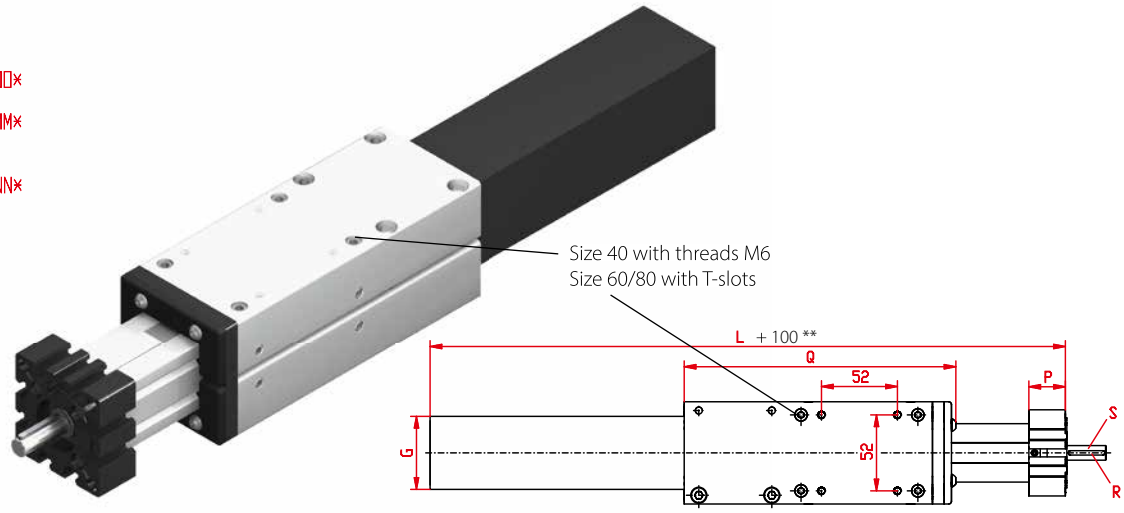

*For slide nuts refer to chapter 2.2 page 2

** The basic length (minimum length) of the unit (L+100) includes a stroke of 100mm

Size ❒	Basic length L +**	A	B	C	D ± 0,05	E	F	G	H	J	K	MM for	NN for	OO for	P	Q	R	S Ø h6 x length	T	Basic weight	Weight per 100 mm
EG H40	255	70	-	58	48x1	18	47	50	-	35	70	-	M 6	-	25	190	3x3x25	10x27	6,5	3,0 kg	0,44 kg
EG H60	345	100	80	82	62x1	30	69	70	-	49	98	-	M 8	M 8	35	250	5x5x28	14x35	8,5	7,0 kg	0,71 kg
EG H80	390	140	110	102	80x1	40	88	90	30	70	140	M 6	M 10	M 10	45	300	6x6x40	18x45	8,5	12,8 kg	1,35 kg

T **Spindle:**
(T) Trapezoidal thread **(K)** Ballscrew

1 **Selection of screw:**
(1) right hand **(2)** left hand

0 **Choice of guide body profile:**
(0) Standard **(1)** stainless screws

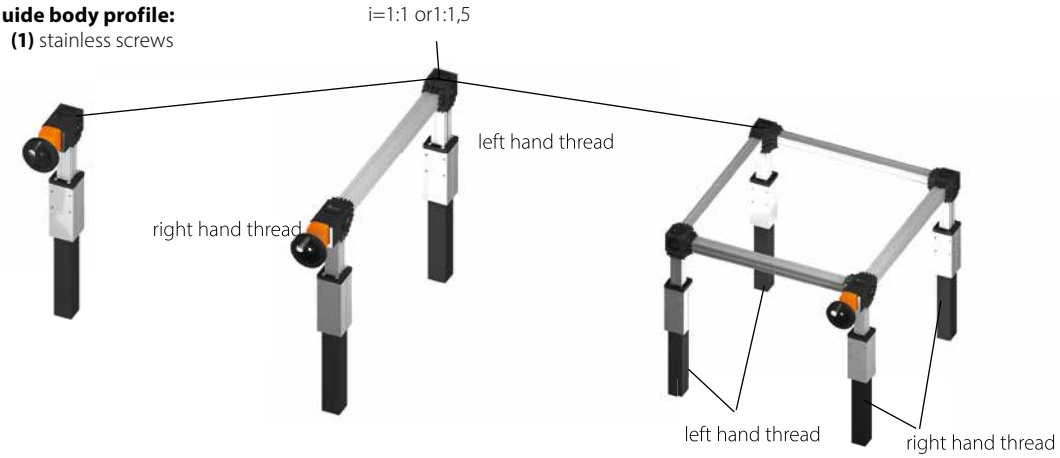

0

Selection of screw: Tr = trapezoidal thread / Kg = ballscrew

Size	Standard	Multistart screw	Standard
40	**(0)** Tr 18x4	**(1)** Tr 18x8	**(0)** Kg 16x5
60	**(0)** Tr 24x5	**(1)** Tr 24x10	**(0)** Kg 25x5
80	**(0)** Tr 28x5	**(1)** Tr 28x10	**(0)** Kg 32x5

0 **Ballscrew pitch accuracy:**
(0) 0,05 mm / 300 mm (Standard) **(2)** 0,025 mm / 300 mm

0 **End play of ball nut:**
(0) 0,04 mm (Standard), **(1)** < 0,02 mm, **(2)** 2% apply prestress

Repeatability:
± 0,2 mm Trapezoidal
± 0,025 mm Ballscrew

EG	T	H	40	1	0	0	0	0	0	0	755
			Pos.	1	2	3	4	5	6	7	

Basic length + stroke = total length

For combination kits and connecting elements refer to chapter 2.2

Sample ordering code:
EGTH40, trapezoidal right hand thread, standard body profile, 500 mm stroke

Linear system **EHT/EHK 60, 80**

1.1

SPINDLE DRIVEN

LIFTING SYSTEM

PRECISION

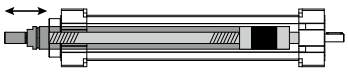

Function:
The rotary motion of the threaded spindle is converted into a linear motion of the pressure tube.
Due to the piston rod principle, high axial forces can be realised, e. g. for shelf and dosing applications.

Mounting position: Variable, max. length 1500 mm
Fixation: By C- and T-nuts or mounting sets

Forces and torques

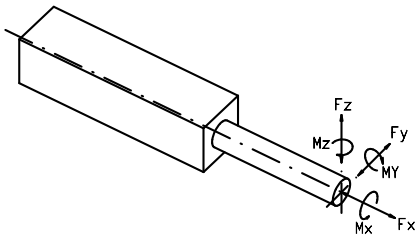

Size	EH 60		EH 80	
Forces / Torques	static	dynam	static	dynam
F_x (N)	1800	1200	3000	2500
F_y (N)	130	80	210	140
F_z (N)	130	80	210	140
M_x (Nm)	20	11	27	16
M_y (Nm)	95	60	190	110
M_z (Nm)	95	60	190	110

All forces and torques relate to the following:

existing values / table values: $\frac{Fy}{Fy_{dyn}} + \frac{Fz}{Fz_{dyn}} + \frac{Mx}{Mx_{dyn}} + \frac{My}{My_{dyn}} + \frac{Mz}{Mz_{dyn}} \leq 1$

No-load torque				
Trapezoidal thread	18x4	18x8	24x5	24x10
(Nm)	0,40	0,50	0,60	0,80
Ballscrew	16x5	16x10	25x5	25x10
(Nm)	0,20	0,40	0,40	0,60
Geometrical moments of inertia of aluminium profile				
I_x mm^4	4,75x10^5		15,41x10^5	
I_y mm^4	4,88x10^5		16,02x10^5	
Elastic-modulus N/mm^2	70000		70000	

Driving torque:

$$M_a = \frac{F*P*S_i}{2000*\pi*\mu} + M_n$$

$$P_a = \frac{M_a*n}{9550}$$

F = force (N)
P = thread pitch (mm)
Si = safety factor 1,2 … 2
M_n = no-load torque (Nm)
n = rpm of screw (min^{-1})
M_a = driving torque (Nm)
μ = screw efficiency
P_a = motor power (KW)

Efficiency of lead screws:

All ballscrew 0,900

Tr 18x4 0,399
Tr 18x8 0,565
Tr 24x5 0,384
Tr 24x10 0,550

Deflection:

$$f = \frac{F*L^3}{E*I*192}$$

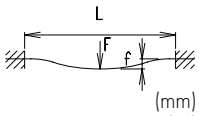

f = deflection (mm)
F = load (N)
L = free length (mm)
E = elastic modulus 70000 (N/mm^2)
I = second moment of area (mm^4)

For the diagram for critical speeds of lead screws refer to chapter 4.2

Linear system **EHT/EHK 60, 80**

Dimensions (mm)

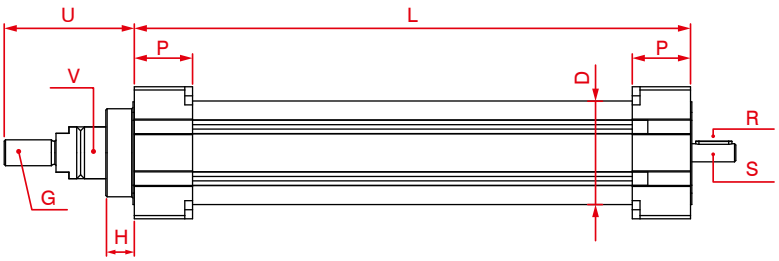

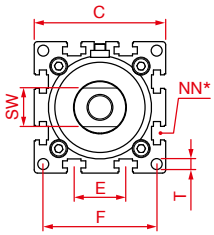

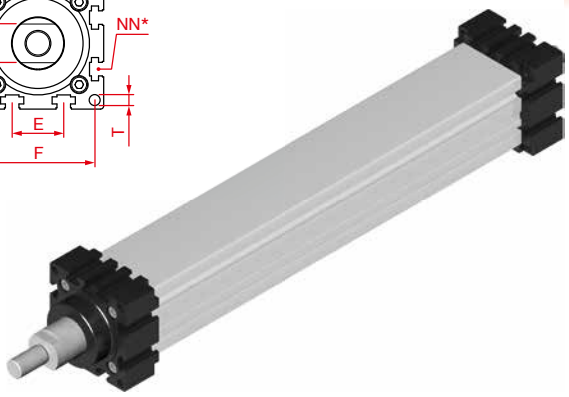

*For slide nuts refer to chapter 2.2 page 2

Size ❒	Pressure pipe Spindle	Basic length L	B	C	D ± 0,05 Ø x length	E	F	G Ø x length	H	NN für	P	R	S Ø x length	SW	T	U	V Ø	Basic weight	Weight per 100 mm
EH 60	**Ø 30 KG 16x5**	165	60	82	62x1	30	69	M16x1,5x32	20	M8	35	3x3x25	10x27	24	8,5	77	30	2,42 kg	0,96 kg
EH 60	**Ø 30 KG 16x10-16**	175	60	82	62x1	30	69	M16x1,5x32	20	M8	35	3x3x25	10x27	24	8,5	77	30	2,42 kg	0,96 kg
EH 60	**Ø 30 Tr 18x4-8**	165	60	82	62x1	30	69	M16x1,5x32	20	M8	35	3x3x25	10x27	24	8,5	77	30	2,37 kg	0,84 kg
EH 80	**Ø 40 KG 25x5**	183	80	102	80x1	40	88	M20x1,5x40	22	M10	45	5x5x28	14x35	30	8,5	100	40	5,07 kg	1,50 kg
EH 80	**Ø 40 KG 25x10**	202	80	102	80x1	40	88	M20x1,5x40	22	M10	45	5x5x28	14x35	30	8,5	100	40	5,07 kg	1,50 kg
EH 80	**Ø 40 KG 25x25**	233	80	102	80x1	40	88	M20x1,5x40	22	M10	45	5x5x28	14x35	30	8,5	100	40	5,07 kg	1,50 kg
EH 80	**Ø 40 Tr 24x5-10**	183	80	102	80x1	40	88	M20x1,5x40	22	M10	45	5x5x28	14x35	30	8,5	100	40	5,01 kg	1,26 kg

K **Spindle:**
(T) Trapezoidal thread **(K)** Ballscrew

1 **Selection of screw:**
(1) right hand **(2)** left hand

0 **Choice of guide body profile:**
(0) Standard **(2)** corrosion-protected screws **(4)** expanded corrosion-protected version, only for trapezoidal thread (on request)

0

Selection of screw:		Tr = trapezoidal thread		Kg = ballscrew	
Size	**Standard**	**Multistart screw**	**Standard**	**Multistart screw**	
60	**(0)** Tr 18x4	**(1)** Tr 18x8	**(0)** Kg 16x5	**(1)** Kg 16x10	**(2)** Kg 16x16
80	**(0)** Tr 24x5	**(1)** Tr 24x10	**(0)** Kg 25x5	**(1)** Kg 25x10	**(2)** Kg 25x25

Repeatability: ± 0,2 mm Trapezoidal ± 0,025 mm Ballscrew

0 **Ballscrew pitch accuracy:** (only ballscrew)
(0) 0,05 mm / 300 mm **(2)** 0,025 mm / 300 mm

0 **End play of ball nut:** (only ballscrew)
(0) 0,04 mm (Standard), **(1)*** < 0,02 mm, **(2)*** 2% apply prestress

EH	K	80	1	0	0	0	0	0	0	1000
		Pos.	1	2	3	4	5	6	7	

Basic length + stroke = total length

For combination kits and connecting elements refer to chapter 2.2

Sample ordering code:
EHK80, ballscrew right hand thread, standard body profile, spindle Kg 25x5, 817 mm stroke

Linear system **EHTX/EHKX 60, 80**

1.1

SPINDLE DRIVEN

LIFTING SYSTEM

PRECISION

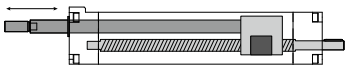

Function:
The rotary motion of the threaded spindle is converted into a linear motion of the pressure tube. Due to the piston rod principle, high axial forces can be realised, e. g. for shelf and dosing applications. Spindle and piston rod are aligned parallel.

Mounting position: Variable, max. length 1500 mm
Fixation: By T-nuts, mounting sets or and tapped holes in the bearing block.

Forces and torques

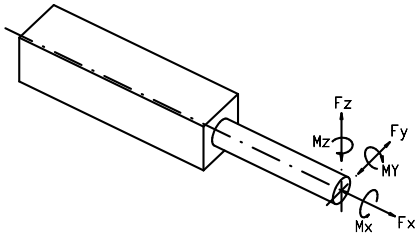

Size	EH 60		EH 80	
Forces / Torques	statisch	dynamisch	statisch	dynamisch
F_x (N)	1800	1200	3000	2500
F_y (N)	130	80	210	140
F_z (N)	130	80	210	140
M_x (Nm)	20	11	27	16
M_y (Nm)	95	60	190	110
M_z (Nm)	95	60	190	110

All forces and torques relate to the following:

existing values / table values: $\frac{Fy}{Fy_{dyn}} + \frac{Fz}{Fz_{dyn}} + \frac{Mx}{Mx_{dyn}} + \frac{My}{My_{dyn}} + \frac{Mz}{Mz_{dyn}} \leq 1$

No-load torque				
Trapezoidal thread	18x4	18x8	24x5	24x10
(Nm)	0,40	0,50	0,60	0,80
Ballscrew	16x5	16x10	25x5	25x10
(Nm)	0,20	0,40	0,40	0,60

Geometrical moments of inertia of aluminium profile		
I_x mm^4	4,76x10^5	15,41x10^5
I_y mm^4	4,88x10^5	16,02x10^5
Elastic-modulus N/mm^2	70000	70000

Driving torque:

$$M_a = \frac{F*P*S_i}{2000*\pi*\mu} + M_n$$

$$P_a = \frac{M_a*n}{9550}$$

F = force (N)
P = thread pitch (mm)
Si = safety factor 1,2 … 2
M_n = no-load torque (Nm)
n = rpm of screw (min^{-1})
M_a = driving torque (Nm)
μ = screw efficiency
P_a = motor power (KW)

Efficiency of lead screws:

All ballscrew 0,900

Tr 24x5 0,384
Tr 24x10 0,550

Deflection:

$$f = \frac{F*L^3}{E*I*192}$$

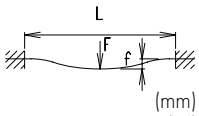

f = deflection (mm)
F = load (N)
L = free length (mm)
E = elastic modulus 70000 (N/mm^2)
I = second moment of area (mm^4)

For the diagram for critical speeds of lead screws refer to chapter 4.2

Linear system **EHTX/EHKX 60, 80**

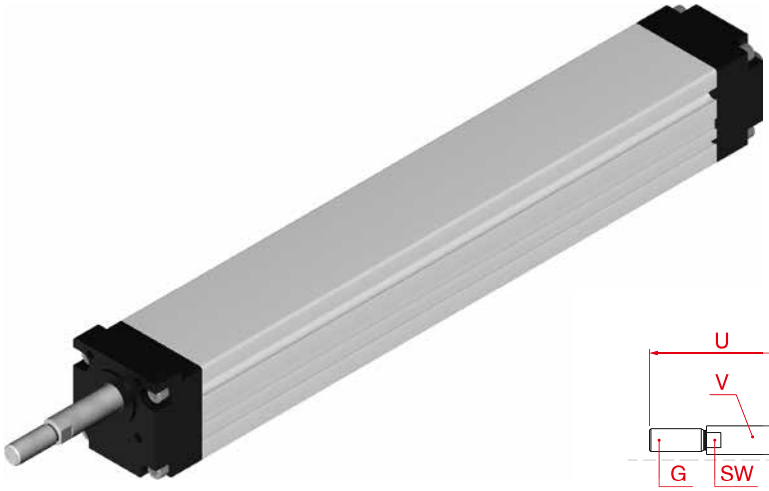

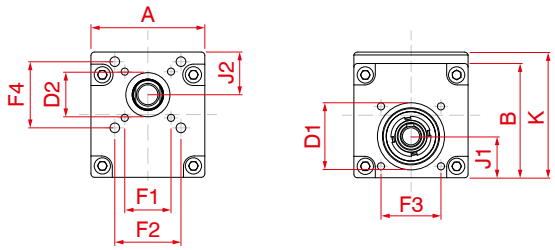

*For slide nuts refer to chapter 2.2 page 2

Size	Basic length L	A	B	D1	D2	F1 ■	F2 ■	F3 ■	G Ø x length	J1	J2	K	P	R	S Ø x length	SW	U	V Ø	Basic weight	Weight per 100 mm
EH 60	165	60	60	37	42		49	32		22	27	70	35	3x3x25	10x27	17	77	20	1,78 kg	0,66 kg
EH 80	183	80	80	47	31	32,5	46,5	42	M16x1,5x40	29	30	88	45	5x5x28	14x35	17	100	20	3,71 kg	1,3 kg
EH 80	183	80	80	47	31	32,5	46,5	42	M16x1,5x40	29	30	88	45	5x5x28	14x35	17	100	30	3,71 kg	1,3 kg

K **Spindle:**
(T) Trapezoidal thread **(K)** Ballscrew

1 **Selection of screw:**
(1) right hand **(2)** left hand

0 **Choice of guide body profile:**
(0) Standard **(2)** corrosion-protected screws **(4)** expanded corrosion-protected version, only for trapezoidal thread (on request)

0

Selection of screw:		Tr = trapezoidal thread		Kg = ballscrew
Size	**Standard**	**Multistart screw**	**Standard**	**Multistart screw**
60	**(0)** Tr 18x4	**(1)** Tr 18x8		
80	**(0)** Tr 24x5	**(1)** Tr 24x10	**(0)** Kg 25x5	**(1)** Kg 25x10

Repeatability: ± 0,2 mm Trapezoidal ± 0,025 mm Ballscrew

0 **Ballscrew pitch accuracy:** *(only ballscrew)*
(0) 0,05 mm / 300 mm **(2)** 0,025 mm / 300 mm

0 **End play of ball nut:** (only ballscrew)
(0) 0,04 mm (Standard), **(1)*** < 0,02 mm, **(2)*** 2% apply prestress

EH	K	X	80	1	0	0	0	0	0	0	1000
			Pos.	1	2	3	4	5	6	7	

Basic length + stroke = total length

For combination kits and connecting elements refer to chapter 2.2

Sample ordering code:
EHKX80, ballscrew right hand thread, standard body profile, spindle Kg 25x5, 817 mm stroke

Linear system **EHTX 80**

1.1

SPINDLE DRIVEN

EX-GUIDE
LIFTING SYSTEM
PRECISION

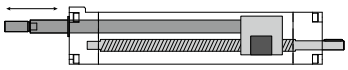

Richtlinie | Guideline
2014/34/EU (ATEX)
II 2G Ex h IIB T4 Gb
-20 °C ≤ Ta ≤ 60 °C

Function:
The rotary motion of the threaded spindle is converted into a linear motion of the pressure tube. Due to the piston rod principle, high axial forces can be realised, e. g. for shelf and dosing applications. Spindle and piston rod are aligned parallel.

The products can be used as follows, according to the marking:
a) In Zone 2 (Gas, Category 3G, EPL Gc) in explosion groups IIA and IIB
b) In Zone 1 (Gas, Category 2G, EPL Gb) in explosion groups IIA and IIB
The qualification with regard to the surface temperature is T4; for all gases, vapours and mists with an ignition temperature > 125 °C the product is not an ignition source.

Mounting position: Variable, max. length 1.500 mm
Fixation: By T-nuts, mounting sets or and tapped holes in the bearing block.

Forces and torques

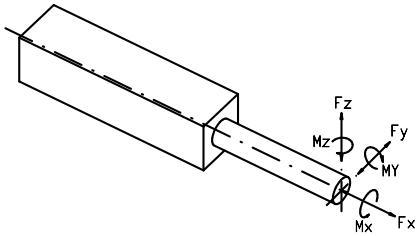

Size	EH 80	
Forces / Torques	statisch	dynamisch
F_x (N)	3000	2500
F_y (N)	210	140
F_z (N)	210	140
M_x (Nm)	27	16
M_y (Nm)	190	110
M_z (Nm)	190	110
All forces and torques relate to the following:		
existing values / table values	$\frac{Fy}{Fy_{dyn}} + \frac{Fz}{Fz_{dyn}} + \frac{Mx}{Mx_{dyn}} + \frac{My}{My_{dyn}} + \frac{Mz}{Mz_{dyn}} \leq 1$	
No-load torque		
Trapezoidal thread	24x5	24x10
(Nm)	0,60	0,80
Geometrical moments of inertia of aluminium profile		
I_x mm^4	15,41x10^5	
I_y mm^4	16,02x10^5	
Elastic-modulus N/mm^2	70000	

Driving torque:

$$M_a = \frac{F*P*S_i}{2000*\pi*\mu} + M_n$$

$$P_a = \frac{M_a*n}{9550}$$

F	= force	(N)
P	= thread pitch	(mm)
Si	= safety factor 1,2 … 2	
M_n	= no-load torque	(Nm)
n	= rpm of screw	(min^{-1})
M_a	= driving torque	(Nm)
μ	= screw efficiency	
P_a	= motor power	(KW)

Efficiency of lead screws:

Tr	18x4	0,399
Tr	18x8	0,565
Tr	24x5	0,384
Tr	24x10	0,550

Deflection:

$$f = \frac{F*L^3}{E*I*192}$$

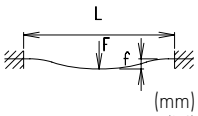

f = deflection	(mm)
F = load	(N)
L = free length	(mm)
E = elastic modulus 70000	(N/mm^2)
I = second moment of area	(mm^4)

For the diagram for critical speeds of lead screws refer to chapter 4.2

Linear system **EHTX 80**

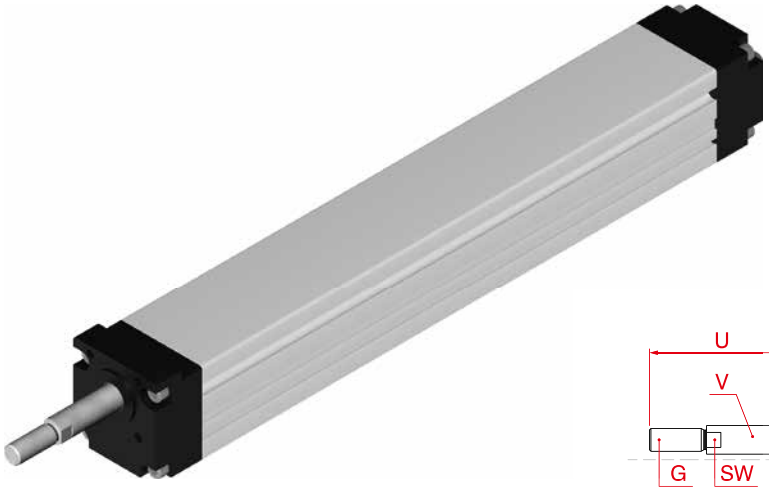

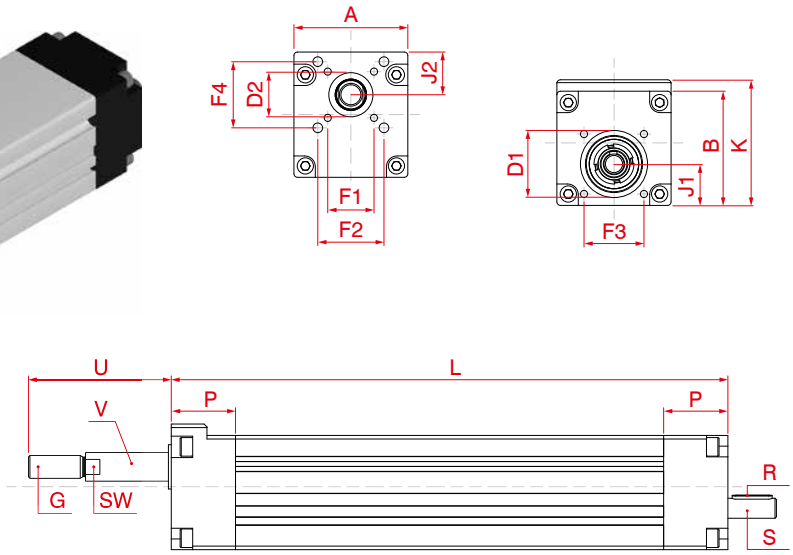

*For slide nuts refer to chapter 2.2 page 2

Size	Basic length L	A	B	D1	D2	F1 ■	F2 ■	F3 ■	G Ø x length	J1	J2	K	P	R	S Ø x length	SW	U	V Ø	Basic weight	Weight per 100 mm
EH 80	183	80	80	47	31	32,5	46,5	42	M16x1,5x40	29	30	88	45	5x5x28	14x35	17	100	30	3,71 kg	1,3 kg

T **Spindle:**
(T) Trapezoidal thread

1 **Selection of screw:**
(1) right hand **(2)** left hand

0 **Choice of guide body profile:**
(0) Standard **(2)** corrosion-protected screws **(4)** expanded corrosion-protected version (on request)

0

Selection of screw:		Tr = trapezoidal thread
Size	**Standard**	**Multistart screw**
80	**(0)** Tr 24x5	**(1)** Tr 24x10

Repeatability: ± 0,2 mm Trapezoidal

EH	T	X	80	1	0	0	0	0	0	0	1000
			Pos.	1	2	3	4	5	6	7	

Basic length + stroke = total length

For combination kits and connecting elements refer to chapter 2.2

Sample ordering code:
EHTXex80, ballscrew right hand thread, standard body profile, spindle Tr 24x5, 817 mm stroke

Linear system **ELT/ELK 30, 40, 60, 60S, 80, 80S, 100, 125**

1.1

SPINDLE DRIVEN

LIFTING SYSTEM

PRECISION

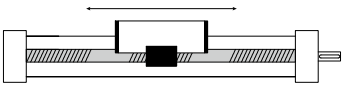

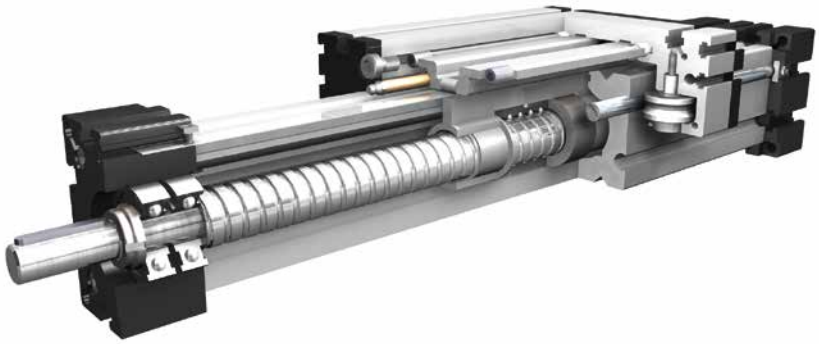

Function:
This linear unit consists of an aluminium hollow section with integral, parallel ground and hardened steel guide rods. The carriage has play-adjustable ball-bearing rollers which engage with the guide rods. The rotating trapezoidal/ballscrew causes linear motion of the ballnut, which is connected to the carriage. The slot necessary for this is covered by a stainless steel strip, making the unit dust- and splash-proof. Lateral adjustment of movement for parallel units, or when two carriages are mounted on one unit, is provided by the ballnut mounting.

Fitting position: As required, max. length 3.000 mm (**EL 30** / max. 1500 mm, **EL 40** / max. 2000 mm)
Carriage mounting: By T-slots and tapped holes
Unit mounting: By T-slots and tapped holes in the mounting surfaces.

Forces and torques

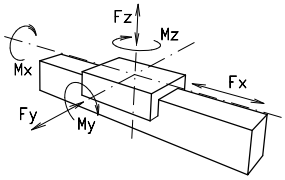

Size	EL 30		EL 40		EL 60		EL 60 S		EL 80		EL 80S		EL 100		EL 125	
Forces/Torques	static	dyna.	static	dyna.	static	dyna.	static	dyna.	static	dyna.	static	dyna.	static	dyna.	static	dyna.
F_x (N)	750	600	1500	1200	2500	2000	2500	2000	5000	4000	5000	4000	10000	8000	15000	12000
F_y (N)	90	60	1200	700	3000	2000	4100	3100	3000	2000	4600	3600	8000	6500	12000	9000
F_z (N)	90	60	900	650	1700	1100	2160	1600	1700	1100	3000	1800	3600	2200	6000	4500
M_x (Nm)	12	10	25	20	67	43	88	65	90	55	170	140	300	230	600	450
M_y (Nm)	12	10	32	18	90	70	190	140	110	80	270	230	400	270	750	600
M_z (Nm)	15	12	35	25	120	100	230	170	150	120	300	220	750	500	1350	1150

All forces and torques relate to the following:

existing values / table values: $\frac{Fy}{Fy_{dyn}} + \frac{Fz}{Fz_{dyn}} + \frac{Mx}{Mx_{dyn}} + \frac{My}{My_{dyn}} + \frac{Mz}{Mz_{dyn}} \leq 1$

No-load torque								
Trapezoidal thread	10x3	18x4/18x8	24x5/24x10	24x5/24x10	28x5/28x10	28x5/28x10	32x6/32x12	40x7/40x14
(Nm)	0,3	0,4/0,5	0,6/0,8	0,6/0,8	0,8/1,0	0,8/1,0	0,9/1,1	1,2/1,4
Ballscrew	8x2,5	16x5/16x10	25x5/25x10	25x5/25x10	32x5/32x10	32x5/32x10	32x5/32x10	40x10/40x20
(Nm)	0,15	0,2/0,4	0,4/0,6	0,4/0,6	0,6/0,8	0,6/0,8	0,7/0,9	1,0/1,2
Geometrical moments of inertia of aluminium profile								
I_x mm^4	$4{,}09 \times 10^4$	$1{,}32 \times 10^5$	$6{,}79 \times 10^5$	$6{,}79 \times 10^5$	$18{,}99 \times 10^5$	$18{,}99 \times 10^5$	$44{,}4 \times 10^5$	$101{,}5 \times 10^5$
I_y mm^4	$4{,}00 \times 10^4$	$1{,}34 \times 10^5$	$6{,}97 \times 10^5$	$6{,}97 \times 10^5$	$18{,}97 \times 10^5$	$18{,}97 \times 10^5$	$44{,}8 \times 10^5$	$101{,}5 \times 10^5$
E-Modulus N/mm^2	70000	70000	70000	70000	70000	70000	70000	70000

For life-time calculation of rollers use our homepage.

Driving torque:

$$M_a = \frac{F * P * S_i}{2000 * \pi * \mu} + M_n$$

$$P_a = \frac{M_a * n}{9550}$$

F	= force	(N)
P	= thread pitch	(mm)
Si	= safety factor 1,2 … 2	
M_n	= no-load torque	(Nm)
n	= rpm of screw	(min^{-1})
M_a	= driving torque	(Nm)
μ	= screw efficiency	
P_a	= motor power	(KW)

Efficiency of lead screws:

All ballscrew 0,900

Tr 10x3	0,375	Tr 32x6	0,360
Tr 18x4	0,399	Tr 32x12	0,524
Tr 18x8	0,565	Tr 40x7	0,344
Tr 24x5	0,384	Tr 40x14	0,509
Tr 24x10	0,550		
Tr 28x5	0,349		
Tr 28x10	0,513		

Deflection:

$$f = \frac{F * L^3}{E * I * 192}$$

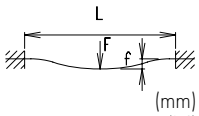

f	= deflection	(mm)
F	= load	(N)
L	= free length	(mm)
E	= elastic modulus 70000	(N/mm^2)
I	= second moment of area	(mm^4)

For the diagram for critical speeds of lead screws refer to chapter 4.2

Linear system **ELT/ELK 30, 40, 60, 60S, 80, 80S, 100, 125**

Dimensions (mm)

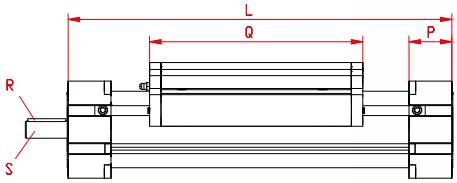

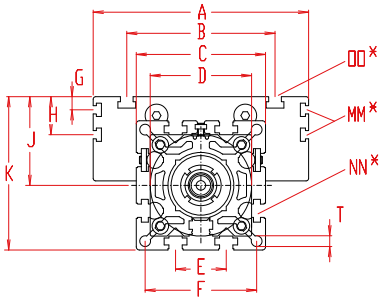

*For slide nuts refer to chapter 2.2 page 2

Increasing the carriage length will increase the basic length by the same amount.

Size ❒	Basic length L	A	B	C	D ± 0,05	E	F	G	H	J	K	MM for	NN for	OO for	P	Q	R	S Ø h6 x length	T	Basic weight	Weight per 100 mm
EL 30	120	70	56	42	40x1	13	35	-	-	26	47	-	M 6	M 6	18	82	-	5x15	4,2	0,7 kg	0,16 kg
EL 40	175	100	66	58	48x1	18	47	--	-	35	64	-	M 6	M 6	25	122	3x3x25	10x27	6,5	1,7 kg	0,37 kg
EL 60	245	144	96	82	62x1	30	69	-	-	49	90	-	M 8	M 8	35	168	5x5x28	14x35	8,5	5,1 kg	0,89 kg
EL 60S	270	170	108	82	62x1	30	69	-	-	53	94	-	M 8	M 8	35	194	5x5x28	14x35	8,5	5,1 kg	0,89 kg
EL 80	285	170	117	102	80x1	40	88	10,5	30,5	70	121	M 6	M 10	M 10	45	194	6x6x40	18x45	8,5	10,0 kg	1,48 kg
EL 80S	305	190	126	102	80x1	40	88	12,5	30	71	122	M 6	M 10	M 8	45	214	6x6x40	18x45	8,5	11,0 kg	1,48 kg
EL 100	410	230	155	130	110x1	50	112	-	29	89	154	M 10	M 10	M 10	55	300	6x6x40	22x45	10,5	19,0 kg	2,00 kg
EL 125	510	295	200	165	130x1	60	142	-	30	107,5	190	M 10	M 12	M 12	65	365	8x7x50	25x55	13,0	33,0 kg	2,89 kg

T **Spindle:**
(T) Trapezoidal thread **(K)** Ballscrew

1 **Selection of screw:**
(1) right hand **(2)** left hand (Ballscrew by inquiry)

0 **Choice of guide body profile:**
(0) Standard **(2)** corrosion-protected guide rods and screws
(4) expanded corrosion-protected version, only for trapezoidal thread (on request)

0 **Choice of carriages:**

(0)

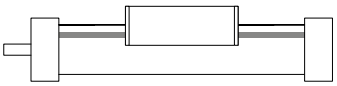

(1)

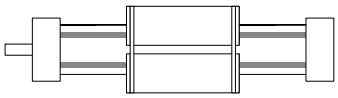

Size	Version 1	
	Q	L
30	94	132
40	138	191
60	184	261
60S	214	290
80	210	301
80S	234	325
100	316	426
125	389	534

0 **Drive version:**
(0) one shaft (locating bearing side) **(1)** one shaft (non-locating bearing side)
(2) shaft on both sides

0 **Selection of screw:**

Size	Standard	Multistart screw	Standard	Multistart screw		
30	**(0)** Tr 10x3		**(0)** Kg 8x2,5	Tr = trapezoidal thread / Kg = ballscrew		
40	**(0)** Tr 18x4	**(1)** Tr 18x8	**(0)** Kg 16x5	**(1)** Kg 16x10	**(2)** Kg 16x16	
60	**(0)** Tr 24x5	**(1)** Tr 24x10	**(0)** Kg 25x5	**(1)** Kg 20x20	**(2)** Kg 25x10	**(3)** Kg 20x50
80	**(0)** Tr 28x5	**(1)** Tr 28x10	**(0)** Kg 32x5	**(1)** Kg 25x25	**(2)** Kg 32x10	
100	**(0)** Tr 32x6	**(1)** Tr 32x12	**(0)** Kg 32x5	**(1)** Kg 32x10	**(2)** Kg 32x20	**(3)** Kg 32x32
125	**(0)** Tr 40x7	**(1)** Tr 40x14	**(0)** Kg 40x10	**(1)** Kg 40x20	**(2)** Kg 40x40	

0 **Ballscrew pitch accuracy:**
(0) 0,05 mm / 300 mm (Standard) **(2)** 0,025 mm / 300 mm

0 **End play of ball nut:**
(0) 0,04 mm (Standard), **(1)** < 0,02 mm, **(2)** 2% apply prestress

Repeatability:
± 0,2 mm Trapezoidal
± 0,025 mm Ballscrew

EL	T	40	1	0	0	0	0	0	0	1500
		Pos.	1	2	3	4	5	6	7	

Basic length + stroke = total length

For combination kits and connecting elements refer to chapter 2.2

Sample ordering code:
ELT40, trapezoidal right hand thread, standard body profile, top carriage, one shaft (locating bearing side), spindle 18x4, 1325 mm stroke

Linear system **ELT/ELK 30, 40, 60, 60S, 80, 80S, 100, 125**

1.1

SPINDLE DRIVEN - RIGHT-HAND AND LEFT-HAND

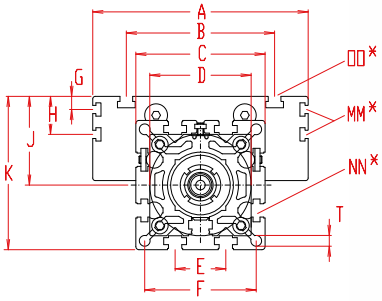

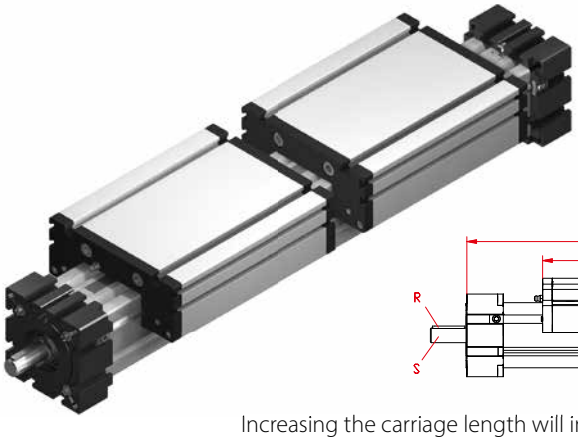

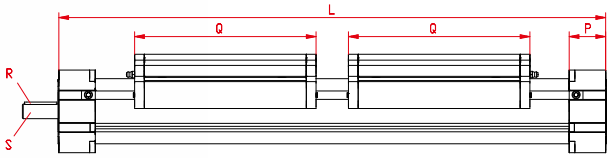

*For slide nuts refer to chapter 2.2 page 2

Increasing the carriage length will increase the basic length by the same amount.

Size ❒	Basic length L	A	B	C	D ± 0,05	E	F	G	H	J	K	MM for	NN for	OO for	P	Q	R	S Ø h6 x length	T	Basic weight	Weight per 100 mm
EL 30	202	70	56	42	40x1	13	35	-	-	26	47	-	M 6	M 6	18	82	-	5 x 15	4,2	1,1 kg	0,16 kg
EL 40	300	100	66	58	48x1	18	47	-	-	35	64	-	M 6	M 6	25	122	3x3x25	10 x 27	6,5	2,5 kg	0,37 kg
EL 60	410	144	96	82	62x1	30	69	-	-	49	90	-	M 8	M 8	35	168	5x5x28	14 x 35	8,5	8,1 kg	0,89 kg
EL 60S	460	170	108	82	62x1	30	69	-	-	53	94	-	M 8	M 8	35	194	5x5x28	14 x 35	8,5	10,1 kg	0,89 kg
EL 80	480	170	117	102	80x1	40	88	10,5	30,5	70	121	M 6	M10	M10	45	194	6x6x40	18 x 45	8,5	15,0 kg	1,48 kg
EL 80S	520	190	126	102	80x1	40	88	12,5	30	71	122	M 6	M10	M 8	45	214	6x6x40	18 x 45	8,5	17,0 kg	1,48 kg
EL 100	720	230	155	130	110x1	50	112	-	29	89	154	M10	M10	M10	55	300	6x6x40	22 x 45	10,5	32,0 kg	2,00 kg
EL 125	880	295	200	165	130x1	60	142	-	30	107,5	190	M10	M12	M12	65	365	8x7x50	25 x 55	13	48,0 kg	2,89 kg

T **Spindle:**
(T) Trapezoidal thread **(K)** Ballscrew

3 **Selection of screw:**
(3) right - left hand **(4)** divided spindle

0 **Choice of guide body profile:**
(0) Standard **(2)** corrosion-protected guide rods and screws
(4) expanded corrosion-protected version, only for trapezoidal thread (on request)

0 **Choice of carriages:**

(0)

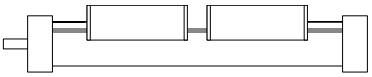

(1)

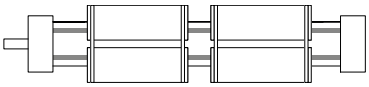

Size	Version 1	
	Q	L
30	94	226
40	138	332
60	184	442
60S	214	502
80	210	512
80S	234	560
100	316	752
125	389	928

0 **Drive version:**
(0) shaft right hand thread **(1)** shaft left hand thread **(2)** shaft on both sides

0 **Selection of screw:**

Size	Standard	Multistart screw	Standard	Multistart screw	
30	**(0)** Tr 10x3		**(0)** Kg 8x2,5*	Tr = trapezoidal thread / Kg = ballscrew	
40	**(0)** Tr 18x4	**(1)** Tr 18x8	**(0)** Kg 16x5	**(1)** Kg 16x10*	**(2)** Kg 16x16*
60	**(0)** Tr 24x5	**(1)** Tr 24x10	**(0)** Kg 25x5	**(1)** Kg 20x20*	**(2)** Kg 25x10*
80	**(0)** Tr 28x5	**(1)** Tr 28x10	**(0)** Kg 32x5	**(1)** Kg 25x25*	**(2)** Kg 32x10*
100	**(0)** Tr 32x6	**(1)** Tr 32x12	**(0)** Kg 32x5	**(1)** Kg 32x10*	**(2)** Kg 32x20* **(3)** Kg 32x32*
125	**(0)** Tr 40x7	**(1)** Tr 40x14	**(0)** Kg 40x10	**(1)** Kg 40x20*	**(2)** Kg 40x40*

* = only for selection of devided spindle

0 **Ballscrew pitch accuracy:**
(0) 0,05 mm / 300 mm (Standard) **(2)** 0,025 mm / 300 mm

0 **End play of ball nut:**
(0) 0,04 mm (Standard), **(1)** < 0,02 mm, **(2)** 2% apply prestress

Repeatability:
± 0,2 mm Trapezoidal
± 0,025 mm Ballscrew

EL	T	40	3	0	0	0	0	0	0	2200
		Pos.	1	2	3	4	5	6	7	

Basic length + stroke = total length

For combination kits and connecting elements refer to chapter 2.2

Sample ordering code:
ELT40, trapezoidal right - left hand thread, standard body profile, 2 top carriage, shaft on right hand side, spindle 18x4, 1900 mm stroke

E | EL | UL

Non driven systems

Linear system **ELR 30, 40, 60, 60S, 80, 80S, 100, 125**

ROLLER GUIDE UNIT WITHOUT DRIVE

Function:
This unit consists of an aluminium hollow section with integral, parallel ground and hardened steel guide rods. The carriage has play-adjustable ball bearing rollers which engage with the guide rods. Two bearing blocks without bearings are fitted. Actuation can be by pneumatic cylinder or other device, or the unit may be used as load-carrying linear slide.

Fitting position: As required, max. length 6.000 mm
Carriage connection: By T-slots and tapped holes
Unit mounting: By T-slots and tapped holes in the mounting surface, mounting sets.

Forces and torques

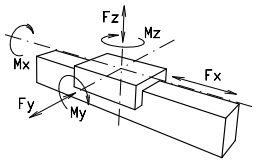

Size	ELR 30		ELR 40		ELR 60		ELR 60 S		ELR 80		ELR 80S		ELR 100		ELR 125	
Forces/Torques	static	dynam.	static	dynam.	static	dynam.	static	dynam.	static	dynam.	static	dynam.	static	dynam.	static	dynam.
F_x (N)	-	-	-	-	-	-			-	-	-	-	-	-	-	-
F_y (N)	90	60	1200	700	3000	2000	4100	3100	3000	2000	4600	3600	8000	6500	12000	9000
F_z (N)	90	60	900	650	1700	1100	2160	1600	1700	1100	3000	1800	3600	2200	6000	4500
M_x (Nm)	10	5	25	20	67	43	88	65	90	55	170	140	300	230	600	450
M_y (Nm)	13	6	32	18	90	70	190	140	110	80	270	230	400	270	750	600
M_z (Nm)	14	7	35	25	120	100	230	170	150	120	300	220	750	500	1350	1150
All forces and torques relate to the following: existing values / table values $\frac{Fy}{Fy_{dyn}} + \frac{Fz}{Fz_{dyn}} + \frac{Mx}{Mx_{dyn}} + \frac{My}{My_{dyn}} + \frac{Mz}{Mz_{dyn}} \leq 1$																
No-load torque																
max. (m/s)	3		4		5		5		6		8		10		10	
Geometrical moments of inertia of aluminium profile																
I_x mm^4	$4{,}09 \times 10^4$		$1{,}32 \times 10^5$		$6{,}79 \times 10^5$		$6{,}79 \times 10^5$		$18{,}99 \times 10^5$		$18{,}99 \times 10^5$		$44{,}4 \times 10^5$		$10{,}2 \times 10^6$	
I_y mm^4	$4{,}00 \times 10^4$		$1{,}34 \times 10^5$		$6{,}97 \times 10^5$		$6{,}97 \times 10^5$		$18{,}97 \times 10^5$		$18{,}97 \times 10^5$		$44{,}8 \times 10^5$		$10{,}2 \times 10^6$	
E-Modulus N/mm^2	70000		70000		70000		70000		70000		7000		70000		70000	

For life-time calculation of rollers use our homepage.

Deflection:

$$f = \frac{F * L^3}{E * I * 192}$$

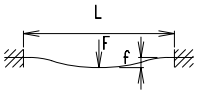

f = deflection (mm)
F = load (N)
L = free length (mm)
E = elastic modulus 70000 (N/mm^2)
I = second moment of area (mm^4)

Linear system **ELR 30, 40, 60, 60S, 80, 80S, 100, 125**

Dimensions (mm)

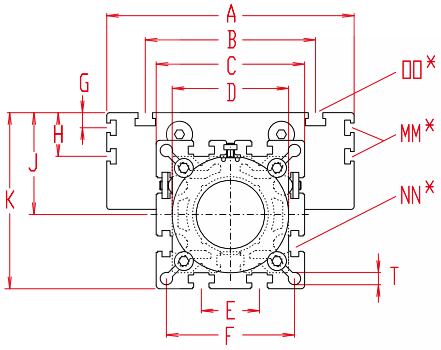

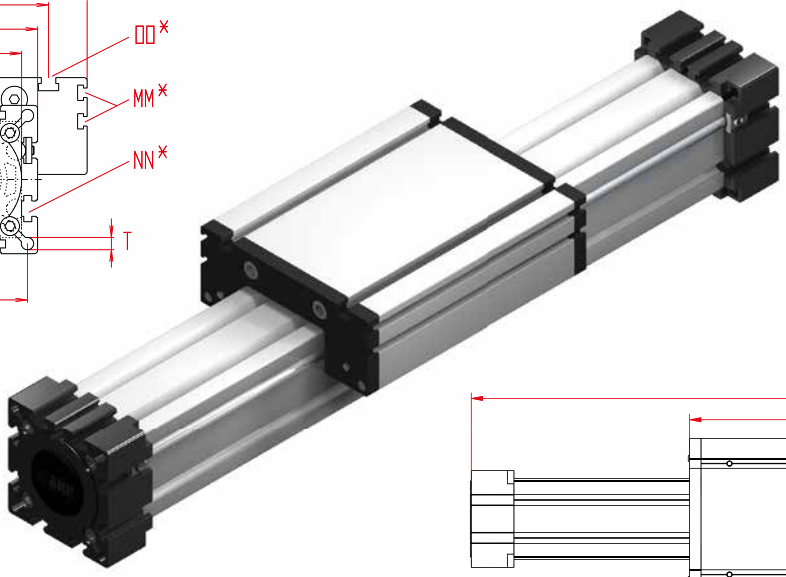

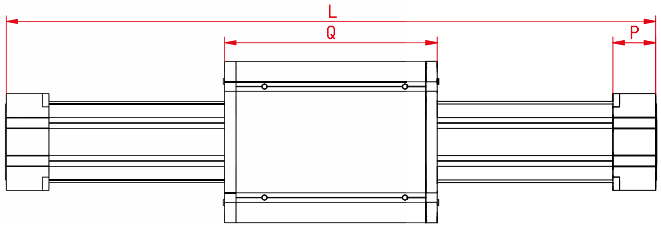

*For slide nuts refer to chapter 2.2 page 2

Increasing the carriage length will increase the basic length by the same amount.

Size ❒	Basic length L	A	B	C	D ± 0,05	E	F	G	H	J	K	MM for	NN for	OO for	P	Q	T	Basic weight	Weight per 100 mm
ELR 30	120	70	56	42	40x1	13	35	-	-	26	47	-	M 6	M 6	18	82	4,2	0,5 kg	0,12 kg
ELR 40	175	100	66	58	48x1	18	47	-	-	35	64	-	M 6	M 6	25	122	6,5	0,9 kg	0,23 kg
ELR 60	245	144	96	82	62x1	30	69	-	-	49	90	-	M 8	M 8	35	168	8,5	3,1 kg	0,61 kg
ELR 60S	265	170	108	82	62x1	30	69	-	-	53	94	-	M 8	M 8	35	194	8,5	4,1 kg	0,61 kg
ELR 80	285	170	117	102	80x1	40	88	10,5	30,5	70	121	M 6	M 10	M 10	45	194	8,5	5,3 kg	0,90 kg
ELR 80S	305	190	126	102	80x1	40	88	12,5	30	71	122	M 6	M 10	M 8	45	214	8,5	6,3 kg	0,90 kg
ELR 100	410	230	155	130	110x1	50	112	-	29	89	154	M 10	M 10	M 10	55	300	10,5	15,1 kg	1,50 kg
ELR 125	510	295	200	165	130x1	60	142	-	30	107,5	190	M 10	M 12	M 12	65	365	13	26,8 kg	2,05 kg

0 **Choice of guide body profile:**
(0) Standard **(2)** corrosion-protected guide rods and screws
(4) expanded corrosion-protected version (depending on the availability of components)

0 **Choice of carriages:**

(0)

(1)

Size	Version 1	
	Q	L
30	94	132
40	138	191
60	184	261
60S	214	284
80	210	301
80S	234	325
100	316	426
125	389	534

ELR	40	0	0	0	0	0	0	0	1500
	Pos.	1	2	3	4	5	6	7	

Basic length + stroke = total length

For combination kits and connecting elements refer to chapter 2.2

Sample ordering code:
ELR 40, non driven system, standard body profile, standard carriage, 1325 mm stroke

Linear system **ELRZ 30, 40, 60, 60S, 80, 80S, 100, 125**

ROLLER GUIDE UNIT WITHOUT DRIVE

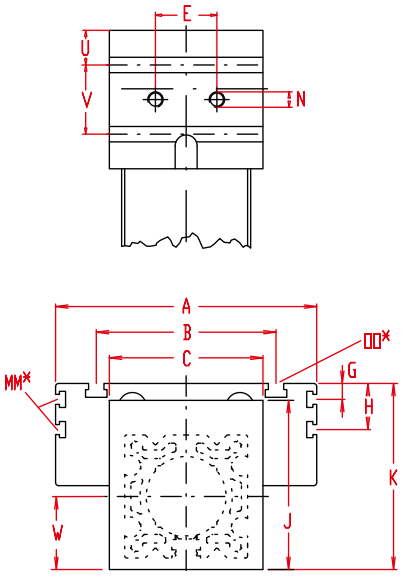

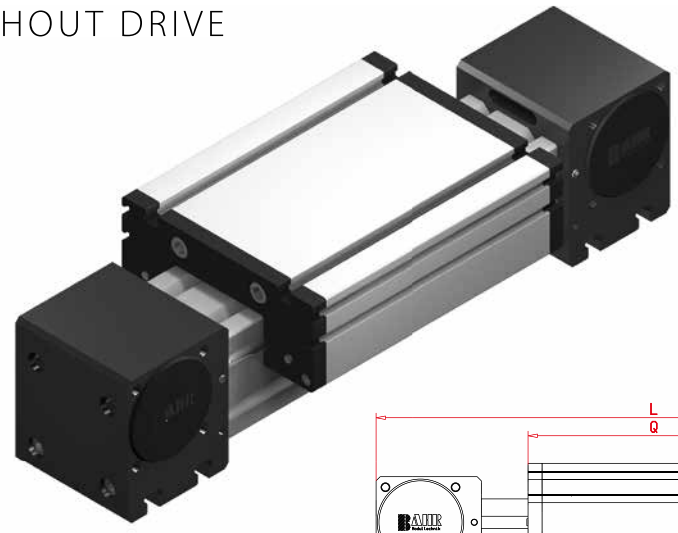

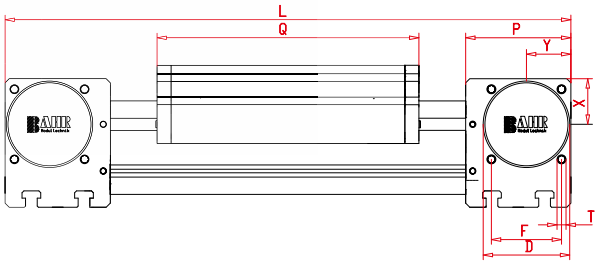

*For slide nuts refer to chapter 2.2 page 2

Increasing the carriage length will increase the basic length by the same amount.

Size ❒	Basic length L	A	B	C	D - 0,05	E	F	G	H	J	K	MM for	N	OO for	P	Q	T	U	V	W	X	Y	Basic weight	Weight per 100 mm
ELRZ 30	158	70	56	42	28	13	25	-	-	44	47	-	M 6	M 6	36	82	M 4	10	16	21	16	16	0,6 kg	0,13 kg
ELRZ 40	225	100	66	58	37	18	32	-	-	58	64	-	M 6	M 6	49	122	M 5	12,5	24	29	20,5	20,5	1,2 kg	0,23 kg
ELRZ 60	290	144	96	80	47	30	42	-	-	82	90	-	M 8	M 8	59	168	M 6	15	30	41	27	26	3,4 kg	0,61 kg
ELRZ 60S	315	170	108	80	47	30	42	-	-	82	94	-	M 8	M 8	59	194	M 6	15	30	41	27	26	4,4 kg	0,61 kg
ELRZ 80	375	170	117	100	68	40	60	10,5	30,5	110	121	M 6	M 10	M 10	90	194	M 8	22,5	45	51	39	38	6,7 kg	0,90 kg
ELRZ 80S	395	190	126	100	68	40	60	12,5	30	110	122	M 6	M 10	M 8	90	214	M 8	22,5	45	51	39	38	7,7 kg	0,90 kg
ELRZ 100	530	230	155	130	90	50	80	-	29	135	154	M 10	M 12	M 10	110	300	M 10	23	64	65	50	50	17,5 kg	1,50 kg
ELRZ 125	625	295	200	160	110	60	100	-	30	167	191	M 10	M 12	M 12	130	365	M 12	38	50	82	60	60	28,3 kg	2,05 kg

0 **Choice of guide body profile:**
(0) Standard **(2)** corrosion-protected guide rods and screws
(4) expanded corrosion-protected version (depending on the availability of components)

Size	Version 1	
	Q	L
30	94	170
40	138	241
60	184	306
60S	214	335
80	210	391
80S	234	415
100	316	546
125	389	649

0 **Choice of carriages:**

(0)

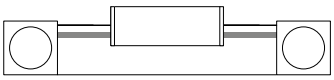

(1)

Application:
This unit can be used as a load-carrying linear slide, or it may be fitted with a suitable pneumatic drive.

ELRZ	40	0	0	0	0	0	0	0	1500
	Pos.	1	2	3	4	5	6	7	

Basic length + stroke = total length

For combination kits and connecting elements refer to chapter 2.2

Sample ordering code:
ELRZ 40, Non driven system, standard body profile, standard carriage, 1275 mm stroke

Linear system **ER 30, 40, 60, 60S, 80, 80S, 100, 125**

Dimensions (mm)

ROLLER GUIDE UNIT WITHOUT DRIVE

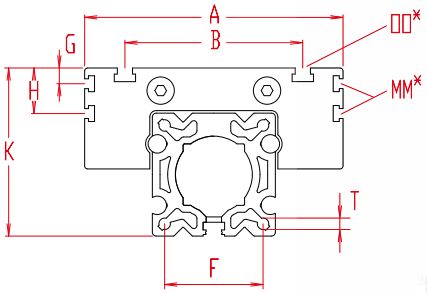

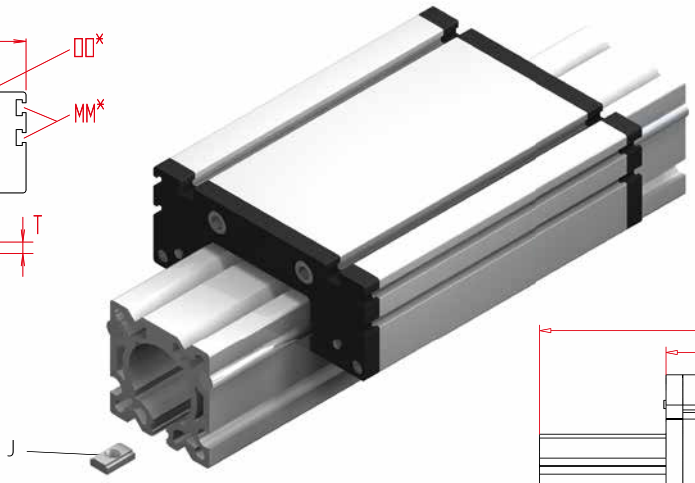

Guiding rods have to be fixed by an additional device, bracket or plate.

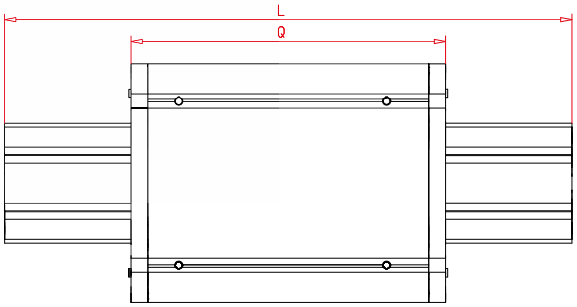

*For slide nuts refer to chapter 2.2 page 2

Increasing the carriage length will increase the basic length by the same amount.

Size ❒	Basic length L	A	B	F	G	H	J	K	MM for	OO for	Q	T	Basic weight	Weight per 100 mm
ER 30	86	70	56	23	-	-	M 6	41	-	M 6	82	M 4	0,5 kg	0,12 kg
ER 40	126	100	66	29	-	-	M 6 - M10	55	-	M 6	122	M 5	0,7 kg	0,23 kg
ER 60	172	144	96	48	--	-	M 6 - M10	79	-	M 8	168	M 6	2,4 kg	0,61 kg
ER 60S	198	170	108	48	--	-	M 6 - M10	83	-	M 8	194	M 6	3,4 kg	0,61 kg
ER 80	198	170	117	64	10,5	30,5	M 6 - M10	110	M 6	M 10	194	M 8	3,7 kg	0,90 kg
ER 80S	218	190	126	64	12,5	30	M 6 - M10	111	M 6	M 8	214	M 8	4,7 kg	0,90 kg
ER 100	304	230	155	80	-	29	M 10	139	M 10	M 10	300	M 10	10,8 kg	1,50 kg
ER 125	369	295	200	100	-	30	M 12	170	M 10	M 12	365	M 12	20,3 kg	2,05 kg

0 **Choice of guide body profile:**
(0) Standard **(2)** corrosion-protected guide rods and screws
(4) expanded corrosion-protected version (depending on the availability of components)

0 **Choice of carriages:**

(0)

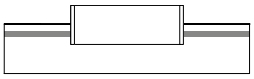

(1)

Size	Version 1	
	Q	L
30	94	98
40	138	142
60	184	188
60S	214	218
80	210	214
80S	234	238
100	316	320
125	389	393

Application:
This unit can be used as a load-carrying linear slide, or it may be fitted with a suitable pneumatic drive.

ER	40	0	0	0	0	0	0	0	1500
	Pos.	1	2	3	4	5	6	7	

Basic length + stroke = total length

For combination kits and connecting elements refer to chapter 2.2

Sample ordering code:
ER 40, Non driven system, standard body profile, standard carriage, 1374 mm stroke

Linear system **E 40, 60, 60S, 80, 80S**

ROLLER GUIDE UNIT WITHOUT DRIVE

SPACE SAVING

Function:
Very low building system achieved by an aluminium guide body with integrated, hardened steel guide rods. The carriage, which has internal linear ball bearings that can be adjusted free of play, moves along the body.

Fitting position: As required, max. length 6.000 mm.
Carriage connection: By T-slots.
Unit mounting: By tapped holes in the mounting surface, bottom surface with T-slots.

Forces and torques

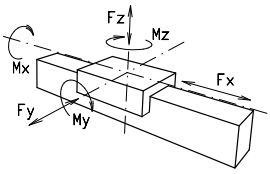

Size	E 40		E 60		E 60 S		E 80		E 80S	
Forces/Torques	static	dynamic	static	dynamic	static	dynamic	static	dynamic	static	dynamic
F_x (N)	-	-	-	-	-	-	-	-	-	-
F_y (N)	1200	700	3000	2000	4100	3100	3000	2000	4600	3600
F_z (N)	900	650	1700	1100	2160	1600	1700	1100	3000	1800
M_x (Nm)	25	20	67	43	88	65	90	55	170	140
M_y (Nm)	32	18	90	70	190	140	110	80	270	230
M_z (Nm)	35	25	120	100	230	170	150	120	300	220

All forces and torques relate to the following:
existing values / table values

$$\frac{Fy}{Fy_{dyn}} + \frac{Fz}{Fz_{dyn}} + \frac{Mx}{Mx_{dyn}} + \frac{My}{My_{dyn}} + \frac{Mz}{Mz_{dyn}} \leq 1$$

Speed					
max. (m/s)	4	5	**5**	6	8
Geometrical moments of inertia of aluminium profile					
I_x mm^4	0,157x10^5	1,71x10^5	1,71x10^5	2,8x10^5	2,8x10^5
I_y mm^4	0,654x10^5	6,1x10^5	6,1x10^5	10,59x10^5	10,59x10^5
E-Modulus N/mm^2	70000	70000	70000	70000	70000

For life-time calculation of rollers use our homepage.

Deflection:

$$f = \frac{F * L^3}{E * I * 192}$$

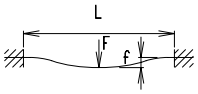

f = deflection (mm)
F = load (N)
L = free length (mm)
E = elastic modulus 70000 (N/mm^2)
I = second moment of area (mm^4)

Linear system **E 40, 60, 60S, 80, 80S**

Dimensions (mm)

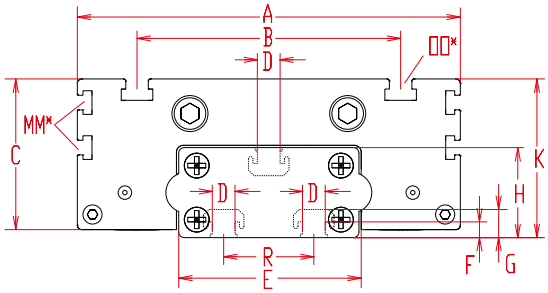

Size 80

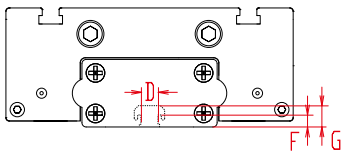

Size 40, 60

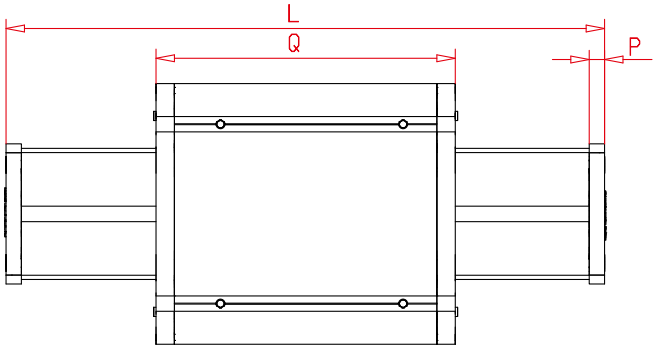

*For slide nuts refer to chapter 2.2 page 2

Increasing the carriage length will increase the basic length by the same amount.

Size	Basic length L	A	B	C	D	E	F	G	H	K	MM for	OO for	P	Q	R	Basic weight	Weight per 100 mm
E 40	136	100	66	34,5	10	40	7	12,5	22	37	-	M 6	6	122	-	1,0 kg	0,13 kg
E 60	186	144	96	48	10	60	7	12,5	30	49	-	M 8	8	168	-	2,2 kg	0,20 kg
E 60S	212	170	108	52	10	60	7	12,5	30	53	-	M 8	8	194	-	3,2 kg	0,20 kg
E 80	215	170	117	66,5	10	80	7	12,5	40	70	M 6	M 10	10	194	40	3,4 kg	0,48 kg
E 80S	245	190	126	67,5	10	80	7	12,5	40	71	M 6	M 8	10	214	40	4,4 kg	0,48 kg

0 **Choice of guide body profile:**
(0) Standard **(2)** corrosion-protected guide rods and screws
(4) expanded corrosion-protected version (depending on the availability of components)

E	40	0	0	0	0	0	0	0	1500
	Pos.	1	2	3	4	5	6	7	

Basic length + stroke = total length

For combination kits and connecting elements refer to chapter 2.2

Sample ordering code:
E 40, non driven system, standard body profile, 1364 mm stroke

Linear system **UL 40, 60, 80**

ROLLER GUIDE UNIT WITHOUT DRIVE

2.1

SPACE SAVING

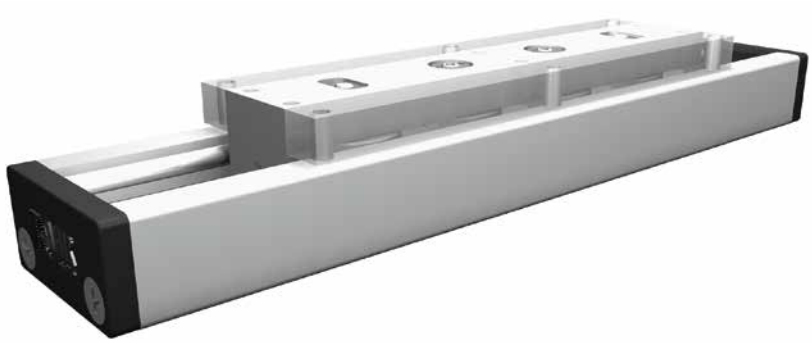

Function:
Very low building roller system achieved by an aluminium guide body with integrated, hardened steel guide rods. The carriage, which has internal linear ball bearings that can be adjusted free of play, moves along the body.

Fitting position: As required, max. length 6.000 mm.
Carriage connection: By tapped holes
Unit mounting: Afterwards by holes or tapped holes

Forces and torques

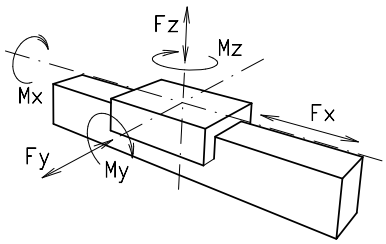

Size	UL 40		UL 60		UL 80	
Forces/Torques	static	dynamic	static	dynamic	static	dynamic
F_x (N)	-	-	-	-	-	-
F_y (N)	1200	700	3000	2000	3000	2000
F_z (N)	900	650	1700	1100	1700	1100
M_x (Nm)	25	20	67	43	90	55
M_y (Nm)	32	18	90	70	110	80
M_z (Nm)	35	25	120	100	150	120

All forces and torques relate to the following:

existing values / table values

$$\frac{Fy}{Fy_{dyn}} + \frac{Fz}{Fz_{dyn}} + \frac{Mx}{Mx_{dyn}} + \frac{My}{My_{dyn}} + \frac{Mz}{Mz_{dyn}} \leq 1$$

Speed			
max. (m/s)	4	5	6
Geometrical moments of inertia of aluminium profile			
I_x mm^4	0,157x10^5	1,71x10^5	2,8x10^5
I_y mm^4	0,654x10^5	6,1x10^5	10,59x10^5
E-Modulus N/mm^2	70000	70000	70000

For life-time calculation of rollers use our homepage.

Deflection:

$$f = \frac{F * L^3}{E * I * 192}$$

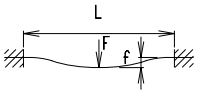

f = deflection (mm)
F = load (N)
L = free length (mm)
E = elastic modulus 70000 (N/mm^2)
I = second moment of area (mm^4)

Linear system **UL 40, 60, 80**

Dimensions (mm)

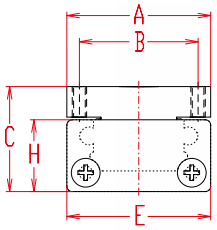

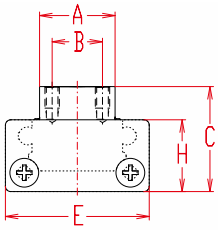

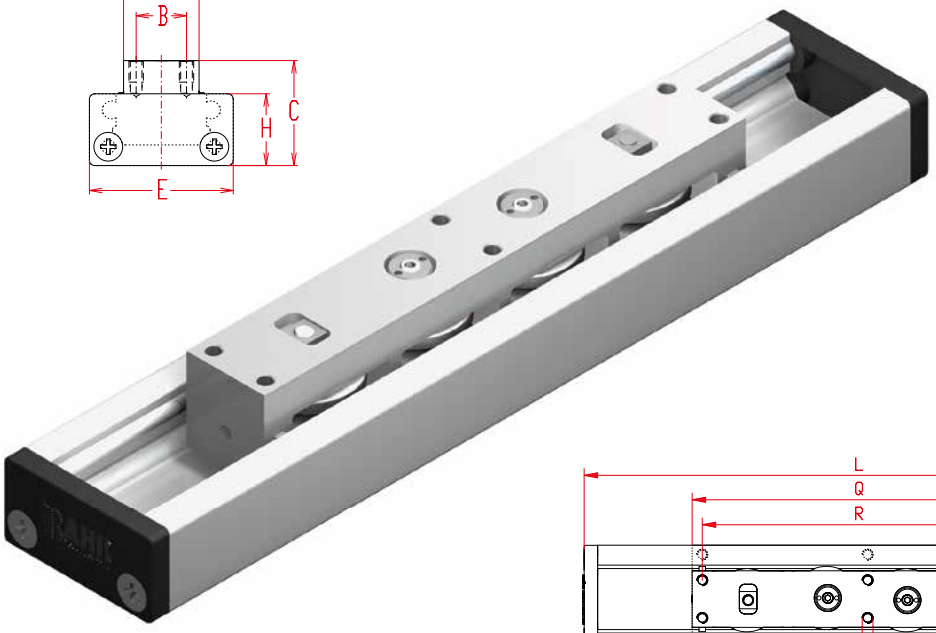

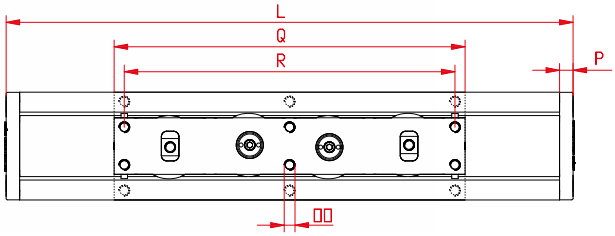

Size	Basic length L	A	B	C	E	H	OO for	P	Q	R	Basic weight	Weight per 100 mm
UL 40	160	40/20	31/13	33	40	22	M 5/M 5x8	6	146*	120	1,2 kg	0,13 kg
UL 60	215	60/29	48/20	43	60	30	M 6/M 6x10	8	194*	180	2,1 kg	0,20 kg
UL 80	285	80/42	66/28	58,5	80	40	M 8/M 8x12	10	260*	245	4,2 kg	0,48 kg

* = the carriage is not available in different lengths

0 **Choice of guide body profile:**
(0) Standard **(2)** corrosion-protected guide rods and screws
(4) expanded corrosion-protected version (depending on the availability of components)

0 **Choice of carriage:**

(0) Standard

(1) harrow carriage

UL	40	0	0	0	0	0	0	0	01500
	Pos.	1	2	3	4	5	6	7	

Basic length + stroke = total length

For combination kits and connecting elements refer to chapter 2.2

Sample ordering code:
UL 40, non driven system, standard body profile, standard carriage (wide version), 1340 mm stroke

Possible mounting styles

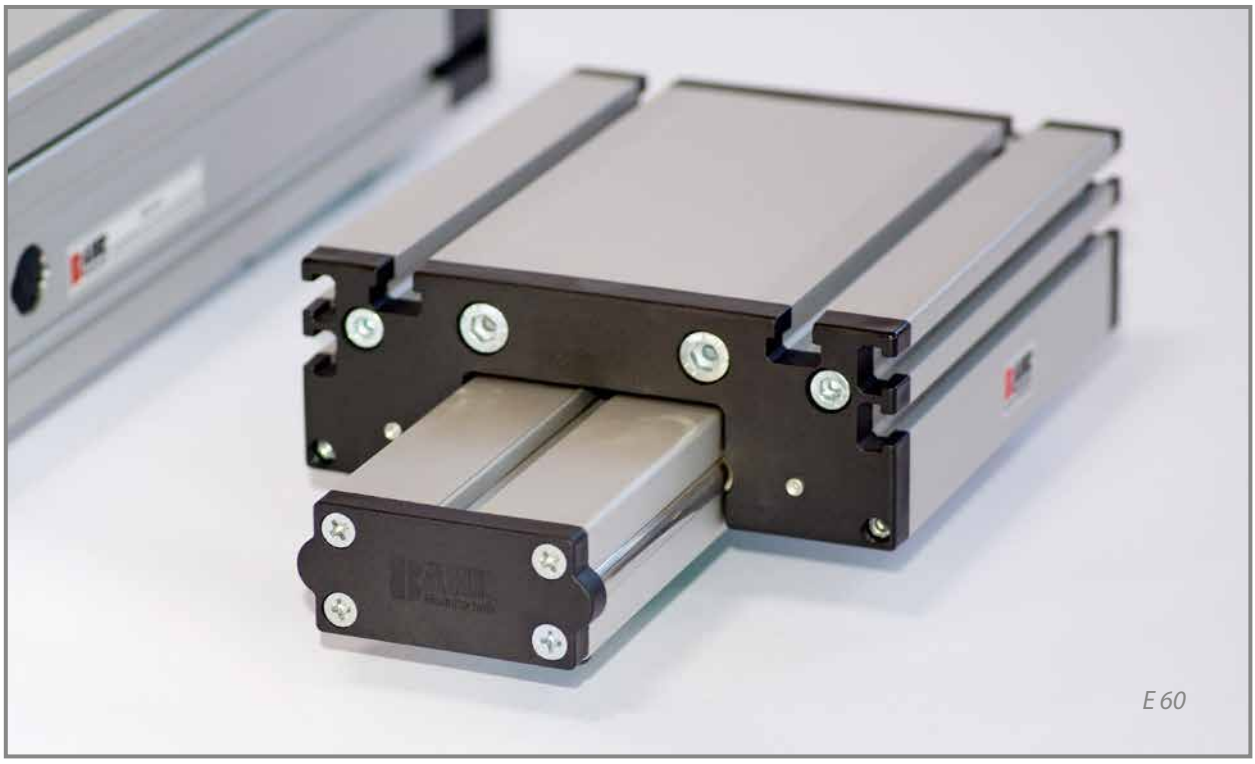

E 60

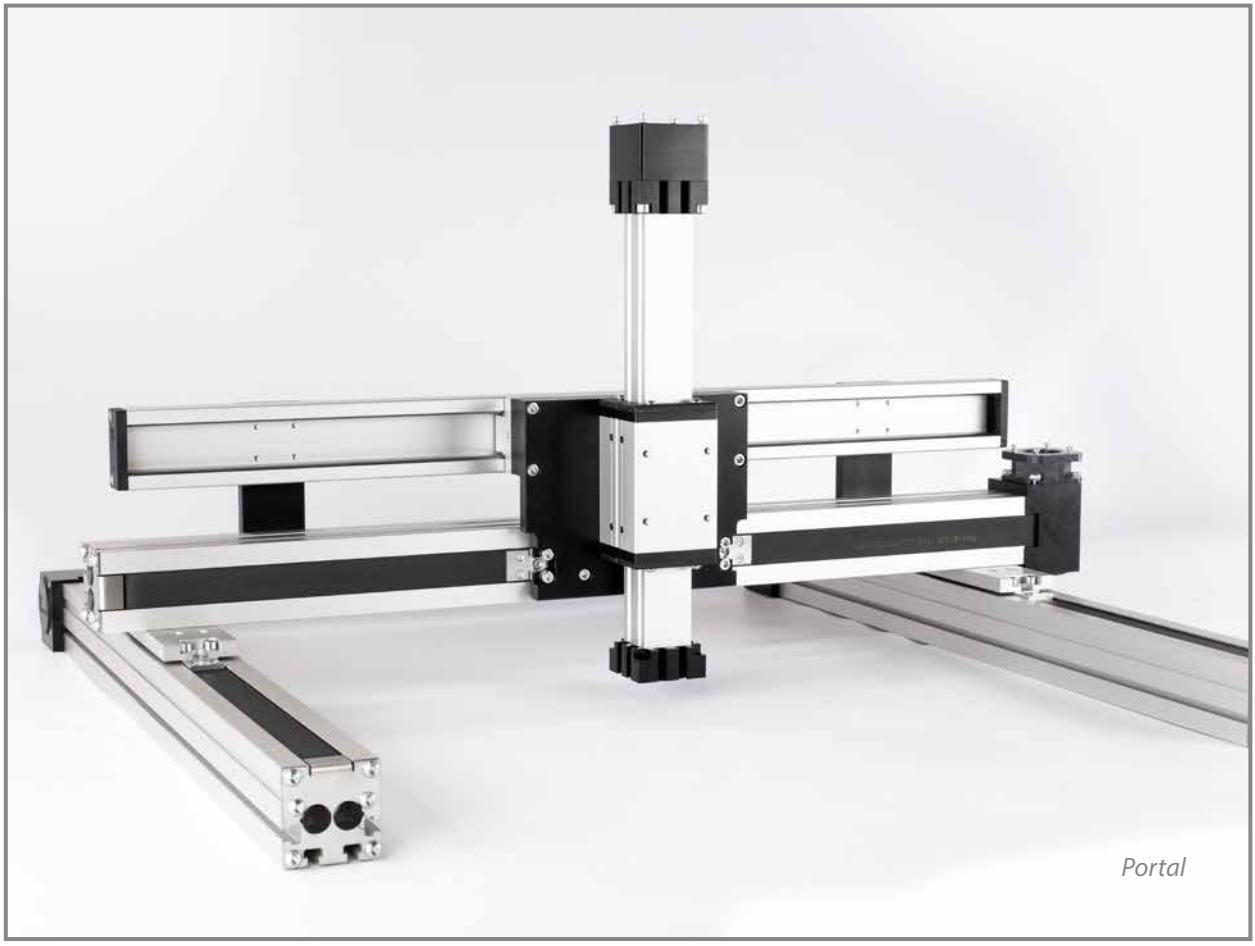

Portal

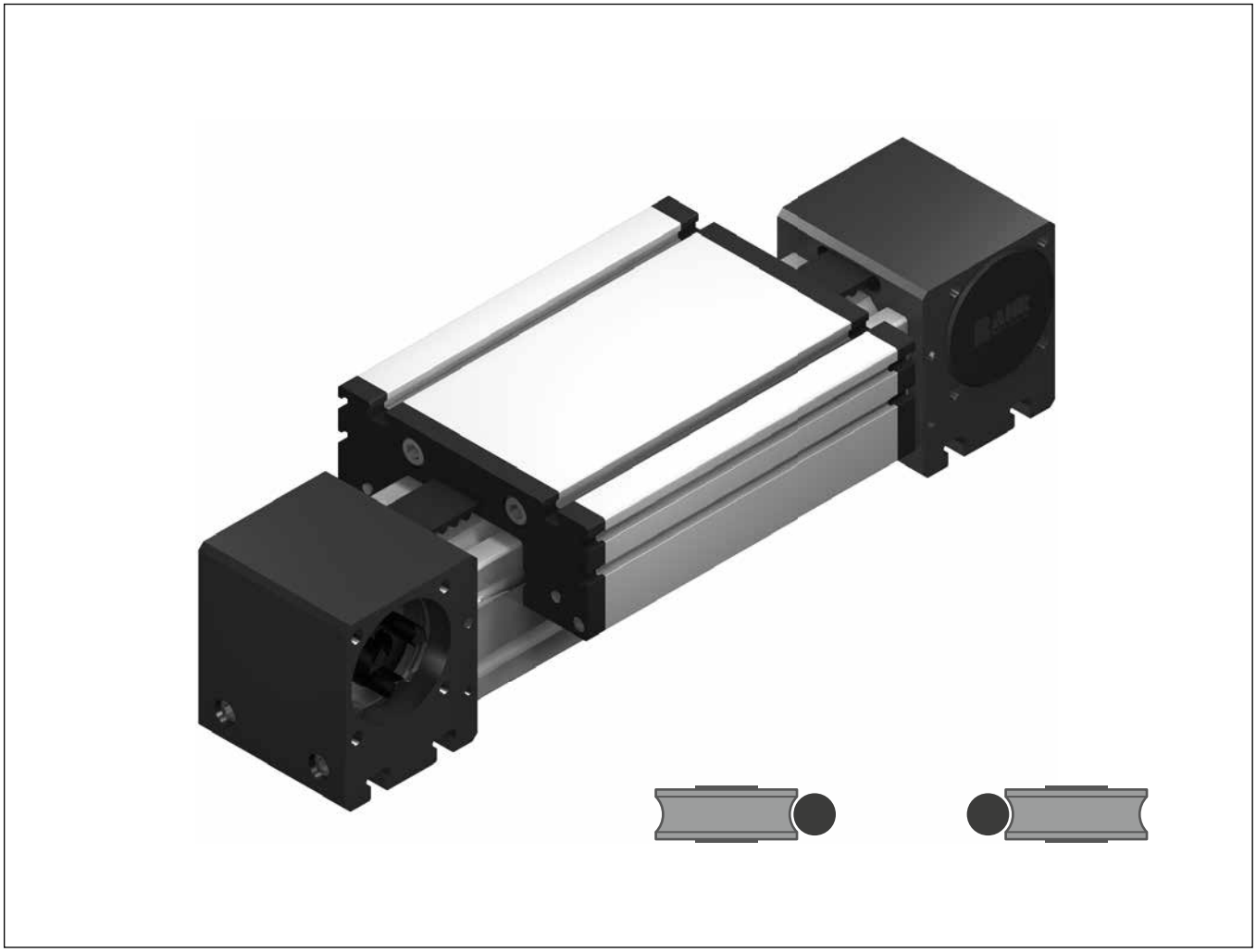

EL
belt driven

Linear system **ELZ 30, 40, 60, 60S, 80, 80S, 100, 125**

BELT DRIVE

- UNIVERSAL SYSTEM
- LONG SERVICE LIFE
- HIGH SPEED
- LONG TRAVERSE PATH >6000 MM

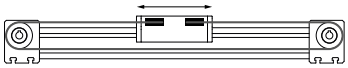

Function:
This linear unit consists of an aluminium square profile with integrated, hardened steel guide rods. The carriage, which has internal linear ball bearings that can be adjusted free of play, is driven along the guide rods by a timing belt. The pulleys have maintenance-free ball bearings. Belt tension can be readjusted by a simple screw adjustment device in the carriage. This device can also be used for symmetrical adjustment of two or more linear units running parallel. With this series, multi-part assembled units with long strokes can be realized.

Forces and torques

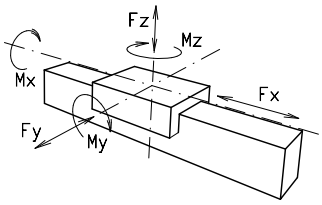

Fitting position: As required. Max. length 6.000 mm without joints.
Carriage mounting: By T-slots.
Unit mounting: By T-slots or tapped holes in the bearing block, mounting sets.
Belt type: HTD with steel reinforcement, no backlash when changing direction, repeatability: ± 0,1 mm.

Size	ELZ 30		ELZ 40		ELZ 60		ELZ 60 S		ELZ 80		ELZ 80 S		ELZ 100		ELZ 125	
Forces/Torques	static	dynamic	static	dynamic	static	dynamic	static	dynamic	static	dynamic	static	dynamic	static	dynamic	static	dynamic
F_x (N)	200	180	390	350	894	800	894	800	1900	1800	1900	1800	4000	3800	5900	5750
F_y (N)	90	60	1200	700	3000	2000	4100	3100	3000	2000	4600	3600	8000	6500	12000	9000
F_z (N)	90	60	900	650	1700	1100	2160	1600	1700	1100	3000	1800	3600	2200	6000	4500
M_x (Nm)	10	5	25	20	67	43	88	65	90	55	170	140	300	230	600	450
M_y (Nm)	13	6	32	18	90	70	190	140	110	80	270	230	400	270	750	600
M_z (Nm)	14	7	35	25	120	100	230	170	150	120	300	220	750	500	1350	1150

All forces and torques relate to the following:

existing values / table values

$$\frac{Fy}{Fy_{dyn}} + \frac{Fz}{Fz_{dyn}} + \frac{Mx}{Mx_{dyn}} + \frac{My}{My_{dyn}} + \frac{Mz}{Mz_{dyn}} \leq 1$$

No-load torque								
Nm	0,2	0,3	0,6	0,7	0,9	1,2	1,4	1,8
Speed								
(m/s) max	2	4	5	7	6	8	10	10
Tensile force								
permanent (N)	200	390	900	900	1900	1900	4000	5900
0,2 s (N)	280	480	1000	1000	2090	2090	4300	6350
Geometrical moments of inertia of aluminium profile								
I_x mm^4	$4{,}09 \times 10^4$	$1{,}32 \times 10^5$	$6{,}79 \times 10^5$	$6{,}79 \times 10^5$	$18{,}99 \times 10^5$	$18{,}99 \times 10^5$	$44{,}4 \times 10^5$	$101{,}5 \times 10^5$
I_y mm^4	$4{,}00 \times 10^4$	$1{,}34 \times 10^5$	$6{,}97 \times 10^5$	$6{,}97 \times 10^5$	$18{,}97 \times 10^5$	$18{,}97 \times 10^5$	$44{,}8 \times 10^5$	$101{,}5 \times 10^5$
E-Modulus N/mm^2	70000	70000	70000	70000	70000	70000	70000	70000

For life-time calculation of rollers use our homepage.

Driving torque:

$$M_a = \frac{F * P * S_i}{2000 * \pi} + M_n$$

$$P_a = \frac{M_a * n}{9550}$$

F	= force	(N)
P	= pulley action perimeter	(mm)
Si	= safety factor 1,2 … 2	
M_n	= no-load torque	(Nm)
n	= rpm pulley	(min^{-1})
M_a	= driving torque	(Nm)
P_a	= motor power	(KW)

Deflection:

$$f = \frac{F * L^3}{E * I * 192}$$

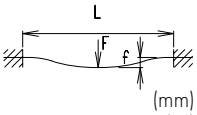

f	= deflection	(mm)
F	= load	(N)
L	= free length	(mm)
E	= elastic modulus 70000	(N/mm^2)
I	= second moment of area	(mm^4)

Linear system **ELZ 30, 40, 60, 60S, 80, 80S, 100, 125**

Dimensions (mm)

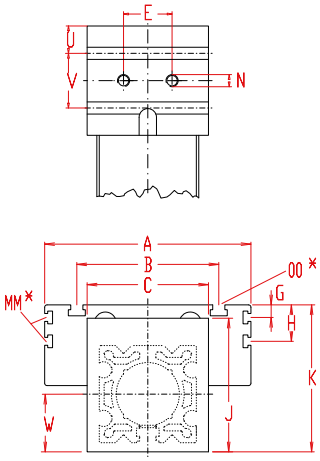

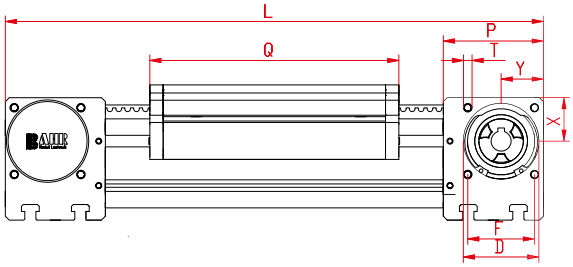

*For slide nuts refer to chapter 2.2 page 2

Increasing the carriage length will increase the basic length by the same amount.

Size ❒	Basic length L	A	B	C	D -0,05	E	F	G	H	J	K	MM for	N	OO for	P	Q	T	U	V	W	X	Y	Basic weight	Weight per 100 mm
ELZ 30	158	70	56	42	28	13	25	-	-	44	47	-	M 5	M 6	36	82	M 4	10	16	21	16	16	0,8 kg	0,13 kg
ELZ 40	225	100	66	58	37	18	32	-	-	58	64	-	M 6	M 6	49	122	M 5	12,5	24	29	20,5	20,5	1,9 kg	0,24 kg
ELZ 60	290	144	96	80	47	30	42	-	-	82	90	-	M 8	M 8	59	168	M 6	15	30	41	27	26	4,8 kg	0,62 kg
ELZ 60 S	315	170	108	80	47	30	42	-	-	82	94	-	M 8	M 8	59	194	M 6	15	30	41	27	26	5,8 kg	0,62 kg
ELZ 80	375	170	117	100	68	40	60	10,5	30,5	110	121	M 6	M 10	M 10	90	194	M 8	22,5	45	51	39	38	10,0 kg	1,00 kg
ELZ 80 S	395	190	126	100	68	40	60	12,5	30	110	122	M 6	M 10	M 8	90	214	M 8	22,5	45	51	39	38	11,0 kg	1,00 kg
ELZ 100	530	230	155	130	90	50	80	-	29	135	154	M 10	M 12	M 10	110	300	M 10	23	64	65	50	50	24,0 kg	1,60 kg
ELZ 125	625	295	200	160	110	60	100	-	30	167	191	M 10	M 12	M 12	130	365	M 10	38	50	82	60	60	37,0 kg	2,10 kg

0 **Choice of guide body profile:**
(0) Standard **(2)** corrosion-protected guide rods and screws
(4) expanded corrosion-protected version (depending on the availability of components)

Size	Version 1	
	Q	L
30	94	170
40	138	241
60	184	306
60S	214	335
80	210	391
80S	234	415
100	316	546
125	389	649

0 **Choice of carriages:**

(0)

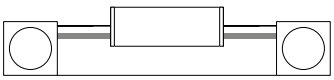

(1)

0 **Drive version:**

0

0 1 2 3 4 5 6 7 8 9

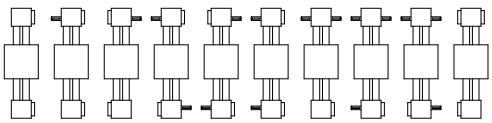

Version 9 is the same as 0, but with double sided coupling claw.

The standard version is supplied without shaft. A shaft can be retrofitted by inserting it into the pulley bore and securing it with 2 locking rings or tension sets (size 100 and 125).

Belt table:

Code No.		Size	Belt	mm/rev.	Number of teeth
0	**1**	**30**	3M12	75	25
0	**3**	**40**	5M15	100	20
0	**4**	**60 (S)**	5M25	130	26
0	**7**	**80 (S)**	8M30	192	24
0	**9**	**100**	8M50	256	32
1	**0**	**125**	8M70	304	38

Shaft dimensions / Coupling claw:

Size	Shaft ø h6 x length	Key	Coupling
30	6 x 15	2x2x12	7
40	10 x 27	3x3x22	9
60 (S)	14 x 35	5x5x28	14
80 (S)	18 x 45	6x6x40	19
100	22 x 45	6x6x40	24
125	30 x 55	8x7x50	28

ELZ	40	1	0	0	0	0	3	1	1500
	Pos.	1	2	3	4	5	6	7	

Basic length + stroke = total length

For combination kits and connecting elements refer to chapter 2.2

Sample ordering code:
ELZ 40 with standard body profile, standard carriage, coupling claw on one side, 1275 mm stroke.

Linear system **ELZ** Ex **30, 40, 60, 60S, 80, 80S, 100, 125**

BELT DRIVE - EX GUIDE

UNIVERSAL SYSTEM
EX-GUIDE
HIGH SPEED

3.1

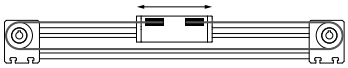

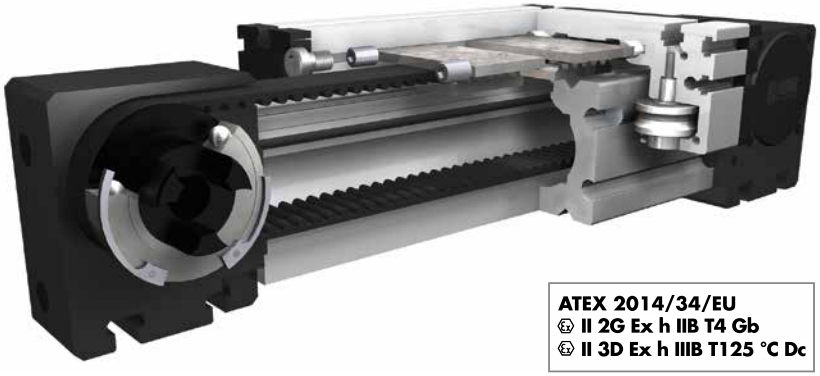

ATEX 2014/34/EU
Ex II 2G Ex h IIB T4 Gb
Ex II 3D Ex h IIIB T125 °C Dc

Function:
Like ELZ. The positioning system is suitable for use according to the intended purpose in potentially explosive areas (see ATEX 2014/34/EU marking). An operating manual is included in the scope of delivery. The system is certified for the following areas:

ATEX 2014/34/EU **II 2G EX h IIB T4 Gb:**
All application areas except for underground mining. Gas atmosphere category 2, explosion protection category: protection due to secure construction (design security). Equipment group IIB. Temperature class T4=135°C, EPL Gb.

ATEX 2014/34/EU **II 3D EX h IIIB T125 °C Dc:**
All application areas except for underground mining. Dust atmosphere category 3. Maximum permissible surface temperature: 125°C, EPL Dc.

Forces and torques

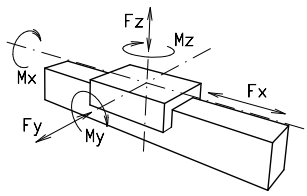

Fitting position: As required, max. length 6.000 mm.
Carriage mounting: T-slots
Unit mounting: By T-slots or tapped holes in the bearing block, mounting sets.
Belt type: HTD with steel reinforcement, no backlash when changing direction, repeatability: ± 0,1 mm.

Size	ELZex 40		ELZex 60		ELZex 60 S		ELZex 80		ELZex 80 S		ELZex 100		ELZex 125	
Forces/Torques	static	dynamic	static	dynamic	statisch	dynamic	static	dynamic	static	dynamic	static	dynamic	static	dynamic
F_x (N)	178	142	312	250	312	250	1083	866	1083	866	1127	902	2067	1654
F_y (N)	517	414	1330	1064	1910	1528	1584	1267	2219	1775	3100	2480	4980	3984
F_z (N)	355	284	742	594	935	748	613	490	1052	842	1292	1034	2190	1752
M_x (Nm)	12	10	36	29	52	41	36	29	67	54	101	81	220	176
M_y (Nm)	13	11	39	32	66	53	39	32	87	70	136	109	280	224
M_z (Nm)	19	15	70	56	137	110	100	81	182	146	326	260	636	509

All forces and torques relate to the following

existing values / table values

$$\frac{Fy}{Fy_{dyn}} + \frac{Fz}{Fz_{dyn}} + \frac{Mx}{Mx_{dyn}} + \frac{My}{My_{dyn}} + \frac{Mz}{Mz_{dyn}} \leq 1$$

No-load torque						
Nm	0,3	0,6	0,7	0,9	1,2	1,4	1,8
Speed						
(m/s) max	1	1	1	1	1	1	1
Tensile force						
permanent (N)	178	312	312	1083	1083	1127	2067
Geometrical moments of inertia of aluminium profile						
I_x mm⁴	$1{,}32 \times 10^5$	$6{,}79 \times 10^5$	$6{,}79 \times 10^5$	$18{,}99 \times 10^5$	$18{,}99 \times 10^5$	$44{,}4 \times 10^5$	$101{,}5 \times 10^5$
I_y mm⁴	$1{,}34 \times 10^5$	$6{,}97 \times 10^5$	$6{,}97 \times 10^5$	$18{,}97 \times 10^5$	$18{,}97 \times 10^5$	$44{,}8 \times 10^5$	$101{,}5 \times 10^5$
E-Modulus N/mm²	70000	70000	70000	70000	70000	70000	70000

For life-time calculation of rollers use our homepage.

Driving torque:

$$M_a = \frac{F * P * S_i}{2000 * \pi} + M_n$$

$$P_a = \frac{M_a * n}{9550}$$

F = force (N)
P = pulley action perimeter (mm)
Si = safety factor 1,2 … 2
M_n = no-load torque (Nm)
n = rpm pulley (min^{-1})
M_a = driving torque (Nm)
P_a = motor power (KW)

Deflection:

$$f = \frac{F * L^3}{E * I * 192}$$

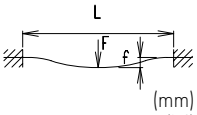

f = deflection (mm)
F = load (N)
L = free length (mm)
E = elastic modulus 70000 (N/mm²)
I = second moment of area (mm⁴)

Linear system **ELZ** Ex **30, 40, 60, 60S, 80, 80S, 100, 125**

Dimensions (mm)

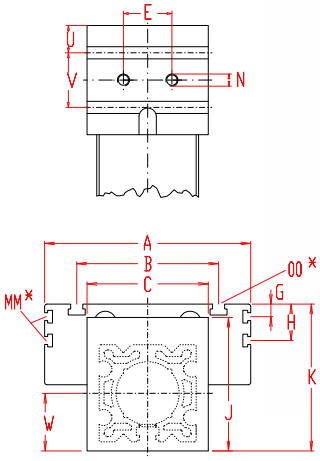

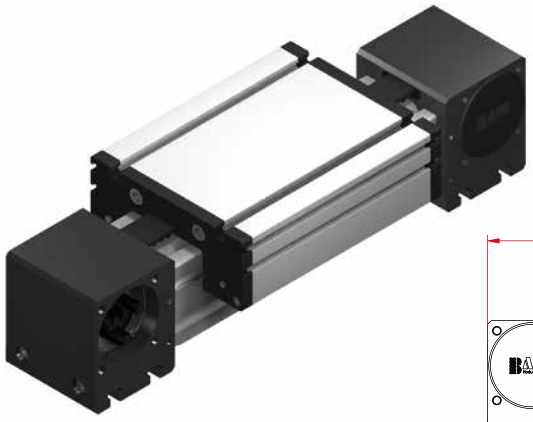

ATEX 2014/34/EU
Ex II 2G Ex h IIB T4 Gb
Ex II 3D Ex h IIIB T125 °C Dc

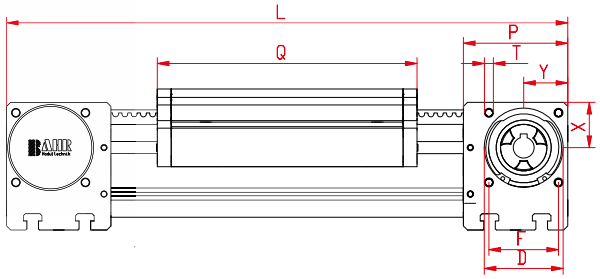

*For slide nuts refer to chapter 2.2 page 2

Increasing the carriage length will increase the basic length by the same amount.

Size ❒	Basic length L	A	B	C	D -0,05	E	F	G	H	J	K	MM for	N	OO for	P	Q	T	U	V	W	X	Y	Basic weight	Weight per 100 mm
ELZex 40	225	100	66	58	37	18	32	-	-	58	64	-	M 6	M 6	49	122	M 5	12,5	24	29	20,5	20,5	1,9 kg	0,24 kg
ELZex 60	290	144	96	80	47	30	42	-	-	82	90	-	M 8	M 8	59	168	M 6	15	30	41	27	26	4,8 kg	0,62 kg
ELZex 60 S	315	170	108	80	47	30	42	-	-	82	94	-	M 8	M 8	59	194	M 6	15	30	41	27	26	5,8 kg	0,62 kg
ELZex 80	375	170	117	100	68	40	60	10,5	30,5	110	121	M 6	M 10	M 10	90	194	M 8	22,5	45	51	39	38	10,0 kg	1,00 kg
ELZex 80 S	395	190	126	100	68	40	60	12,5	30	110	122	M 6	M 10	M 8	90	214	M 8	22,5	45	51	39	38	11,0 kg	1,00 kg
ELZex 100	530	230	155	130	90	50	80	-	29	135	154	M 10	M 12	M 10	110	300	M 10	23	64	65	50	50	24,0 kg	1,60 kg
ELZex 125	625	295	200	160	110	60	100	-	30	167	191	M 10	M 12	M 12	130	365	M 10	38	50	82	60	60	37,0 kg	2,10 kg

0 **Choice of guide body profile:**
(0) Standard **(2)** corrosion-protected guide rods and screws

Size	Version 1	
	Q	L
40	138	241
60	184	306
60S	214	335
80	210	391
80S	234	415
100	316	546
125	389	649

0 **Choice of carriages:**

(0)

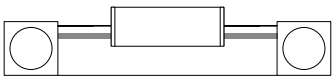

(1)

0 **Drive version:**

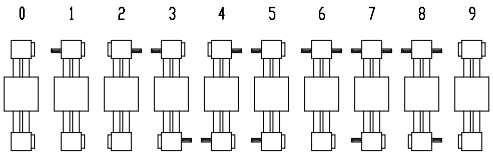

Version 9 is the same as 0, but with double sided coupling claw.

The standard version is supplied without shaft. A shaft can be retrofitted by inserting it into the pulley bore and securing it with 2 locking rings or tension sets (size 100 and 125).

Belt table:

Code No.		Size	Belt	mm/rev.	Number of teeth
0	**3**	**40**	5M15	100	20
0	**4**	**60 (S)**	5M25	130	26
0	**7**	**80 (S)**	8M30	192	24
0	**9**	**100**	8M50	256	32
1	**0**	**125**	8M70	304	38

Shaft dimensions / Coupling claw:

Size	Shaft ø h6 x length	Key	Coupling
40	10 x 27	3x3x22	9
60 (S)	14 x 35	5x5x28	14
80 (S)	18 x 45	6x6x40	19
100	22 x 45	6x6x40	24
125	30 x 55	8x7x50	28

ELZex	40	1	0	0	0	0	3	1	1500
	Pos.	1	2	3	4	5	6	7	

Basic length + stroke = total length

For combination kits and connecting elements refer to chapter 2.2

Sample ordering code:
ELZex 40, standard body profile, standard carriage, coupling claw on one side, 1275 mm stroke.

Linear system **ELZ 30, 40, 60, 60S, 80, 80S, 100, 125**

BELT DRIVE WITH TWO CARRIAGES MOVING IN OPPOSITE DIRECTIONS

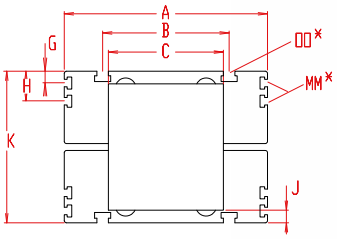

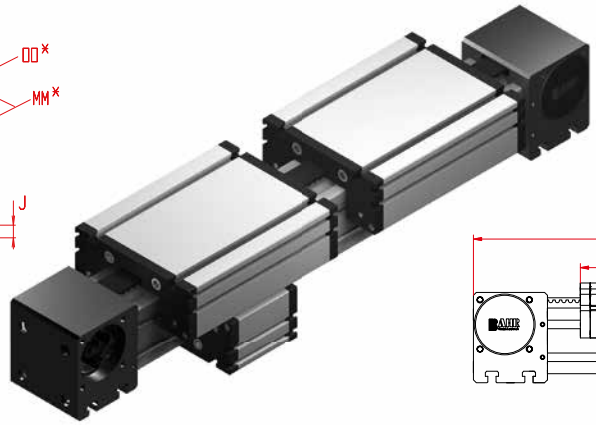

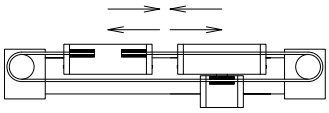

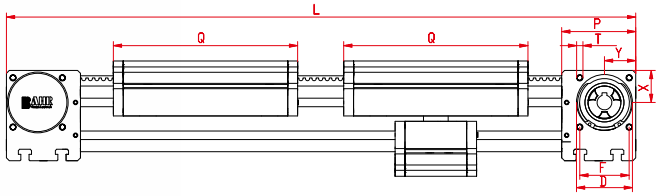

*For slide nuts refer to chapter 2.2 page 2

Increasing the carriage length will increase the basic length by the same amount.

Size ❒	Basic length L	A	B	C	D - 0,05	F	G	H	J	K	MM for	OO for	P	Q	T	X	Y	Basic weight	Weight per 100 mm
ELZ 30	250	70	56	42	28	25	-	-	5	52	-	M 6	36	82	M 4	16	16	1,2 kg	0,13 kg
ELZ 40	350	100	66	58	37	32	-	-	6	70	-	M 6	49	122	M 5	20,5	20,5	2,8 kg	0,24 kg
ELZ 60	460	144	96	80	47	42	-	-	8	98	-	M 8	59	168	M 6	27	26	7,4 kg	0,62 kg
ELZ 60S	510	170	108	80	47	42	-	-	12	106	-	M 8	59	194	M 6	27	26	7,4 kg	0,62 kg
ELZ 80	570	170	117	100	68	60	10,5	30,5	19	140	M 6	M10	90	194	M 8	39	39	15,0 kg	1,00 kg
ELZ 80S	610	190	126	100	68	60	12,5	30	21	142	M 6	M 8	90	214	M 8	39	39	17,0 kg	1,00 kg
ELZ 100	830	230	155	130	90	80	-	29	24	178	M10	M10	110	300	M10	50	50	34,0 kg	1,60 kg
ELZ 125	990	295	200	160	110	100	-	30	25,5	216	M10	M12	130	365	M10	60	60	53,5 kg	2,10 kg

Size	Version 1	
	Q	L
30	94	274
40	138	382
60	184	492
60S	214	554
80	210	602
80S	234	650
100	316	862
125	389	1038

0 **Choice of guide body profile:**
(0) Standard **(2)** corrosion-protected guide rods and screws
(4) expanded corrosion-protected version (depending on the availability of components)

0 **Choice of carriages:**

(0)

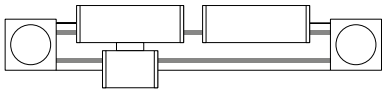

(1)

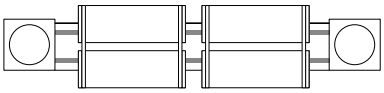

0 **Coupling - shaft mounting:**

0

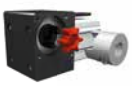

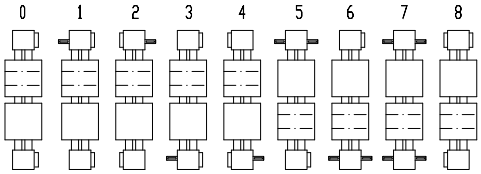

Version 8 is the same as 0, but with double sided coupling claw.

The standard version is supplied without shaft. A shaft can be retrofitted by inserting it into the pulley bore and securing it with 2 locking rings or tension sets (size 100 and 125).

Belt table:

Code No.		Size	Belt	mm/rev.	Number of teeth
0	**1**	**30**	3M12	75	25
0	**3**	**40**	5M15	100	20
0	**4**	**60 (S)**	5M25	130	26
0	**7**	**80 (S)**	8M30	192	24
0	**9**	**100**	8M50	256	32
1	**0**	**125**	8M70	304	38

Shaft dimensions / Coupling claw:

Size	Shaft ø h6 x length	Key	Coupling
30	6 x 15	2x2x12	7
40	10 x 27	3x3x22	9
60 (S)	14 x 35	5x5x28	14
80 (S)	18 x 45	6x6x40	19
100	22 x 45	6x6x40	24
125	30 x 55	8x7x50	28

ELZ	40	3	0	0	0	0	3	1	1500
	Pos.	1	2	3	4	5	6	7	

Basic length + stroke = total length

For combination kits and connecting elements refer to chapter 2.2

Sample ordering code:
ELZ 40, right/left hand with standard body profile, standard carriage, coupling claw on one side, 1150 mm stroke.

Linear system **ELZG 30, 40, 60, 60S, 80, 80S**

Dimensions (mm)

TOOTHED BELT DRIVE WITH REVOLVING TOOTHED BELT

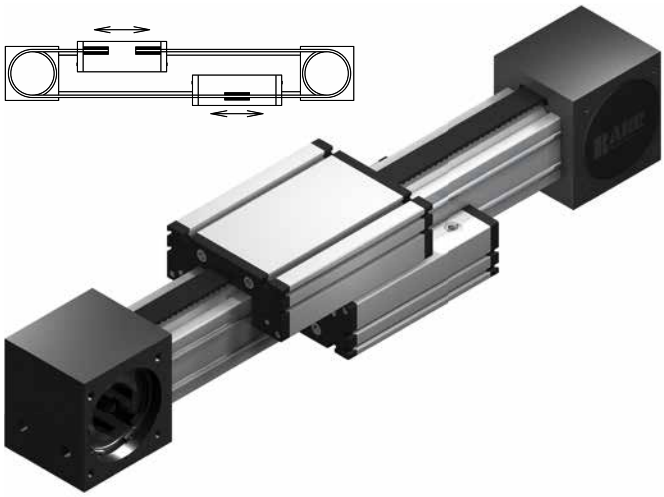

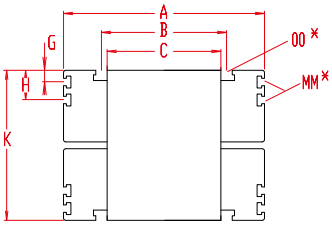

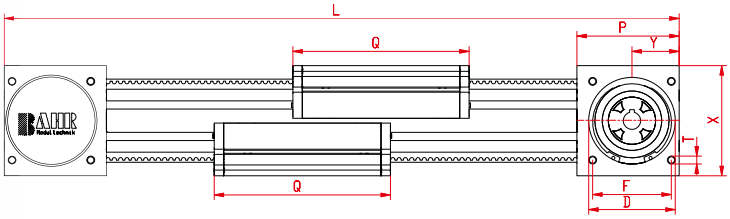

*For slide nuts refer to chapter 2.2 page 2

Increasing the carriage length will increase the basic length by the same amount.

Size ❒	Basic length L	A	B	C	D - 0,05	F	G	H	K	MM for	OO for	P	Q	T	X	Y	Basic weight	Weight per 100 mm
ELZG 30	195	70	56	48	47	42	-	-	52	-	M 6	55	82	M 6	52	27	1,1 kg	0,13 kg
ELZG 40	265	100	66	60	55	55	-	-	70	-	M 6	70	122	M 6	70	33	4,0 kg	0,29 kg
ELZG 60	365	144	96	88	80	70	-	-	98	-	M 8	95	168	M 8	98	46	10,3 kg	0,65 kg
ELZG 60S	390	170	108	88	80	70	-	-	106	-	M 8	95	194	M 8	98	46	12,3 kg	0,65 kg
ELZG 80	460	170	117	118	110	100	10,5	30,5	140	M 6	M 10	130	194	M 10	140	60	20,5 kg	1,15 kg
ELZG 80S	480	190	126	118	110	100	12,5	30	142	M 6	M 8	130	214	M 10	140	60	21,5 kg	1,15 kg

0 **Choice of guide body profile:**
(0) Standard **(2)** corrosion-protected guide rods and screws
(4) expanded corrosion-protected version (depending on the availability of components)

0 **Choice of carriages:**

(0)

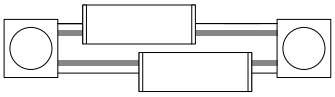

For standard carriage length see 'Q' in table. The carriages can be delivered in any non-standard length upon request; the longer the carriage, the higher the load capacity.

0 **Drive version:**

0

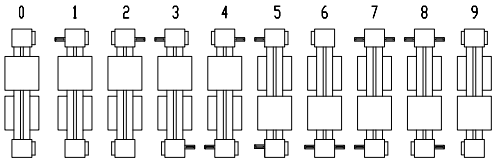

Version 9 is the same as 0, but with double sided coupling claw.

The standard version is supplied without shaft. A shaft can be retrofitted by inserting it into the pulley bore and securing it with 2 locking rings or tension sets (size 80).

Belt table:

Code No.		Size	Belt	mm/rev.	Number of teeth
0	**1**	**30**	3M12	120	40
0	**3**	**40**	5M15	160	32
0	**4**	**60 (S)**	5M25	220	44
0	**7**	**80 (S)**	8M30	320	40

Shaft dimensions / Coupling claw:

Size	Shaft Ø h6 x length	Key	Coupling
30	10 x 27	3x3x25	9
40	14 x 35	5x5x28	14
60 (S)	18 x 45	6x6x40	19
80 (S)	22 x 45	6x6x40	24

ELZG	40	1	0	0	0	0	3	1	1500
	Pos.	1	2	3	4	5	6	7	

Basic length + stroke = total length

For combination kits and connecting elements refer to chapter 2.2

Sample ordering code:
ELZG 40, standard body profile, standard carriage and coupling claw on one side, 1235 mm stroke.

Linear system **ELZ-NK 60, 60S, 80, 80S, 100**

BELT DRIVE - DEEP-FREEZE AREA

- DEEP-FREEZE CONDITIONS
- LONG SERVICE LIFE
- FOOD INDUSTRY
- RELIABILITY

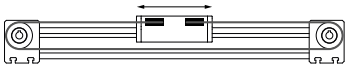

Operating temperature range
-30 °C ≤ -10 °C
NORDKAP

Function:
Highly dynamic linear unit with toothed belt drive and external roller guides. Reliable and low-maintenance guide system with robust track roller guide, suitable for the intended uses in deep temperature applications. Can be used without restriction in the deep temperature range between -30 °C and -10 °C. An operating manual is included in the scope of delivery.

Fitting position: As required. Max. length 6.000 mm without joints.
Carriage mounting: By T-slots.
Unit mounting: By T-slots or tapped holes in the bearing block, mounting sets.
Belt type: HTD with steel reinforcement, no backlash when changing direction, repeatability: ± 0,1 mm.

Forces and torques

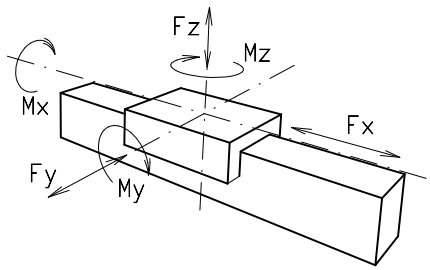

Size	ELZ 60		ELZ 60 S		ELZ 80		ELZ 80 S		ELZ 100	
Forces/Torques	static	dynamic.	static	dynamic	static	dynamic	static	dynamic	static	dynamic
F_x (N)	715	640	715	640	1520	1440	1520	1440	3200	3040
F_y (N)	3000	2000	4100	3100	3000	2000	4600	3600	8000	6500
F_z (N)	1700	1100	2160	1600	1700	1100	3000	1800	3600	2200
M_x (Nm)	67	43	88	65	90	55	170	140	300	230
M_y (Nm)	90	70	190	140	110	80	270	230	400	270
M_z (Nm)	120	100	230	170	150	120	300	220	750	500

All forces and torques relate to the following:

existing values / table values

$$\frac{Fy}{Fy_{dyn}} + \frac{Fz}{Fz_{dyn}} + \frac{Mx}{Mx_{dyn}} + \frac{My}{My_{dyn}} + \frac{Mz}{Mz_{dyn}} \leq 1$$

Geometrical moments

I_x mm^4	6,79x10^5	6,79x10^5	18,99x10^5	18,99x10^5	44,4x10^5
I_y mm^4	6,97x10^5	6,97x10^5	18,97x10^5	18,97x10^5	44,8x10^5
E-Modulus N/mm^2	70000	70000	70000	70000	70000

Speed

(m/s) max	3	5	5	6	8

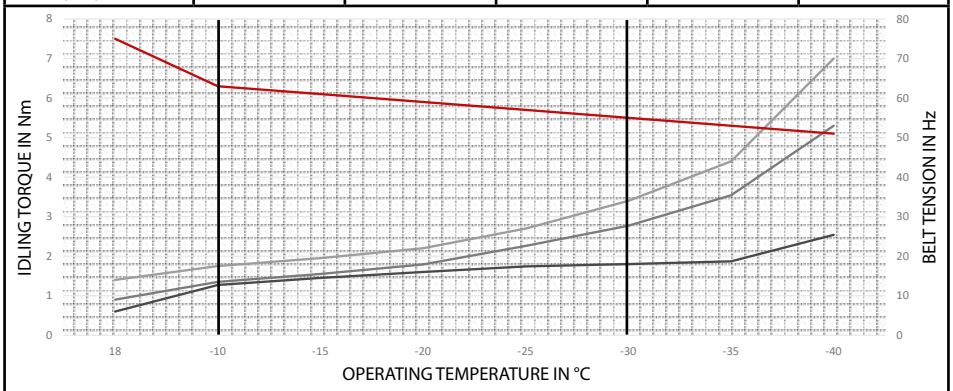

Area of application Nordkap

Temperature-dependent length adjustment per 1000 mm in mm

$\Delta L_{Aluminium}$	ΔT	ΔL_{Steel}	ΔL
0,119	5 K	0,080	0,039
0,238	10 K	0,160	0,078
0,357	15 K	0,240	0,117
0,476	20 K	0,320	0,156
0,595	25 K	0,400	0,195
0,714	30 K	0,480	0,234
0,833	35 K	0,560	0,273
0,952	40 K	0,640	0,312
1,071	45 K	0,720	0,351
1,190	50 K	0,800	0,390
1,309	55 K	0,880	0,429
1,428	60 K	0,960	0,468
1,547	65 K	1,040	0,507
1,666	70 K	1,120	0,546

For life-time calculation of rollers use our homepage.

Driving torque:

$$M_a = \frac{F*P*S_i}{2000*\pi} + M_n$$

$$P_a = \frac{M_a*n}{9550}$$

F = force (N)
P = pulley action perimeter (mm)
Si = safety factor 1,2 … 2
M_n = no-load torque (Nm)
n = rpm pulley (min^{-1})
M_a = driving torque (Nm)
P_a = motor power (KW)

Deflection:

$$f = \frac{F*L^3}{E*I*192}$$

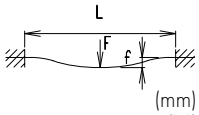

f = deflection (mm)
F = load (N)
L = free length (mm)
E = elastic modulus 70000 (N/mm²)
I = second moment of area (mm⁴)

Linear system **ELZ-NK 60, 60S, 80, 80S, 100**

Dimensions (mm)

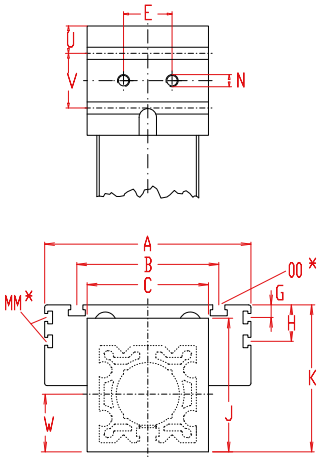

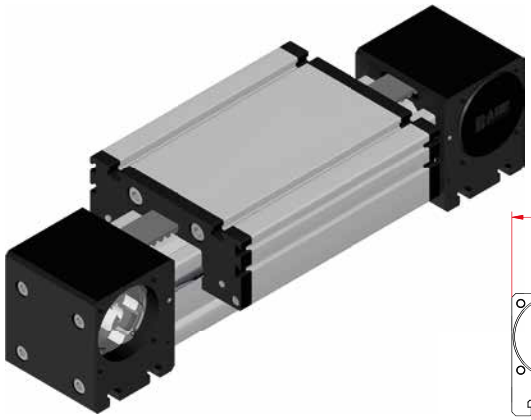

Operating temperature range
-30°C ≤ -10°C
NORDKAP

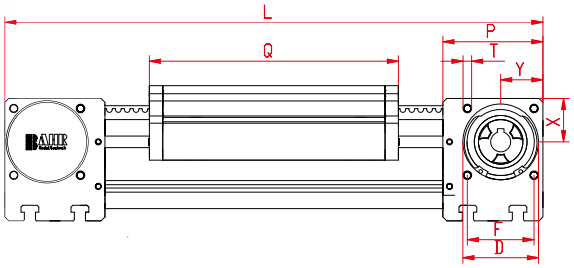

3.1

*For slide nuts refer to chapter 2.2 page 2

Increasing the carriage length will increase the basic length by the same amount.

Size ❒	Basic length L	A	B	C	D - 0,05	E	F	G	H	J	K	MM for	N	OO for	P	Q	T	U	V	W	X	Y	Basic weight	Weight per 100 mm
60	290	144	96	80	47	30	42	-	-	82	90	-	M 8	M 8	59	168	M 6	15	30	41	27	26	4,8 kg	0,62 kg
60 S	315	170	108	80	47	30	42	-	-	82	94	-	M 8	M 8	59	194	M 6	15	30	41	27	26	5,8 kg	0,62 kg
80	375	170	117	100	68	40	60	10,5	30,5	110	121	M 6	M 10	M 10	90	194	M 8	22,5	45	51	39	38	10,0 kg	1,00 kg
80 S	395	190	126	100	68	40	60	12,5	30	110	122	M 6	M 10	M 8	90	214	M 8	22,5	45	51	39	38	11,0 kg	1,00 kg
100	530	230	155	130	90	50	80	-	29	135	154	M 10	M 12	M 10	110	300	M 10	23	64	65	50	50	24,0 kg	1,60 kg

0 **Choice of guide body profile:**
(0) Standard **(2)** corrosion-protected guide rods and screws
(4) expanded corrosion-protected version (depending on the availability of components)

0 **Choice of carriages:**

(0)

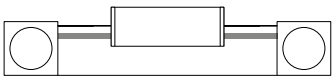

(1)

Size	Version 1	
	Q	L
60	184	306
60S	214	335
80	210	391
80S	234	415
100	316	546

0 **Drive version:**

0

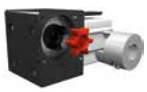

0 1 2 3 4 5 6 7 8 9

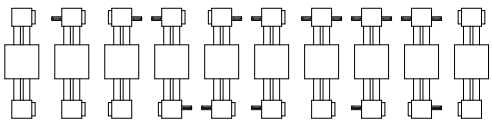

Version 9 is the same as 0,
but with double sided coupling claw.

The standard version is supplied without shaft. A shaft can be retrofitted by inserting it into the pulley bore and securing it with 2 locking rings or tension sets (size 100).

Belt table:

Code No.		Size	Belt	mm/rev.	Number of teeth
0	**4**	**60 (S)**	5M25	130	26
0	**7**	**80 (S)**	8M30	192	24
0	**9**	**100**	8M50	256	32

Shaft dimensions / Coupling claw:

Size	Shaft ø h6 x length	Key	Coupling
60 (S)	14 x 35	5x5x28	14
80 (S)	18 x 45	6x6x40	19
100	22 x 45	6x6x40	24

ELZ-NK	60	1	0	0	0	0	4	1	1500
	Pos.	1	2	3	4	5	6	7	

Basic length + stroke = total length

For combination kits and connecting elements refer to chapter 2.2

Sample ordering code:
ELZ-NK 60, standard body profile, standard carriage, coupling claw on one side, 1210 mm stroke.

Linear system **ELZ 60 (S) W**

BELT DRIVE

- HIGHER PROFILE STABILITY
- HIGHER FORCE FIXTURE
- LONG TRAVERSE PATH

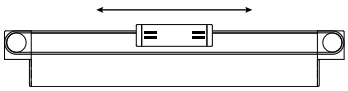

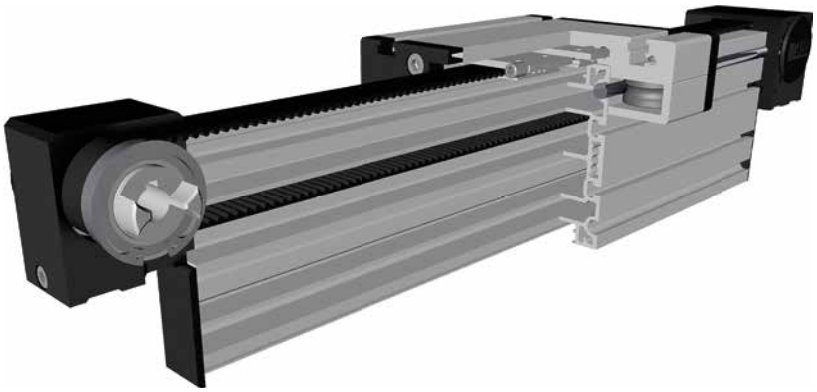

Function:
The guide body consists of an aluminium square profile with lateral, parallel, form-fit, internal hardened steel rods. The guide carriage, which is driven along the shafts by a timing belt, moves on the guide body with internal linear ball bearings that are adjustable free of play. Due to the rectangular profile high torques and loads can be taken up. In addition, a very high stability and low deflection are ensured for long axis systems. The belt tension can be easily readjusted via a tensioning device within the carriage. This device also helps to adjust the symmetry of the carriages in applications where two parallel linear units are used.

Fitting position: As required. Max. length 3.000 mm without joints.
Carriage mounting: By T-slots.
Unit mounting: By T-slots or tapped holes in the bearing block, mounting sets.
Belt type: HTD with steel reinforcement, no backlash when changing direction, repeatability: ± 0,1 mm.

Forces and torques

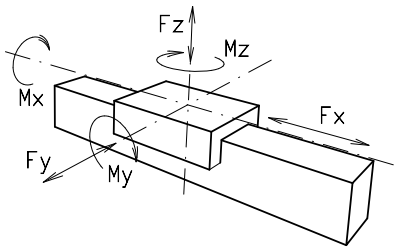

Size	60		60 S	
Forces/Torques	static	dynamic	static	dynamic
F_x (N)	894	800	894	800
F_y (N)	3000	2000	4100	3100
F_z (N)	1700	1100	2160	1600
M_x (Nm)	67	43	88	65
M_y (Nm)	90	70	190	140
M_z (Nm)	120	100	230	170
All forces and torques relate to the following:				
existing values / table values	$\frac{Fy}{Fy_{dyn}} + \frac{Fz}{Fz_{dyn}} + \frac{Mx}{Mx_{dyn}} + \frac{My}{My_{dyn}} + \frac{Mz}{Mz_{dyn}} \leq 1$			
No-load torque				
Nm	0,6		0,7	
Speed				
(m/s) max	5		7	
Tensile force				
permanent (N)	900		900	
0,2 s (N)	1000		1000	
Geometrical moments of inertia of aluminium profile				
I_x mm⁴	$2{,}8 \times 10^6$		$2{,}8 \times 10^6$	
I_y mm⁴	$9{,}6 \times 10^5$		$9{,}6 \times 10^5$	
E-Modulus N/mm²	70000		70000	

For life-time calculation of rollers use our homepage.

Driving torque:

$$M_a = \frac{F * P * S_i}{2000 * \pi} + M_n$$

$$P_a = \frac{M_a * n}{9550}$$

F	= force	(N)
P	= pulley action perimeter	(mm)
Si	= safety factor 1,2 … 2	
M_n	= no-load torque	(Nm)
n	= rpm pulley	(min^{-1})
M_a	= driving torque	(Nm)
P_a	= motor power	(KW)

Deflection:

$$f = \frac{F * L^3}{E * I * 192}$$

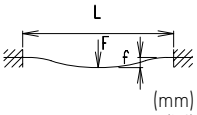

f	= deflection	(mm)
F	= load	(N)
L	= free length	(mm)
E	= elastic modulus 70000	(N/mm²)
I	= second moment of area	(mm⁴)

Linear system **ELZ 60 (S) W**

Dimensions (mm)

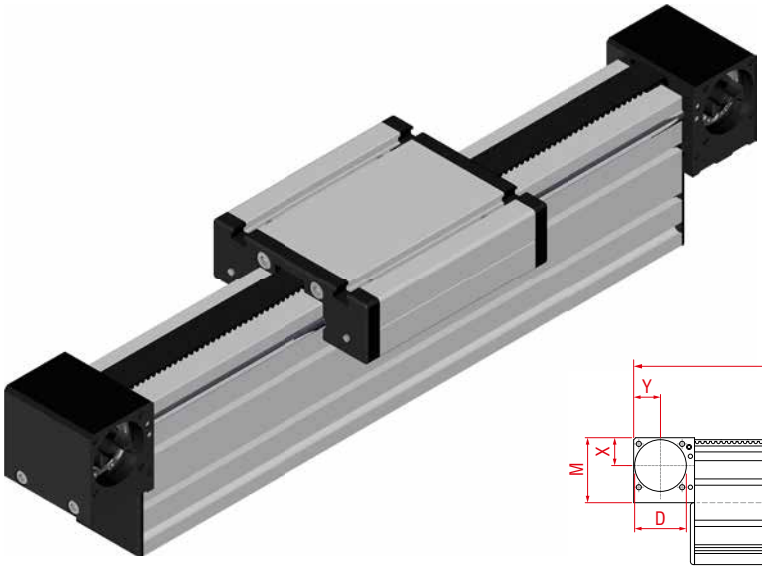

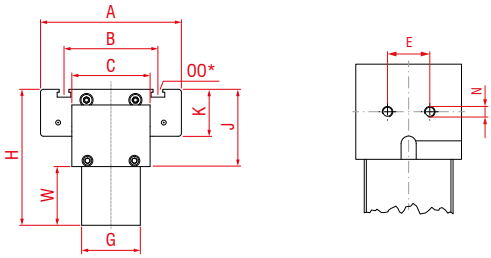

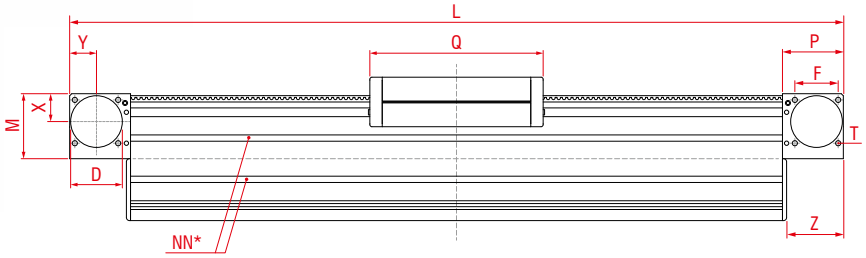

*For slide nuts refer to chapter 2.2 page 2

Increasing the carriage length will increase the basic length by the same amount.

Size	Basic length L	A	B	C	D - 0,05	E	F	G	H	J	K	M	N	NN for	OO for	P	Q	T	W	X	Y	Z	Basic weight	Weight per 100 mm
ELZ 60 **W**	290	144	96	80	47	30	42	60	139	79	48	71	M8	M5	M8	59	168	M6	60	27	26	55	5,4 kg	0,8 kg
ELZ 60S **W**	315	170	108	80	47	30	42	60	143	83	52	71	M8	M5	M8	59	194	M6	60	27	26	55	6,4 kg	0,8 kg

0 **Choice of guide body profile:**
(0) Standard **(2)** corrosion-protected guide rods and screws
(4) expanded corrosion-protected version (depending on the availability of components)

0 **Choice of carriages:**

(0)

(1)

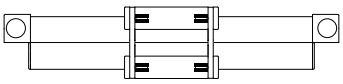

Size	Version 1	
	Q	L
60	184	306
60 S	214	335

0 **Drive version:**

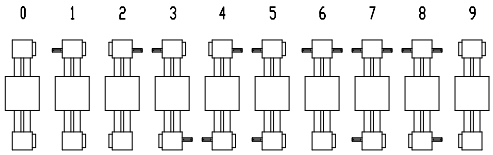

Version 9 is the same as 0,
but with double sided coupling claw.

Belt table:

Code No.		Size	Belt	mm/rev.	Number of teeth
0	4	**60 (S)**	5M25	130	26

Shaft dimensions / Coupling claw:

Size	Shaft ø h6 x length	Key	Coupling
60 (S)	14 x 35	5x5x28	14

ELZ	60 W	1	0	0	0	0	4	1	1500
	Pos.	1	2	3	4	5	6	7	

Basic length + stroke = total length

For combination kits and connecting elements refer to chapter 2.2

Sample ordering code:
ELZ 60 W, standard body profile, standard carriage, coupling claw on one side, 1210 mm stroke

Linear system **ELZZ 60, 60S, 80, 80S, 100, 125**

BELT DRIVE - TWO SEPARATELY DRIVEN CARRIAGES

- UNIVERSAL SYSTEM
- INDEPENDENT CARRIAGES
- HIGHER FORCE FIXTURE
- COMPACT DESIGN

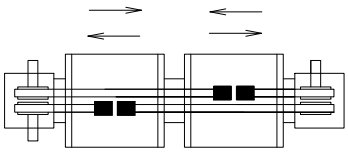

Function:
This linear unit consists of an aluminium square profile with integrated, hardened steel guide rods. Each carriage can be moved separately by its own drive. This unit has twin pulleys, which run on separate bearings, and two independent, parallel drive belts, one for each carriage.

Fitting position: As required. Max. length 4.000 mm without joints.
Carriage mounting: By T-slots.
Unit mounting: By T-slots or tapped holes in the bearing block, mounting sets.
Belt type: HTD with steel reinforcement, no backlash when changing direction, repeatability ± 0,1 mm.

Forces and torques

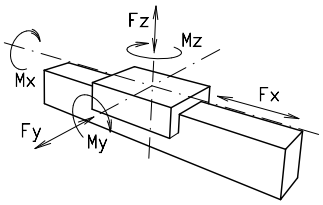

Size	ELZZ 60		ELZZ 60 S		ELZZ 80		ELZZ 80 S		ELZZ 100		ELZZ 125	
Forces/Torques	static	dynamic	static	dynamic	static	dynamic	static	dynamic	static	dynamic	static	dynamic
F_x (N)	298	250	298	250	679	500	679	500	1210	1100	1900	1800
F_y (N)	3000	2000	4100	3100	3000	2000	4600	3600	8000	6500	12000	9000
F_z (N)	1700	1100	2160	1600	1700	1100	3000	2600	3600	2200	6000	4500
M_x (Nm)	67	43	88	65	90	55	170	140	300	230	600	450
M_y (Nm)	90	70	190	140	110	80	270	230	400	270	750	600
M_z (Nm)	120	100	230	170	150	120	300	220	750	500	1350	1150

All forces and torques relate to the following:

existing values / table values: $\frac{Fy}{Fy_{dyn}} + \frac{Fz}{Fz_{dyn}} + \frac{Mx}{Mx_{dyn}} + \frac{My}{My_{dyn}} + \frac{Mz}{Mz_{dyn}} \leq 1$

No-load torque						
Nm	0,6	0,7	0,9	1,2	1,4	1,8
Speed						
(m/s) max	5	5	6	8	10	10
Tensile force						
permanent (N)	298	298	679	679	1210	1900
0,2 s (N)	333	333	746	746	1331	2090
Geometrical moments of inertia of aluminium profile						
I_x mm^4	6,79x10^5	6,79x10^5	18,99x10^5	18,99x10^5	44,4x10^5	101,5x10^5
I_y mm^4	6,97x10^5	6,97x10^5	18,97x10^5	18,97x10^5	44,8x10^5	101,5x10^5
E-Modulus N/mm^2	70000	70000	70000	70000	70000	70000

For life-time calculation of rollers use our homepage.

Driving torque:

$$M_a = \frac{F*P*S_i}{2000*\pi} + M_n$$

$$P_a = \frac{M_a*n}{9550}$$

F = force (N)
P = pulley action perimeter (mm)
Si = safety factor 1,2 … 2
M_n = no-load torque (Nm)
n = rpm pulley (min^{-1})
M_a = driving torque (Nm)
P_a = motor power (KW)

Deflection:

$$f = \frac{F*L^3}{E*I*192}$$

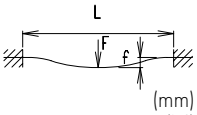

f = deflection (mm)
F = load (N)
L = free length (mm)
E = elastic modulus 70000 (N/mm^2)
I = second moment of area (mm^4)

Linear system **ELZZ 60, 60S, 80, 80S, 100, 125**

Dimensions (mm)

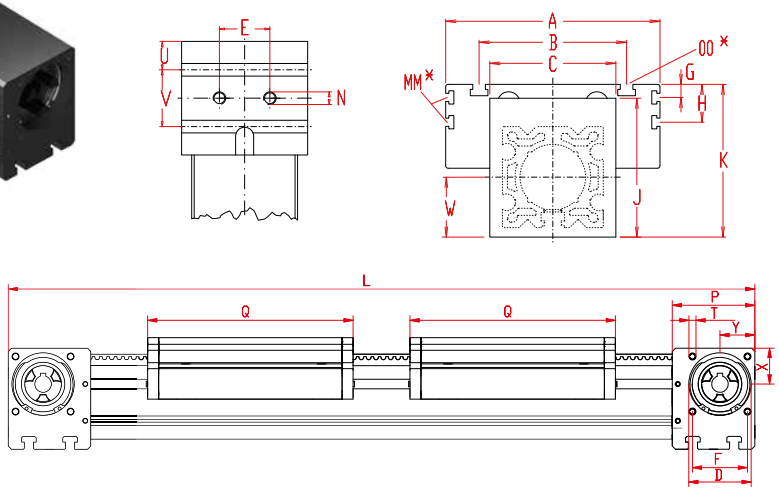

*For slide nuts refer to chapter 2.2 page 2

Increasing the carriage length will increase the basic length by the same amount.

Size ❒	Basic length L	A	B	C	D - 0,05	E	F	G	H	J	K	MM for	N	OO for	P	Q	T	U	V	W	X	Y	Basic weight	Weight per 100 mm
ELZZ 60	460	144	96	80	47	30	42	-	-	82	90	-	M 8	M 8	59	168	M 6	15	30	41	27	26	7,4 kg	0,62 kg
ELZZ 60S	510	170	108	80	47	30	42	-	-	82	94	-	M 8	M 8	59	194	M 6	15	30	41	27	26	9,4 kg	0,62 kg
ELZZ 80	570	170	117	100	68	40	60	10,5	30,5	110	121	M 6	M 10	M 10	90	194	M 8	22,5	45	51	39	38	12,8 kg	1,00 kg
ELZZ 80S	610	190	126	100	68	40	60	12,5	30	110	122	M 6	M 10	M 8	90	214	M 8	22,5	45	51	39	38	14,8 kg	1,00 kg
ELZZ 100	830	230	155	130	90	50	80	-	29	135	154	M 10	M 12	M 10	110	300	M 10	23	64	65	50	50	33,0 kg	1,60 kg
ELZZ 125	990	295	200	160	110	60	100	-	30	167	191	M 10	M 12	M 12	130	365	M 10	38	50	82	60	60	52,0 kg	2,10 kg

0 **Choice of guide body profile:**
(0) Standard **(2)** corrosion-protected guide rods and screws

0 **Choice of carriages:**

(0)

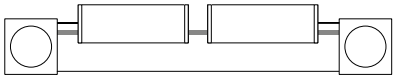

(1)

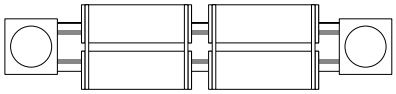

Size	Version 1	
	Q	L
60	184	492
60S	214	550
80	210	602
80S	234	650
100	316	862
125	389	1038

0 **Drive version:**

The standard version is supplied without shaft.

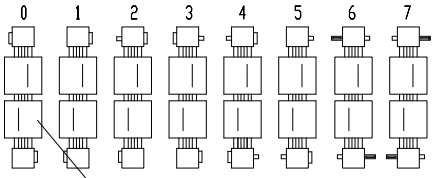

connected with the left belt

Coupling claw on one side

Standard-shaft[1]

Shaft one size smaller[2]

Belt table:

Code No.		Size	Belt	mm/rev.	Number of teeth
0	**2**	**60 (S)**	5M09	130	26
0	**5**	**80 (S)**	8M12	192	24
0	**6**	**100**	8M20	256	32
0	**7**	**125**	8M30	304	38

Shaft dimensions / Coupling claw:

Size	Shaft ø h6 x length	Key	Coupling
60 (S)[1]	14 x 35	5x5x30	14
60 (S)[2]	10 x 27	3x3x25	14
80 (S)[1]	18 x 45	6x6x40	19
80 (S)[2]	14 x 35	5x5x28	19
100[1]	22 x 45	6x6x40	24
100[2]	18 x 45	6x6x40	24
125[1]	30 x 55	8x7x50	28
125[2]	22 x 45	6x6x40	28

ELZZ	60	4	0	0	0	0	2	1	1500
	Pos.	1	2	3	4	5	6	7	

Basic length + stroke = total length

For combination kits and connecting elements refer to chapter 2.2

Sample ordering code:
ELZZ 60 with standard body profile, standard carriage and coupling claw on one side, 1040 mm stroke

Linear system **ELZD 60 (S) W**

BELT DRIVE WITH TWO SEPARATELY DRIVEN CARRIAGES

- HIGHER PROFILE STABILITY
- INDEPENDENT CARRIAGES
- HIGHER FORCE FIXTURE

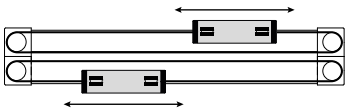

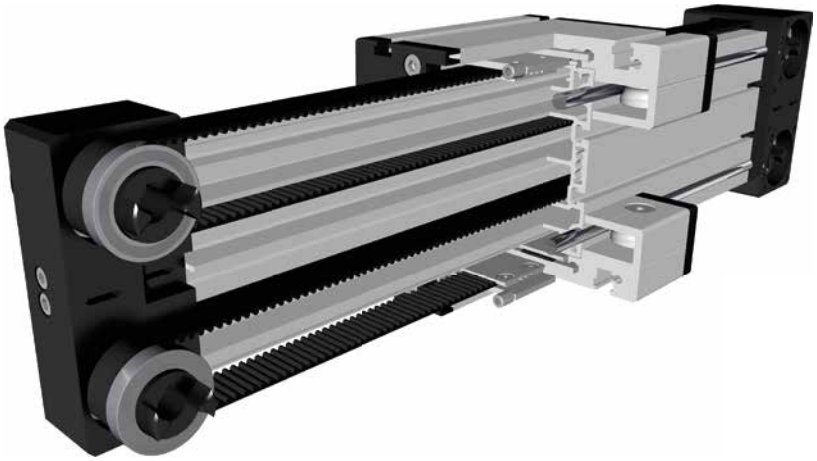

Function:
The guide body consists of an aluminium square profile with lateral, parallel, form-fit, internal hardened steel rods. Two carriages, which are driven individually by a timing belt, move along the guide body independently of one another. Due to the rectangular profile high torques and loads can be taken up. In addition, a very high stability and low deflection are ensured for long axis systems. The belt tension can be easily readjusted via a tensioning device within the carriage. This device also helps to adjust the symmetry of the carriages in applications where two parallel linear units are used.

Fitting position: As required. Max. length 3.000 mm without joints.
Carriage mounting: By T-slots.
Unit mounting: By T-slots or mounting sets.
Belt type: HTD with steel reinforcement, no backlash when changing direction, repeatability: ± 0,1 mm.

Forces and torques

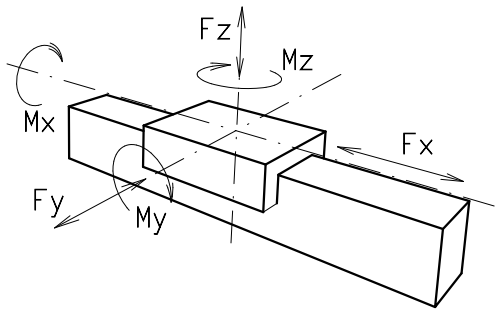

Size	60		60 S	
Forces/Torques	static	dynamic	static	dynamic
F_x (N)	894	800	894	800
F_y (N)	3000	2000	4100	3100
F_z (N)	1700	1100	2160	1600
M_x (Nm)	67	43	88	65
M_y (Nm)	90	70	190	140
M_z (Nm)	120	100	230	170
All forces and torques relate to the following: existing values / table values $\frac{Fy}{Fy_{dyn}} + \frac{Fz}{Fz_{dyn}} + \frac{Mx}{Mx_{dyn}} + \frac{My}{My_{dyn}} + \frac{Mz}{Mz_{dyn}} \leq 1$				
No-load torque				
Nm	0,6		0,7	
Speed				
(m/s) max	5		7	
Tensile force				
permanent (N)	900		900	
0,2 s (N)	1000		1000	
Geometrical moments of inertia of aluminium profile				
I_x mm^4	2,8 x 10^6		2,8 x 10^6	
I_y mm^4	9,6 x 10^5		9,6 x 10^5	
E-Modulus N/mm^2	70000		70000	

For life-time calculation of rollers use our homepage.

Driving torque:

$$M_a = \frac{F * P * S_i}{2000 * \pi} + M_n$$

$$P_a = \frac{M_a * n}{9550}$$

F	= force	(N)
P	= pulley action perimeter	(mm)
Si	= safety factor 1,2 … 2	
M_n	= no-load torque	(Nm)
n	= rpm pulley	(min^{-1})
M_a	= driving torque	(Nm)
P_a	= motor power	(KW)

Deflection:

$$f = \frac{F * L^3}{E * I * 192}$$

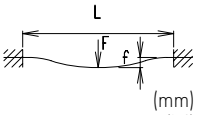

f	= deflection	(mm)
F	= load	(N)
L	= free length	(mm)
E	= elastic modulus 70000	(N/mm^2)
I	= second moment of area	(mm^4)

Linear system **ELZD 60 (S) W**

Dimensions (mm)

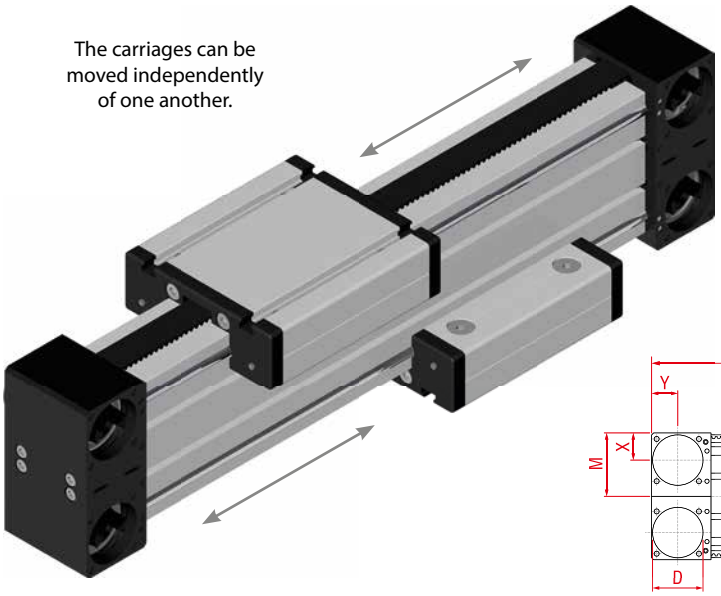

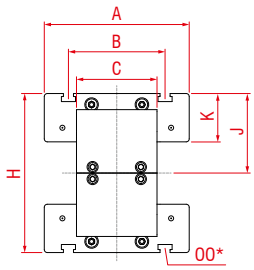

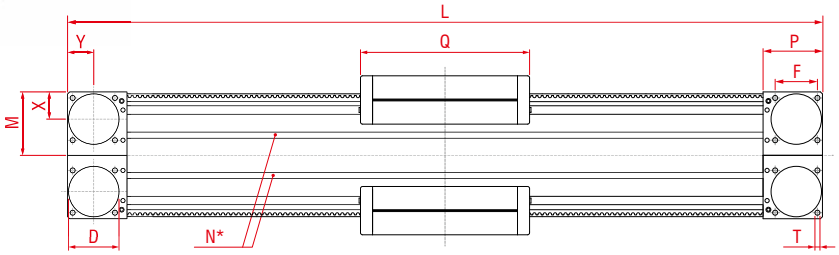

*For slide nuts refer to chapter 2.2 page 2

Increasing the carriage length will increase the basic length by the same amount.

Size	Basic length L	A	B	C	D - 0,05	F	H	J	K	M	N for	OO for	P	Q	T	X	Y	Basic weight	Weight per 100 mm
ELZD 60 **W**	290	144	96	80	47	42	158	79	48	71	M5	M8	59	168	M6	27	26	9,6 kg	1,0 kg
ELZD 60S **W**	315	170	108	80	47	42	166	83	52	71	M5	M8	59	194	M6	27	26	11,6 kg	1,0 kg

0 **Choice of guide body profile:**
(0) Standard **(2)** corrosion-protected guide rods and screws
(4) expanded corrosion-protected version (depending on the availability of components)

0 **Choice of carriages:**

(0)

0 **Drive version:**

(0)

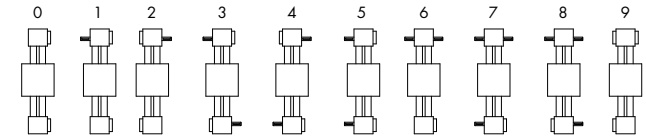

Top drive version:
Version 9 is the same as 0, but with double sided coupling claw.

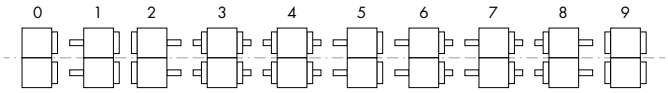

Mirror plane
Drive version
(top and bottom identical)

(0)

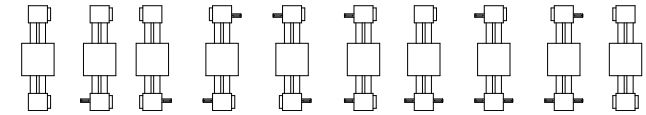

Bottom drive version:
Version 9 is the same as 0, but with double sided coupling claw.

Belt table:

Code No.		Size	Belt	mm/rev.	Number of teeth
0	4	**60 (S)**	5M25	130	26

Shaft dimensions / Coupling claw:

Size	Shaft ø h6 x length	Key	Coupling
60 (S)	14 x 35	5x5x28	14

ELZD	**60 W**	**1**	**0**	**0**	**0**	**0**	**4**	**1**	**1500**
	Pos.	1	2	3	4	5	6	7	

Basic length + stroke = total length

For combination kits and connecting elements refer to chapter 2.2

Sample ordering code:
ELZD 60 W, standard body profile, standard carriage, coupling claw on one side, 1210 mm stroke

Linear system **ELSZ 30, 40, 60, 60S, 80, 80S, 100, 125**

WITH STANDARD BELT

Ω OMEGA SYSTEM

VERTICAL INSTALLATION POSITION

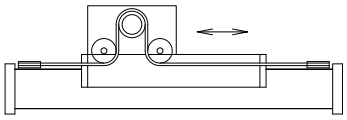

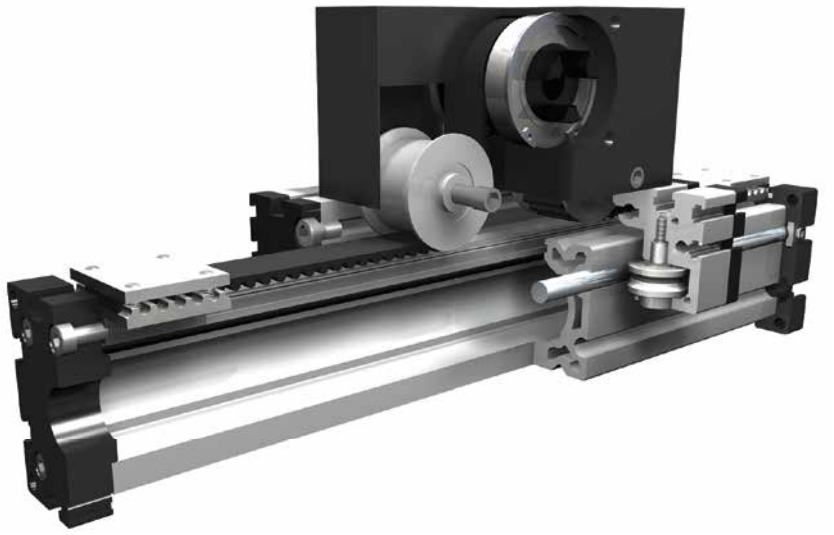

Function:
This linear unit consists of an aluminium square profile with hardened steel guide rods. The carriage, which has internal linear ball bearings that can be adjusted free of play, is driven along the guide rods by a timing belt. The pulley has maintenance-free ball bearings. Belt tension can be readjusted by a simple tensioning device in one of the end blocks. This device can also be used for symmetrical adjustment of two or more linear units running parallel.

Forces and torques

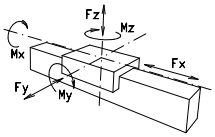

Fitting position: As required. Max. length without joints 6.000 mm.
Carriage mounting: By T-slots.
Unit mounting: By T-slots or tapped holes in the bearing blocks, or mounting sets.
Belt type: HTD with steel reinforcement, no backlash when changing direction, repeatability ± 0,1 mm.

Size	ELSZ 30		ELSZ 40		ELSZ 60		ELSZ 60 S		ELSZ 80		ELSZ 80 S		ELSZ 100		ELSZ 125	
Forces/Torques	static	dynam.	static	dynam.	static	dynam.	static	dynam.	static	dynam.	static	dynam.	static	dynam.	static	dynam.
F_x (N)	200	180	390	350	894	800	894	800	1900	1800	1900	1800	4000	3800	5900	5750
F_y (N)	90	60	1200	700	3000	2000	4100	3100	3000	2000	4600	3600	8000	6500	12000	9000
F_z (N)	90	60	900	650	1700	1100	2160	1600	1700	1100	3000	1800	3600	2200	6000	4500
M_x (Nm)	10	5	25	20	67	43	88	65	90	55	170	140	300	230	600	450
M_y (Nm)	13	6	32	18	90	70	190	140	110	80	270	230	400	270	750	600
M_z (Nm)	14	7	35	25	120	100	230	170	150	120	300	220	750	500	1350	1150

All forces and torques relate to the following:

existing values / table values: $\frac{Fy}{Fy_{dyn}} + \frac{Fz}{Fz_{dyn}} + \frac{Mx}{Mx_{dyn}} + \frac{My}{My_{dyn}} + \frac{Mz}{Mz_{dyn}} \leq 1$

No-load torque								
Nm	0,2	0,7	0,9	0,9	1,1	1,2	1,5	1,8
Speed								
(m/s) max	2	4	5	7	6	8	8	10
Tensile force								
permanent (N)	200	390	900	900	1900	1900	4000	5900
0,2 s (N)	280	480	1000	1000	2090	2090	4300	6350
Geometrical moments of inertia of aluminium profile								
I_x mm^4	$4{,}09 \times 10^4$	$1{,}32 \times 10^5$	$6{,}79 \times 10^5$	$6{,}79 \times 10^5$	$18{,}99 \times 10^5$	$18{,}99 \times 10^5$	$44{,}4 \times 10^5$	$101{,}5 \times 10^5$
I_y mm^4	$4{,}00 \times 10^4$	$1{,}34 \times 10^5$	$6{,}97 \times 10^5$	$6{,}97 \times 10^5$	$18{,}97 \times 10^5$	$18{,}97 \times 10^5$	$44{,}8 \times 10^5$	$101{,}5 \times 10^5$
E-Modulus N/mm^2	70000	70000	70000	70000	70000	70000	70000	70000

For life-time calculation of rollers use our homepage.

Driving torque:

$$M_a = \frac{F * P * S_i}{2000 * \pi} + M_n$$

$$P_a = \frac{M_a * n}{9550}$$

F = force (N)
P = pulley action perimeter (mm)
Si = safety factor 1,2 … 2
M_n = no-load torque (Nm)
n = rpm pulley (min^{-1})
M_a = driving torque (Nm)
P_a = motor power (KW)

Deflection:

$$f = \frac{F * L^3}{E * I * 192}$$

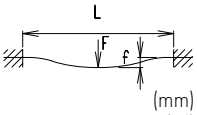

f = deflection (mm)
F = load (N)
L = free length (mm)
E = elastic modulus 70000 (N/mm²)
I = second moment of area (mm⁴)

Linear system **ELSZ 30, 40, 60, 60S, 80, 80S, 100, 125**

Dimensions (mm)

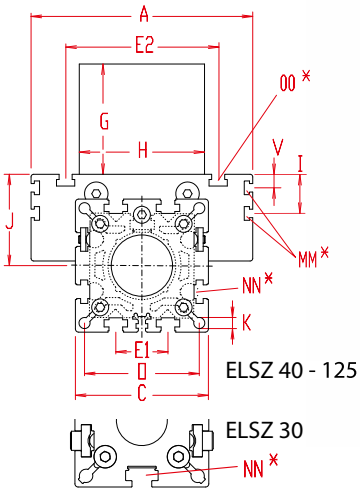

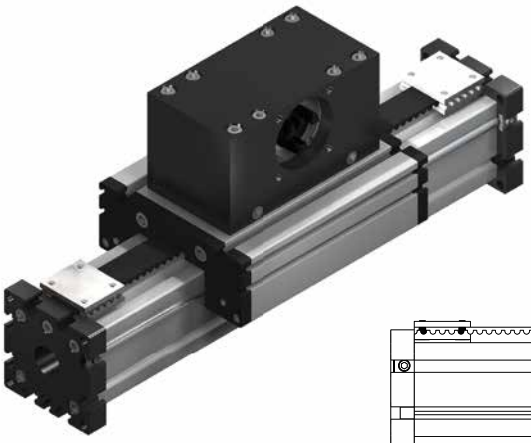

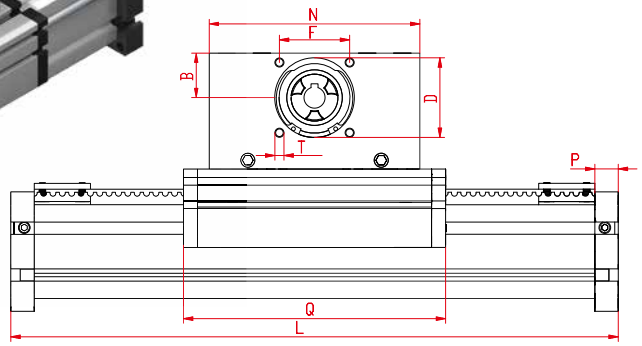

*For slide nuts refer to chapter 2.2 page 2

Increasing the carriage length will increase the basic length by the same amount.

Size ❒	Basic length L	A	B	C	D - 0,05	E1	E2	F	G	H	I	J	K	MM for	N	NN for	O	OO for	P	Q	T	V	Basic weight	Weight per 100 mm
ELSZ 30	182	70	16	42	28	-	56	25	45	42	-	26	4,2	-	90	M 6	35	M 6	12	108	M 4	-	1,33 kg	0,16 kg
ELSZ 40	230	100	20	58	37	25	66	32	65	60	-	35	6,5	-	110	M 6	47	M 6	12	142	M 5	-	2,1 kg	0,24 kg
ELSZ 60	280	144	30	82	47	30	96	42	80	80	-	49	8,5	-	130	M 8	69	M 8	16	168	M 6	-	5,1 kg	0,62 kg
ELSZ 60S	305	170	30	82	47	30	108	42	80	80	-	53	8,5	-	130	M 8	69	M 8	16	194	M 6	-	6,1 kg	0,62 kg
ELSZ 80	365	170	38	102	68	40	117	60	99	100	30,5	70	8,5	M 6	180	M 10	88	M 10	20	214	M 8	10,5	11,0 kg	1,00 kg
ELSZ 80S	365	190	38	102	68	40	126	60	99	100	30	71	8,5	M 6	180	M 8	88	M 8	20	214	M 8	12,5	12,0 Kg	1,00 Kg
ELSZ 100	535	230	60	130	90	50	155	80	130	130	29	89	10,5	M10	270	M 12	112	M 10	30	310	M 10	-	25,8 kg	1,60 kg
ELSZ 125	595	295	62	165	110	60	200	100	139	160	30	107,5	M10	M10	310	M 12	140	M 12	30	365	M 10	-	54,5 kg	1,94 kg

0 **Choice of guide body profile:**
(0) Standard **(2)** corrosion-protected guide rods and screws
(4) expanded corrosion-protected version (depending on the availability of components)

0 **Choice of carriages:**

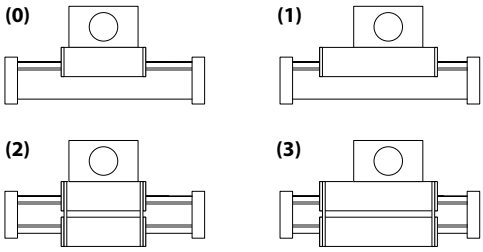

Size	Version 1		Version 2		Version 3	
	Q	L	Q	L	Q	L
30	175	245	124	194	197	267
40	237	325	158	246	253	341
60	303	415	184	296	319	431
60S	329	431	214	325	349	451
80	379	525	230	381	395	541
80S	399	545	234	395	419	565
100	535	760	326	551	551	776
125	640	870	389	619	664	894

0 **Drive version:**

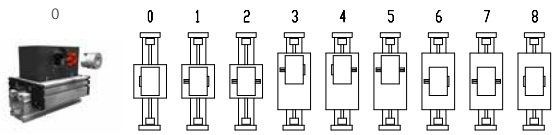

Version 8 is the same as 0, but with double sided coupling claw.

The standard version is supplied without shaft. A shaft can be retrofitted by inserting it into the pulley bore and securing it with 2 locking rings or tension sets (size 100 + 125).

Belt table:

Code No.		Size	Belt	mm/rev.	Number of teeth
0	**1**	**30**	3M12	75	25
0	**3**	**40**	5M15	100	20
0	**4**	**60 (S)**	5M25	130	26
0	**7**	**80 (S)**	8M30	192	24
0	**9**	**100**	8M50	256	32
1	**0**	**125**	8M70	304	38

Shaft dimensions / Coupling claw:

Size	Shaft ø h6 x length	Key	Coupling
30	6 x 15	2x2x12	7
40	10 x 27	3x3x25	9
60 (S)	14 x 35	5x5x28	14
80 (S)	18 x 45	6x6x40	19
100	22 x 45	6x6x40	24
125	30 x 55	8x7x50	28

ELSZ	60	0	0	0	0	0	4	1	1500
	Pos.	1	2	3	4	5	6	7	

Basic length + stroke = total length

For combination kits and connecting elements refer to chapter 2.2

Sample ordering code:
ELSZ 60 with standard body profile, standard carriage and coupling claw on one side, 1220 mm stroke.

Linear system **ELSZ 30, 40, 60, 60S, 80, 80S, 100, 125**

WITH WIDENED BELT DRIVE

- OMEGA SYSTEM
- VERTICAL INSTALLATION POSITION
- BELT WIDENING
- HIGHER FORCE FIXTURE

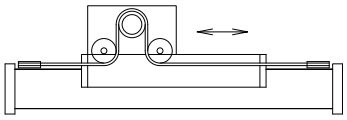

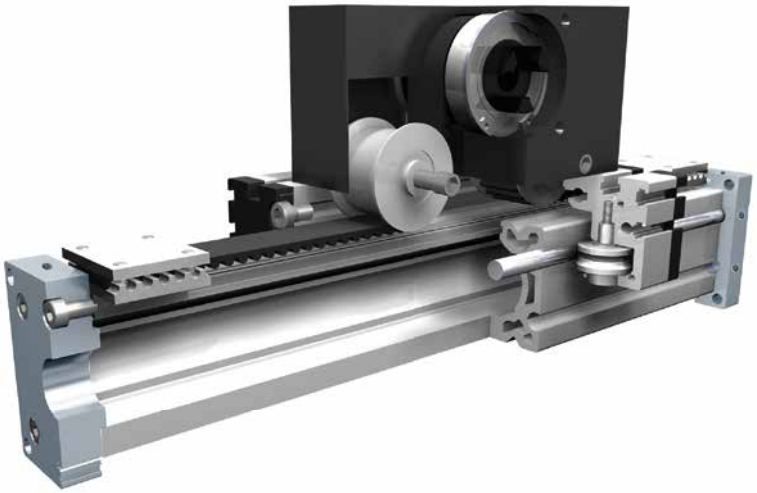

Function:
This linear unit consists of an aluminium square profile with hardened steel guide rods. The carriage, which has internal linear ball bearings that can be adjusted free of play, is driven along the guide rods by a timing belt. The pulley has maintenance-free ball bearings. Belt tension can be readjusted by a simple tensioning device in one of the end blocks. This device can also be used for symmetrical adjustment of two or more linear units running parallel.

Forces and torques

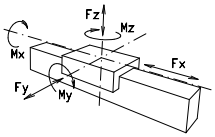

Fitting position: As required. Max. length without joints 6.000 mm.
Carriage mounting: By T-slots.
Unit mounting: By T-slots, threads or tapped holes in the bearing blocks, or mounting sets.
Belt type: HTD with steel reinforcement, no backlash when changing direction, repeatability ± 0,1 mm.

Size	ELSZ 30		ELSZ 40		ELSZ 60		ELSZ 60 S		ELSZ 80		ELSZ 80 S		ELSZ 100		ELSZ 125	
Forces/Torques	static	dynam.	static	dynam.	static	dynam.	static	dynam.	static	dynam.	static	dynam.	static	dynam.	static	dynam.
F_x (N)	390	350	894	800	1900	1800	1900	1800	4000	3800	4000	3800	5900	5750	7900	7500
F_y (N)	90	60	1200	700	3000	2000	4100	3100	3000	2000	4600	3600	8000	6500	12000	9000
F_z (N)	90	60	900	650	1700	1100	2160	1600	1700	1100	3000	1800	3600	2200	6000	4500
M_x (Nm)	10	5	25	20	67	43	88	65	90	55	170	140	300	230	600	450
M_y (Nm)	13	6	32	18	90	70	190	140	110	80	270	230	400	270	750	600
M_z (Nm)	14	7	35	25	120	100	230	170	150	120	300	220	750	500	1350	1150

All forces and torques relate to the following:

existing values / table values

$$\frac{Fy}{Fy_{dyn}} + \frac{Fz}{Fz_{dyn}} + \frac{Mx}{Mx_{dyn}} + \frac{My}{My_{dyn}} + \frac{Mz}{Mz_{dyn}} \leq 1$$

No-load torque								
Nm	0,5	0,7	0,9	0,9	1,2	1,2	1,5	1,8
Speed								
(m/s) max	2	4	5	7	8	8	8	8
Tensile force								
permanent (N)	390	894	1 900	1900	4000	4000	5900	7900
0,2 s (N)	480	480	2090	2090	4300	4300	6350	8500
Geometrical moments of inertia of aluminium profile								
I_x mm^4	$4{,}09 \times 10^4$	$1{,}32 \times 10^5$	$6{,}79 \times 10^5$	$6{,}79 \times 10^5$	$18{,}99 \times 10^5$	$18{,}99 \times 10^5$	$44{,}4 \times 10^5$	$101{,}5 \times 10^5$
I_y mm^4	$4{,}00 \times 10^4$	$1{,}34 \times 10^5$	$6{,}97 \times 10^5$	$6{,}97 \times 10^5$	$18{,}97 \times 10^5$	$18{,}97 \times 10^5$	$44{,}8 \times 10^5$	$101{,}5 \times 10^5$
E-Modulus N/mm^2	70000	70000	70000	70000	70000	70000	70000	70000

For life-time calculation of rollers use our homepage.

Driving torque:

$$M_a = \frac{F * P * S_i}{2000 * \pi} + M_n$$

$$P_a = \frac{M_a * n}{9550}$$

F	= force	(N)
P	= pulley action perimeter	(mm)
Si	= safety factor 1,2 … 2	
M_n	= no-load torque	(Nm)
n	= rpm pulley	(min^{-1})
M_a	= driving torque	(Nm)
P_a	= motor power	(KW)

Deflection:

$$f = \frac{F * L^3}{E * I * 192}$$

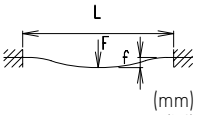

f	= deflection	(mm)
F	= load	(N)
L	= free length	(mm)
E	= elastic modulus 70000	(N/mm^2)
I	= second moment of area	(mm^4)

Linear system **ELSZ 30, 40, 60, 60S, 80, 80S, 100, 125**

Dimensions (mm)

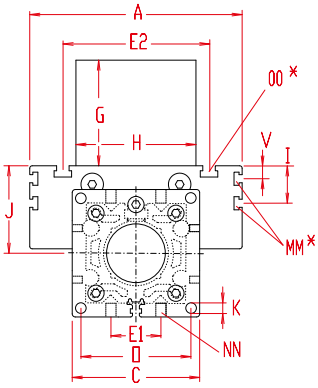

ELSZ 40 - 100

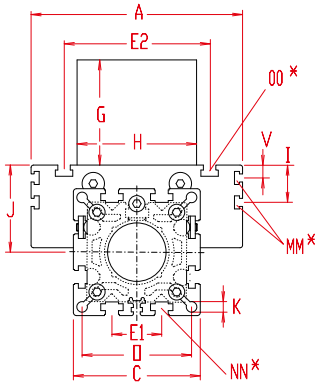

ELSZ 30, 125

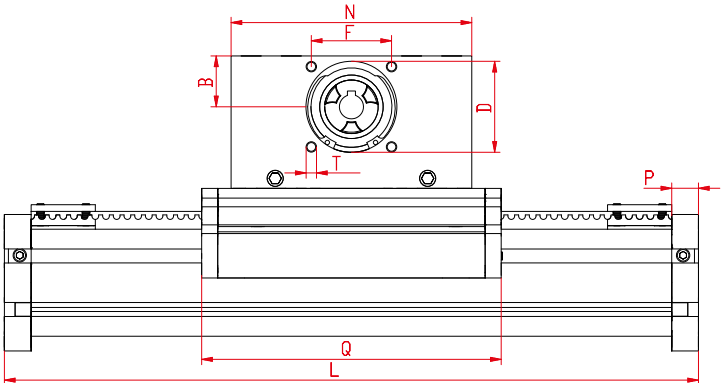

*For slide nuts refer to chapter 2.2 page 2

Increasing the carriage length will increase the basic length by the same amount.

Size ❒	Basic length L	A	B	C	D - 0,05	E1	E2	F	G	H	I	J	K	MM for	N	NN for	O	OO for	P	Q	T	V	Basic weight	Weight per 100 mm
ELSZ 30	210	70	20	42	37	-	56	32	55	60	-	26	4,2	-	110	M 6	35	M 6	12	128	M 5	-	1,5 kg	0,16 kg
ELSZ 40	260	100	30	58	47	18	66	42	83	80	-	35	6,5	-	130	M 6	47	M 6	12	164	M 6	-	2,7 kg	0,24 kg
ELSZ 60	355	144	38	82	68	30	96	60	104	100	-	49	8,5	-	180	M 8	69	M 8	16	214	M 8	-	6,3 kg	0,62 kg
ELSZ 60S	355	170	38	82	68	30	108	60	102	100	-	53	8,5	-	180	M 8	69	M 8	16	214	M 8	-	7,3 kg	0,62 kg
ELSZ 80	460	170	60	102	90	40	117	80	140	130	30,5	70	8,5	M 6	270	M 10	88	M 10	20	304	M 10	10,5	14,0 kg	1,00 kg
ELSZ 80S	460	190	60	102	90	40	126	80	138,4	130	30	71	8,5	M 6	270	M 10	88	M 8	20	304	M 10	12,5	15,0 Kg	1,00 Kg
ELSZ 100	575	230	62	130	110	50	155	100	143	160	29	89	M12	M10	310	M 10	112	M 10	30	350	M 10	-	31,0 kg	1,60 kg
ELSZ 125	605	295	62	165	110	60	200	100	139	180	30	107,5	M12	M10	310	M 12	140	M 12	30	365	M 10	-	57,4 kg	1,96 kg

0 **Choice of guide body profile:**
(0) Standard **(2)** corrosion-protected guide rods and screws
(4) expanded corrosion-protected version (depending on the availability of components)

0 **Choice of carriages:**

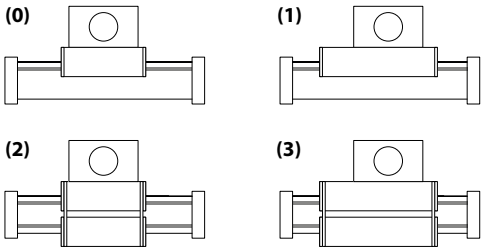

Size	Version 1		Version 2		Version 3	
	Q	L	Q	L	Q	L
30	195	279	140	222	207	291
40	257	355	180	276	273	371
60	353	494	230	371	369	510
60S	379	520	234	375	399	540
80	469	625	320	476	485	641
80S	489	645	324	480	509	665
100	575	800	366	591	591	816
125	640	870	389	619	664	894

0 **Drive version:**

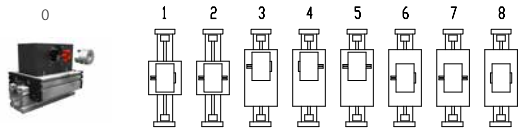

The standard version is supplied without shaft. A shaft can be retrofitted by inserting it into the pulley bore and securing it with 2 locking rings or tension sets (size 80 + 100).

Version 8 is the same as 0, but with double sided coupling claw.

Belt tab:le

Code No.		Size	Belt	mm/rev.	Number of teeth
0	**3**	**30**	5M15	100	20
0	**4**	**40**	5M25	130	26
0	**7**	**60 (S)**	8M30	192	24
0	**9**	**80 (S)**	8M50	256	32
1	**0**	**100**	8M70	304	38
1	**4**	**125**	8M100	304	38

Shaft dimensions / Coupling claw:

Size	Shaft ø h6 x length	Key	Coupling
30	10 x 27	3x3x25	9
40	14 x 35	5x5x28	14
60 (S)	18 x 45	6x6x40	19
80 (S)	22 x 45	6x6x40	24
100	30 x 55	8x7x50	28
125	40 x 55	12x8x50	------

ELSZ	60	0	0	0	0	0	7	1	1500
	Pos.	1	2	3	4	5	6	7	

Basic length + stroke = total length

For combination kits and connecting elements refer to chapter 2.2

Sample ordering code:
ELSZ 60 with standard body profile, standard carriage with widened belt and coupling claw on one side, 1170 mm stroke.

Linear system **ELSD 40, 60, 60S, 80, 80S, 100**

BELT DRIVE WITH ROTARY SHAFT

- OMEGA SYSTEM
- VERTICAL INSTALLATION POSITION
- GRIPPER ADAPTATION
- ROTATIONAL MOVEMENT

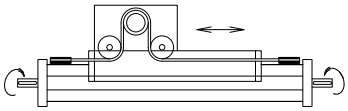

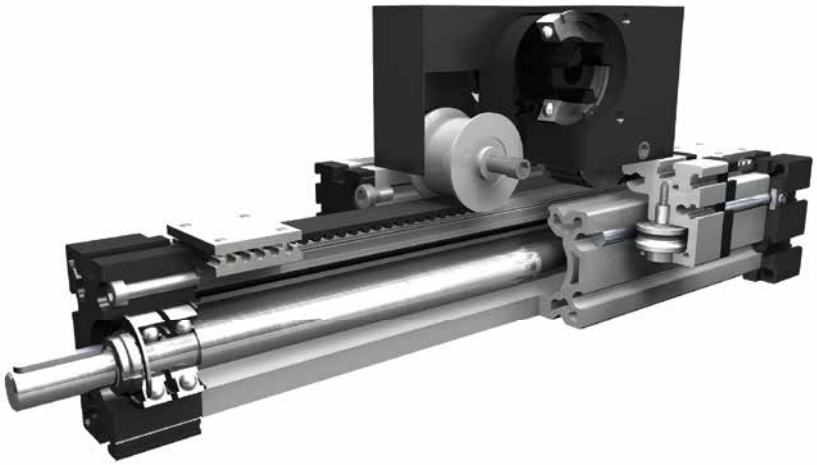

Function:
Same as ELSZ, but with an additional rotary shaft, fitted within the aluminium body. One end can be driven by any suitable motor, and the other end is provided with a shaft with feather key and an axial tapped hole for fitting grippers or other components.

Fitting position: As required. Max. length 2.000 mm.
Carriage mounting: By T-slots.
Unit mounting: By T-slots or tapped holes in the bearing blocks, mounting sets.
Belt type: HTD with steel reinforcement, no backlash when changing direction, repeatability ± 0,1 mm.

Forces and torques

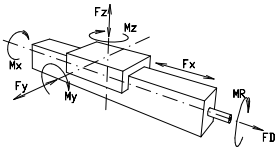

Size	ELSD 40		ELSD 60		ELSD 60 S		ELSD 80		ELSD 80 S		ELSD 100	
Forces/Torques	static	dynamic	static	dynamic	static	dynamic	static	dynamic	static	dynamic	static	dynamic
F_x (N)	390	350	894	800	894	800	1900	1800	1900	1800	4000	3800
F_y (N)	1200	700	3000	2000	4100	3100	3000	2000	4600	3600	8000	6500
F_z (N)	900	650	1700	1100	2160	1600	1700	1100	3000	1800	3600	2200
F_D (N)	50		150		150		250		250		400	
M_x (Nm)	25	20	67	43	88	65	90	55	170	140	300	230
M_y (Nm)	32	18	90	70	190	140	110	80	270	230	400	270
M_z (Nm)	35	25	120	100	230	170	150	120	300	220	750	500
M_R (Nm)	5		10		10		20		20		30	
All forces and torques relate to the following: existing values / table values $\frac{Fy}{Fy_{dyn}} + \frac{Fz}{Fz_{dyn}} + \frac{Mx}{Mx_{dyn}} + \frac{My}{My_{dyn}} + \frac{Mz}{Mz_{dyn}} \leq 1$												
No-load torque												
Nm	0,7		0,9		0,9		1,1		1,2		1,5	
Stiction torque M_R (Nm)	0,2		0,4		0,5		0,6		0,7		0,8	
Speed												
(m/s) max	4		5		7		6		8		8	
Tensile force												
permanent (N)	390		900		900		1900		1900		4000	
0,2 s (N)	480		1000		1000		2090		2090		4300	
Geometrical moments of inertia of aluminium profile												
I_x mm^4	$1{,}32 \times 10^5$		$6{,}79 \times 10^5$		$6{,}79 \times 10^5$		$18{,}99 \times 10^5$		$18{,}99 \times 10^5$		$44{,}4 \times 10^5$	
I_y mm^4	$1{,}34 \times 10^5$		$6{,}97 \times 10^5$		$6{,}97 \times 10^5$		$18{,}97 \times 10^5$		$18{,}97 \times 10^5$		$44{,}8 \times 10^5$	
E-Modulus N/mm^2	70000		70000		70000		70000		70000		70000	

For life-time calculation of rollers use our homepage.

Driving torque:

$$M_a = \frac{F * P * S_i}{2000 * \pi} + M_n$$

$$P_a = \frac{M_a * n}{9550}$$

F = force (N)
P = pulley action perimeter (mm)
Si = safety factor 1,2 … 2
M_n = no-load torque (Nm)
n = rpm pulley (min^{-1})
M_a = driving torque (Nm)
P_a = motor power (KW)

Deflection:

$$f = \frac{F * L^3}{E * I * 192}$$

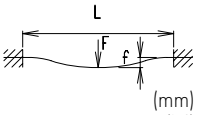

f = deflection (mm)
F = load (N)
L = free length (mm)
E = elastic modulus 70000 (N/mm²)
I = second moment of area (mm⁴)

Linear system **ELSD 40, 60, 60S, 80, 80S, 100**

Dimensions (mm)

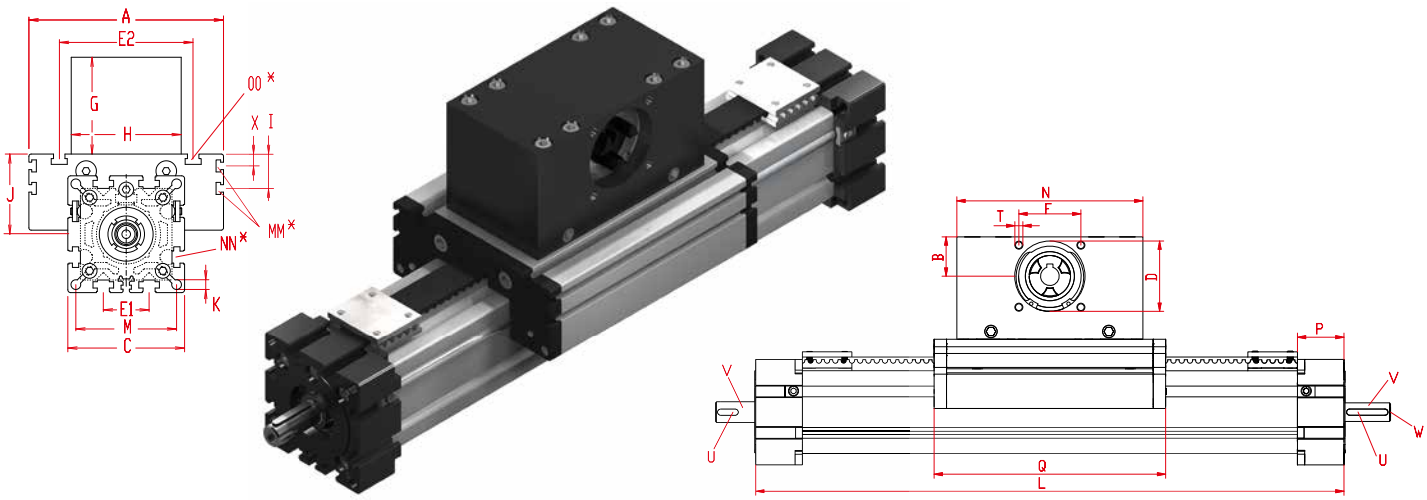

*For slide nuts refer to chapter 2.2 page 2

Increasing the carriage length will increase the basic length by the same amount.

Size ❒	Basic length L	A	B	C	D - 0,05	E1	E2	F	G	H	I	J	K	M	MM for	N	NN for	OO for	P	Q	T	X	Basic weight	Weight per 100 mm
ELSD 40	260	100	20	58	37	25	66	32	65	60	-	35	6,5	47	-	110	M 6	M 6	25	142	M 5	-	2,4 kg	0,40 kg
ELSD 60	320	144	30	82	47	30	96	42	80	80	-	49	8,5	69	-	130	M 8	M 8	35	168	M 6	-	5,9 kg	0,87 kg
ELSD 60S	345	170	30	82	47	30	108	42	80	80	-	53	8,5	69	-	130	M 8	M 8	35	194	M 6	-	6,9 kg	0,87 kg
ELSD 80	415	170	38	102	68	40	117	60	99	100	30,5	70	8,5	88	M 6	180	M 10	M 10	45	214	M 8	10,5	12,5 kg	1,30 kg
ELSD 80S	415	190	38	102	68	40	126	60	99	100	30	71	8,5	88	M 6	180	M 10	M 8	45	214	M 8	12,5	14,0 kg	1,30 kg
ELSD 100	585	230	60	130	90	50	155	80	130	130	29	89	10,5	112	M10	270	M 10	M 10	55	310	M 10	-	27,0 kg	1,70 kg

0 **Choice of guide body profile:**
(0) Standard **(2)** corrosion-protected guide rods and screws
(4) expanded corrosion-protected version
(depending on the availability of components)

0 **Choice of carriages:**

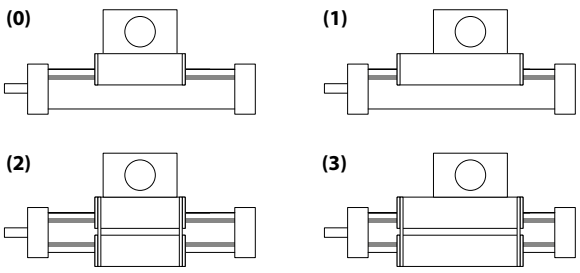

0 **Drive version:**

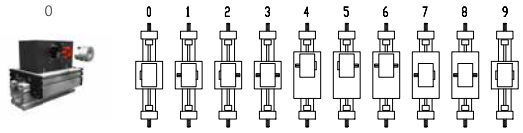

Shaft (drive end)			Shaft (load end)		
Size ❒	Shaft ø h6 x length (V)	Key (U)	Shaft ø h6 x length (V)	Key (U)	Thread (W)
40	10 x 20	3x3x10	12 x 20	4x4x10	M 6 x 12
60 (S)	14 x 25	5x5x20	17 x 25	5x5x20	M 8 x 20
80 (S)	18 x 30	6x6x20	20 x 30	6x6x20	M 10 x 20
100	22 x 35	6x6x30	25 x 35	8x7x30	M 12 x 25

Size	Version 1		Version 2		Version 3	
	Q	L	Q	L	Q	L
40	237	355	160	276	253	371
60	303	453	184	336	319	469
60S	329	469	214	365	349	489
80	379	575	230	431	395	591
80S	399	595	245	450	419	615
100	535	810	326	601	551	826

The standard version is supplied without shaft. A shaft can be retrofitted by inserting it into the pulley bore and securing it with 2 locking rings or tension sets (size 100).

Version 9 is the same as 0,
but with double sided coupling claw.

Belt table:

Code No.		Size	Belt	mm/rev.	Number of teeth
0	**3**	**40**	5M15	100	20
0	**4**	**60 (S)**	5M25	130	26
0	**7**	**80 (S)**	8M30	192	24
0	**9**	**100**	8M50	256	32

Shaft dimensions / Coupling claw:

Size	Shaft ø h6 x length	Key	Coupling
40	10 x 27	3x3x25	9
60 (S)	14 x 35	5x5x28	14
80 (S)	18 x 45	6x6x40	19
100	22 x 45	6x6x40	24

ELSD	60	0	0	0	0	0	4	1	1500
	Pos.	1	2	3	4	5	6	7	

Basic length + stroke = total length

For combination kits and connecting elements refer to chapter 2.2

Sample ordering code:
ELSD 60 with standard body profile, standard carriage and coupling claw on one side, 1180 mm stroke

Linear system **ELSD 40, 60, 60S, 80, 80S, 100**

BELT DRIVE WITH WIDENED BELT AND ROTARY SHAFT

- OMEGA SYSTEM
- BELT WIDENING
- GRIPPER ADAPTATION
- ROTATIONAL MOVEMENT

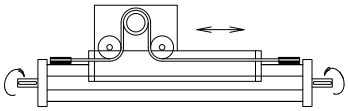

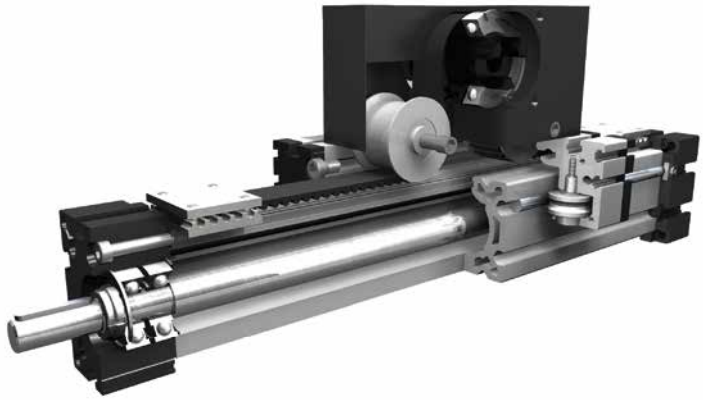

Function:
Same as ELSZ, but with an additional rotary shaft, fitted within the aluminium body. One end can be driven by any suitable motor, and the other end is provided with a shaft with feather key and an axial tapped hole for fitting grippers or other components.

Fitting position: As required. Max. length 2.000 mm.
Carriage mounting: By T-slots.
Unit mounting: By T-slots or tapped holes in the bearing blocks, mounting sets.
Belt type: HTD with steel reinforcement, no backlash when changing direction, repeatability ± 0,1 mm.

Forces and torques

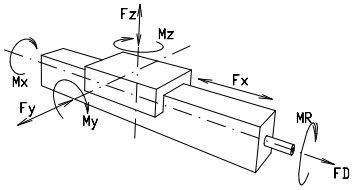

Size	ELSD 40		ELSD 60		ELSD 60 S		ELSD 80		ELSD 80 S		ELSD 100	
Forces/Torques	static	dynamic	static	dynamic	static	dynamic	static	dynamic	static	dynamic	static	dynamic
F_x (N)	894	800	1900	1800	1900	1800	4000	3800	4000	3800	5900	5750
F_y (N)	1200	700	3000	2000	4100	3100	3000	2000	4600	3600	8000	6500
F_z (N)	900	650	1700	1100	2160	1600	1700	1100	3000	1800	3600	2200
F_D (N)	50		150		150		250		250		400	
M_x (Nm)	25	20	67	43	88	65	90	55	170	140	300	230
M_y (Nm)	32	18	90	70	190	140	110	80	270	230	400	270
M_z (Nm)	35	25	120	100	230	170	150	120	300	220	750	500
M_R (Nm)	5		10		10		20		20		30	
All forces and torques relate to the following: existing values / table values $\frac{Fy}{Fy_{dyn}} + \frac{Fz}{Fz_{dyn}} + \frac{Mx}{Mx_{dyn}} + \frac{My}{My_{dyn}} + \frac{Mz}{Mz_{dyn}} \leq 1$												
No-load torque												
Nm	0,7		0,9		0,9		1,1		1,2		1,5	
Stiction torque M_R (Nm)	0,2		0,4		0,5		0,6		0,7		0,8	
Speed												
(m/s) max	4		5		7		6		8		8	
Tensile force												
permanent (N)	900		1900		1900		4000		4000		5900	
0,2 s (N)	1000		2090		2090		4300		4300		6350	
Geometrical moments of inertia of aluminium profile												
I_x mm⁴	$1{,}32 \times 10^5$		$6{,}79 \times 10^5$		$6{,}79 \times 10^5$		$18{,}99 \times 10^5$		$18{,}99 \times 10^5$		$44{,}4 \times 10^5$	
I_y mm⁴	$1{,}34 \times 10^5$		$6{,}97 \times 10^5$		$6{,}97 \times 10^5$		$18{,}97 \times 10^5$		$18{,}97 \times 10^5$		$44{,}8 \times 10^5$	
E-Modulus N/mm²	70000		70000		70000		70000		70000		70000	

For life-time calculation of rollers use our homepage.

Driving torque:

$$M_a = \frac{F * P * S_i}{2000 * \pi} + M_n$$

$$P_a = \frac{M_a * n}{9550}$$

F = force (N)
P = pulley action perimeter (mm)
Si = safety factor 1,2 … 2
M_n = no-load torque (Nm)
n = rpm pulley (min^{-1})
M_a = driving torque (Nm)
P_a = motor power (KW)

Deflection:

$$f = \frac{F * L^3}{E * I * 192}$$

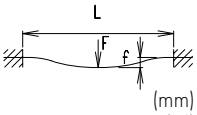

f = deflection (mm)
F = load (N)
L = free length (mm)
E = elastic modulus 70000 (N/mm²)
I = second moment of area (mm⁴)

Linear system **ELSD 40, 60, 60S, 80, 80S, 100**

Dimensions (mm)

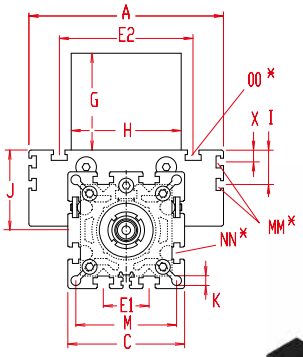

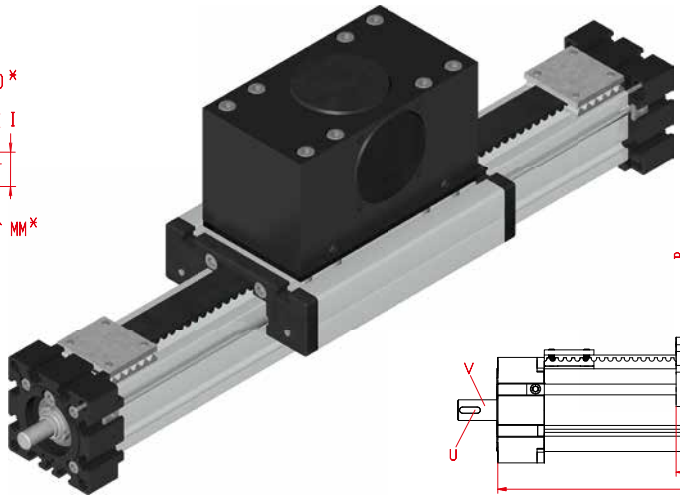

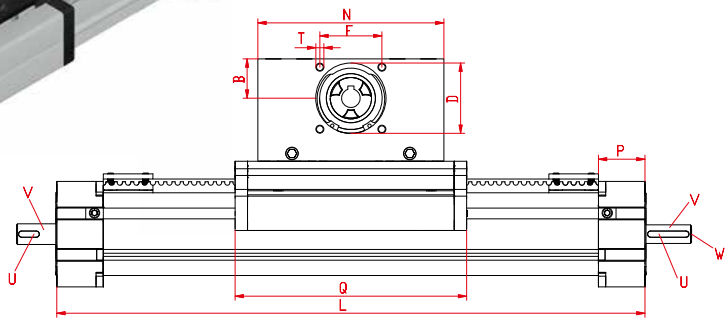

*For slide-nuts refer to chapter 2.2 page 2

Increasing the carriage length will increase the basic length by the same amount.

Size ❒	Basic length L	A	B	C	D - 0,05	E1	E2	F	G	H	I	J	K	M	MM for	N	NN for	OO for	P	Q	T	X	Basic weight	Weight per 100 mm
ELSD 40	286	100	30	58	47	25	66	42	83	80	-	35	6,5	47	-	130	M 6	M 6	25	164	M 6	-	2,7 kg	0,40 kg
ELSD 60	395	144	38	82	68	30	96	60	104	100	-	49	8,5	69	-	180	M 8	M 8	35	214	M 8	-	6,5 kg	0,87 kg
ELSD 60S	395	170	38	82	68	30	108	60	102	100	-	53	8,5	69	-	180	M 8	M 8	35	214	M 8	-	7,5 kg	0,87 kg
ELSD 80	510	170	60	102	90	40	117	80	140	130	30,5	70	8,5	88	M 6	270	M 10	M 10	45	304	M 10	10,5	13,7 kg	1,30 kg
ELSD 80S	510	190	60	102	90	40	126	80	138,4	130	30	71	8,5	88	M 6	270	M 10	M 8	45	304	M 10	12,5	15,2 kg	1,30 kg
ELSD 100	625	230	62	130	110	50	155	100	143	160	29	89	10,5	112	M10	310	M 10	M 10	55	350	M 10	-	33,4 kg	1,70 kg

0 **Choice of guide body profile:**
(0) Standard **(2)** corrosion-protected guide rods and screws
(4) expanded corrosion-protected version
(depending on the availability of components)

0 **Choice of carriages:**

(0)

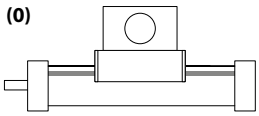

(1)

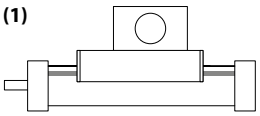

(2)

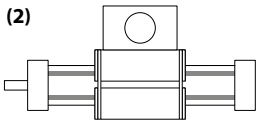

(3)

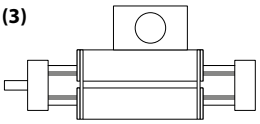

Shaft (drive end)			Shaft (load end)		
Size	Shaft ø h6 x length (V)	Key (U)	Shaft ø h6 x length (V)	Key (U)	Thread (W)
40	10 x 20	3x3x10	12 x 20	4x4x10	M 6 x 12
60 (S)	14 x 25	5x5x20	17 x 25	5x5x20	M 8 x 20
80 (S)	18 x 30	6x6x20	20 x 30	6x6x20	M 10 x 20
100	22 x 35	6x6x30	25 x 35	8x7x30	M 12 x 25

Size	Version 1		Version 2		Version 3	
	Q	L	Q	L	Q	L
40	257	381	180	302	273	397
60	353	534	230	411	369	550
60S	379	560	234	415	399	580
80	469	675	320	526	485	691
80S	489	695	324	530	509	715
100	575	850	366	641	591	866

0 **Drive version:**

0

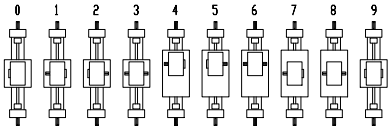

The standard version is supplied without shaft. A shaft can be retrofitted by inserting it into the pulley bore and securing it with 2 locking rings or tension sets (size 80 + 100).

Version 9 is the same as 0,
but with double sided coupling claw.

Belt table:

Code No.		Size	Belt	mm/rev.	Number of teeth
0	**4**	**40**	5M25	130	26
0	**7**	**60 (S)**	8M30	192	24
0	**9**	**80 (S)**	8M50	256	32
1	**0**	**100**	8M70	304	38

Shaft dimensions / Coupling claw:

Size	Shaft ø h6 x length	Key	Coupling
40	14 x 35	5x5x28	14
60 (S)	18 x 45	6x6x40	19
80 (S)	22 x 45	6x6x40	24
100	30 x 55	8x7x40	28

ELSD	60	0	0	0	0	0	7	1	1500
	Pos.	1	2	3	4	5	6	7	

Basic length + stroke = total length

For combination kits and connecting elements refer to chapter 2.2

Sample ordering code:
ELSD 60 with standard body profile, standard carriage and coupling claw on one side, 1146 mm stroke

Linear system **ELZT 40, 60, 60S, 80, 80S, 100**

TELESCOPIC BELT DRIVE

- OMEGA SYSTEM
- TELESCOPIC SYSTEM
- VERTICAL INSTALLATION POSITION
- CANTILEVER AXIS

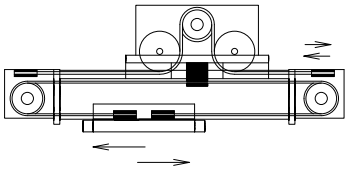

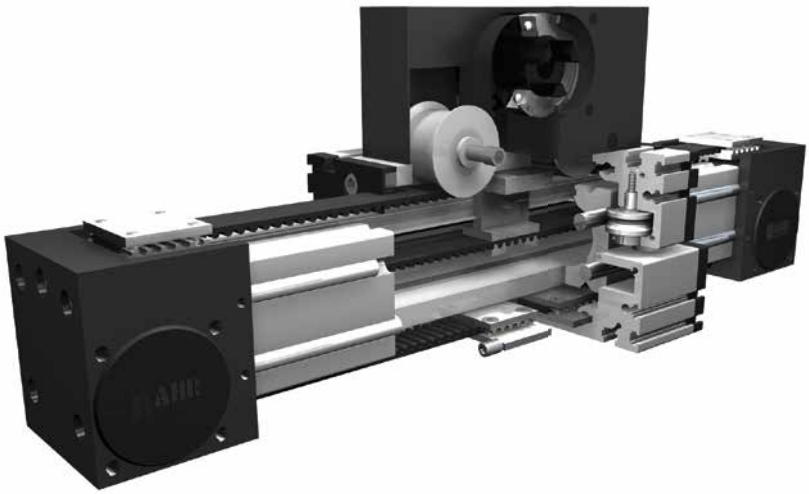

Function:
This unit consists of an aluminium square profile with integrated, hardened steel guide rods. Two carriages, which have internal linear ball bearings that can be adjusted free of play, are driven along the guide rods in opposite directions by 2 belts. The pulleys include maintenance-free ball bearings. One belt is tensioned by a tensioning device within the carriage. The other timing belt is tensioned by a tensioning device within the bearing block. The carriage with the drive block (with motor) is screwed to the crosshead.

Fitting position: Vertical, conditionally horizontal; Max. length 3.000 mm.
Unit mounting: By T-slots in the carriage, extension arm
Belt type: HTD with steel reinforcement, no backlash when changing direction, repeatability ± 0,1 mm.

Forces and torques

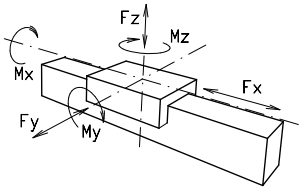

Size	ELZT 40		ELZT 60		ELZT 60 S		ELZT 80		ELZT 80 S		ELZT 100	
Forces/torques	static	dynamic	static	dynamic	static	dynamic	static	dynamic	static	dynamic	static	dynamic
F_x (N)	360	300	580	470	580	470	1800	1570	1800	1570	4000	3500
F_y (N)	1200	700	3000	2000	4100	3100	3000	2000	4600	3600	8000	6500
F_z (N)	900	650	1700	1100	2160	1600	1700	1100	3000	1800	3600	2200
M_x (Nm)	25	20	67	43	88	65	90	55	170	140	300	230
M_y (Nm)	32	18	90	70	190	140	110	80	270	230	400	270
M_z (Nm)	35	25	120	100	230	170	150	120	370	310	750	500

All forces and torques relate to the following:

existing values / table values: $\frac{Fy}{Fy_{dyn}} + \frac{Fz}{Fz_{dyn}} + \frac{Mx}{Mx_{dyn}} + \frac{My}{My_{dyn}} + \frac{Mz}{Mz_{dyn}} \leq 1$

No-load torque						
Nm	0,9	1,1	1,1	1,3	1,2	2,4
Speed						
(m/s) max	4	5	7	6	8	8
Tensile force						
permanent (N)	360	580	580	1800	1800	4000
0,2 s (N)	450	700	700	2200	2200	4300
Geometrical moments of inertia of aluminium profile						
I_x mm^4	$1{,}32 \times 10^5$	$6{,}79 \times 10^5$	$6{,}79 \times 10^5$	$18{,}99 \times 10^5$	$18{,}99 \times 10^5$	$44{,}4 \times 10^5$
I_y mm^4	$1{,}34 \times 10^5$	$6{,}97 \times 10^5$	$6{,}97 \times 10^5$	$18{,}97 \times 10^5$	$18{,}97 \times 10^5$	$44{,}8 \times 10^5$
E-Modulus N/mm^2	70000	70000	70000	70000	70000	70000

For life-time calculation of rollers use our homepage.

Driving torque:

$$M_a = \frac{F * P * S_i}{2000 * \pi} + M_n$$

$$P_a = \frac{M_a * n}{9550}$$

F = force (N)
P = pulley action perimeter (mm)
Si = safety factor 1,2 … 2
M_n = no-load torque (Nm)
n = rpm pulley (min^{-1})
M_a = driving torque (Nm)
P_a = motor power (KW)

Deflection:

$$f = \frac{F * L^3}{E * I * 192}$$

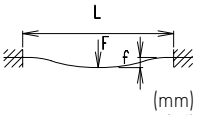

f = deflection (mm)
F = load (N)
L = free length (mm)
E = elastic modulus 70000 (N/mm²)
I = second moment of area (mm⁴)

Linear system **ELZT 40, 60, 60S, 80, 80S, 100**

Dimensions (mm)

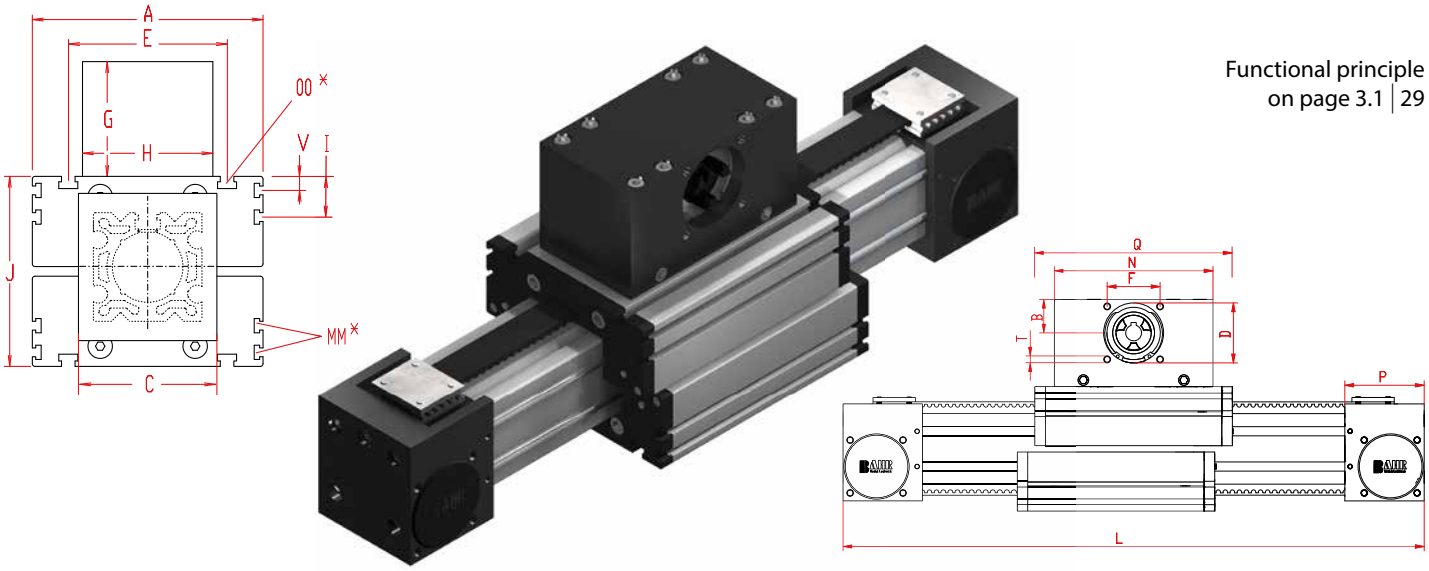

Functional principle
on page 3.1 | 29

*For slide nuts refer to chapter 2.2 page 2

Increasing the carriage length will increase the basic length by the same amount.

Size ❒	Basic length L	A	B	C	D - 0,05	F	G	H	I	J	MM for	N	OO for	P	Q	T	V	Basic weight	Weight per 100 mm
ELZT 40	265	100	30	58	47	42	83	80	-	70	-	130	M 6	49	164	M 6	-	3,6 kg	0,31 kg
ELZT 60	345	144	39	80	68	60	105	100	-	98	-	180	M 8	59	218	M 8	-	9,1 kg	0,73 kg
ELZT 60S	370	170	39	80	68	60	105	100	-	106	-	180	M 8	59	220	M 8	-	10,1 kg	0,73 kg
ELZT 80	494	170	60	100	90	80	140	130	30,5	140	M 6	270	M 10	90	304	M 10	10,5	24,0 kg	1,14 kg
ELZT 80S	494	190	60	100	90	80	140	130	30	142	M 6	270	M 8	90	304	M 10	12,5	26,0 Kg	1,14 kg
ELZT 100	570	230	62	130	110	100	143	160	29	178	M 10	310	M 10	110	350	M 10	-	40,6 kg	1,95 kg

0 **Choice of guide body profile:**
(0) Standard **(2)** corrosion-protected guide rods and screws
(4) expanded corrosion-protected version (depending on the availability of components)

0 **Choice of carriages:**

(0) **(1)** **(3)**

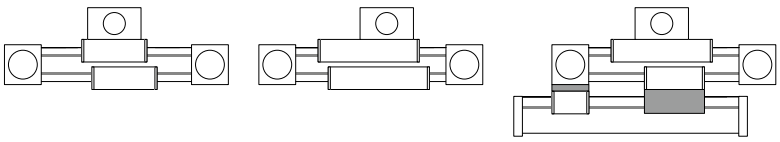

Size	Version 1		Version 3	
	Q	L	Q	L
40	257	360	257	360
60	353	480	353	480
60S	379	506	379	506
80	469	659	469	659
80S	489	679	489	679
100	575	795	575	795

0 **Drive version:**

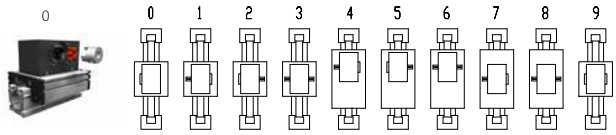

The standard version is supplied without shaft. A shaft can be retrofitted by inserting it into the pulley bore and securing it with 2 locking rings or tension sets (size 80 + 100).

Version 9 is the same as 0, but with double sided coupling claw.

Belt table:

Code No.		Size	Belt	mm/rev.	Number of teeth
0	**4**	**40**	5M25	130	26
0	**7**	**60 (S)**	8M30	192	24
0	**9**	**80 (S)**	8M50	256	32
1	**0**	**100**	8M70	304	38

Shaft dimensions / Coupling Claw:

Size	Shaft ø h6 x length	Key	Coupling
40	14 x 35	5x5x28	14
60 (S)	18 x 45	6x6x40	19
80 (S)	22 x 45	6x6x40	24
100	30 x 55	8x7x40	28

ELZT	**60**	**6**	**0**	**0**	**0**	**0**	**4**	**1**	**1500**
	Pos.	1	2	3	4	5	6	7	

Basic length + stroke = total length

For combination kits and connecting elements refer to chapter 2.2

Sample ordering code:
ELZT 60 with standard body profile, standard carriage and coupling claw on one side, 2310 mm stroke

Linear system **ELHZ 60, 60S, 80, 80S, 100, 125**

INTERNAL BELT DRIVE

- CLEAN ROOM
- TOOTHED BELT HORIZONTAL
- HIGH DYNAMICS

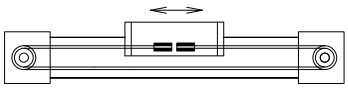

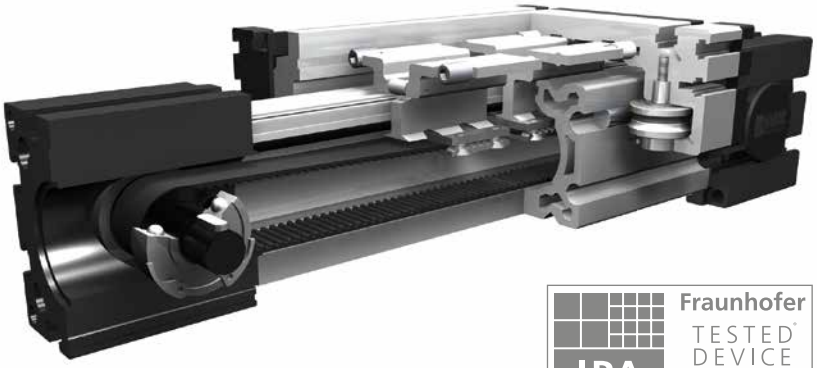

Fraunhofer IPA TESTED DEVICE
Lineareinheit ELHZ 60
Report No. BA 9807-151

Function:
This linear unit consists of an aluminium square profile with integrated, hardened steel guide rods. The carriage, which has internal linear ball bearings that can be adjusted free of play, is driven along the guide rods by a timing belt. Toothed pulley has maintenance-free ball bearings. Belt tension can be readjusted by a simple screw adjustment device in the carriage. This device can also be used for symmetrical adjustment of two or more linear units running parallel.
This linear unit is suitable for application in clean rooms of clean-room classification 1.000 (corresponding to US Fed. Standard 209 E).

Fitting position: As required. Max. length 3.000 mm.
Carriage mounting: By T-slots.
Unit mounting: By tapped holes or tapped holes in the bearing block, mounting sets.
Belt type: HTD with steel reinforcement, no backlash when changing direction, repeatability ± 0,1 mm.

Forces and torques

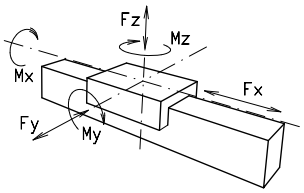

Size	ELHZ 60		ELHZ 60 S		ELHZ 80		ELHZ 80 S		ELHZ 100		ELHZ 125	
Forces/Torques	static	dynamic	static	dynamic	static	dynamic	static	dynamic	static	dynamic	static	dynamic
F_x (N)	700	580	700	580	1000	840	1000	840	3100	2600	5000	4950
F_y (N)	3000	2000	4100	3100	3000	2000	4600	3600	8000	6500	12000	9000
F_z (N)	1700	1100	2160	1600	1700	1100	3000	1800	3600	2200	6000	4500
M_x (Nm)	67	43	88	65	90	55	170	140	300	230	600	450
M_y (Nm)	90	70	190	140	110	80	270	230	400	270	750	600
M_z (Nm)	120	100	230	170	150	120	300	220	750	500	1350	1150

All forces and torques relate to the following:

existing values / table values:

$$\frac{Fy}{Fy_{dyn}} + \frac{Fz}{Fz_{dyn}} + \frac{Mx}{Mx_{dyn}} + \frac{My}{My_{dyn}} + \frac{Mz}{Mz_{dyn}} \leq 1$$

	ELHZ 60	ELHZ 60 S	ELHZ 80	ELHZ 80 S	ELHZ 100	ELHZ 125
No-load torque						
Nm	0,5	0,5	0,8	1,2	1,2	1,6
Speed						
(m/s) max	3	4	4	4	5	6
Tensile force						
permanent (N)	700	700	1000	1000	3100	5000
0,2 s (N)	800	800	1150	1150	3400	5450
Geometrical moments of inertia of aluminium profile						
I_x mm⁴	$6{,}79 \times 10^5$	$6{,}79 \times 10^5$	$18{,}99 \times 10^5$	$18{,}99 \times 10^5$	$44{,}4 \times 10^5$	$101{,}5 \times 10^5$
I_y mm⁴	$6{,}97 \times 10^5$	$6{,}97 \times 10^5$	$18{,}97 \times 10^5$	$18{,}97 \times 10^5$	$44{,}8 \times 10^5$	$101{,}5 \times 10^5$
E-Modulus N/mm²	70000	70000	70000	70000	70000	70000

For life-time calculation of rollers use our homepage.

Driving torque:

$$M_a = \frac{F * P * S_i}{2000 * \pi} + M_n$$

$$P_a = \frac{M_a * n}{9550}$$

F	= force	(N)
P	= pulley action perimeter	(mm)
Si	= safety factor 1,2 … 2	
M_n	= no-load torque	(Nm)
n	= rpm pulley	(min^{-1})
M_a	= driving torque	(Nm)
P_a	= motor power	(KW)

Deflection:

$$f = \frac{F * L^3}{E * I * 192}$$

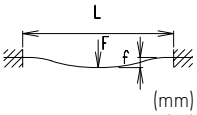

f	= deflection	(mm)
F	= load	(N)
L	= free length	(mm)
E	= elastic modulus 70000	(N/mm²)
I	= second moment of area	(mm⁴)

Linear system **ELHZ 60, 60S, 80, 80S, 100, 125**

Dimensions (mm)

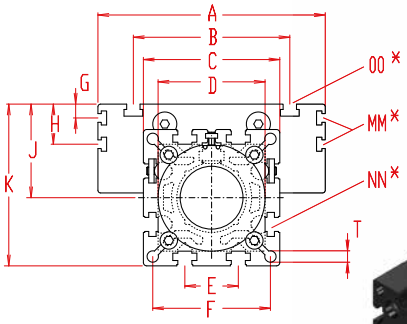

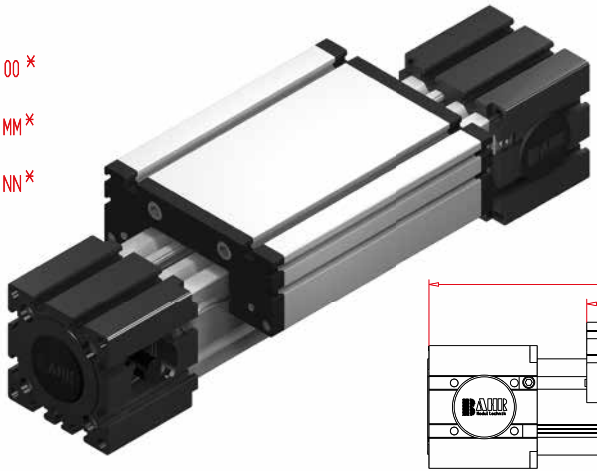

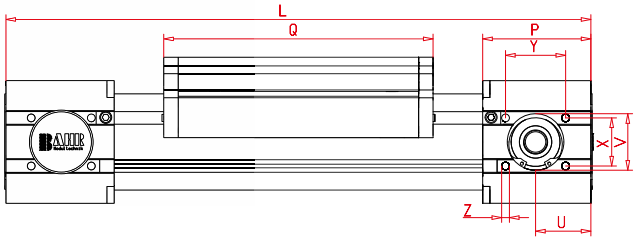

*For slide nuts refer to chapter 2.2 page 2

Increasing the carriage length will increase the basic length by the same amount.

Size ❒	Basic length L	A	B	C	D ± 0,05	E	F	G	H	J	K	MM for	NN for	OO for	P	Q	T	U	V - 0,05	W¹	X	Y	Z	Basic weight	Weight per 100 mm
ELHZ 60	290	144	96	82	62x1	30	69	--	-	49	90	-	M 8	M 8	59	168	8,5	23	37	14	30	36	M 6	4,8 kg	0,62 kg
ELHZ 60S	315	170	108	82	62x1	30	69	--	-	53	94	-	M 8	M 8	59	194	8,5	23	37	14	30	36	M 6	5,8 kg	0,62 kg
ELHZ 80	375	170	117	102	80x1	40	88	10,5	30,5	70	121	M 6	M10	M10	90	194	8,5	38	47	18	40	50	M 8	10,0 kg	1,00 kg
ELHZ 80S	395	190	126	102	80x1	40	88	12,5	30	71	122	M 6	M10	M 8	90	214	8,5	38	47	18	40	50	M 8	11,0 kg	1,00 kg
ELHZ 100	530	230	155	130	110x1	50	112	-	29	89	154	M10	M10	M10	110	300	10,5	45	68	19	50	64	M10	24,0 kg	1,60 kg
ELHZ 125	630	295	200	165	130x2	60	142	-	30	107,5	190	M10	M10	M12	130	365	13,0	58	90	35	60	85	M10	37,0 kg	2,10 kg

W¹ = standard shaft

0 **Choice of guide body profile:**
(0) Standard **(2)** corrosion-protected guide rods and screws
(4) expanded corrosion-protected version (depending on the availability of components)

0 **Choice of carriages:**

(0)

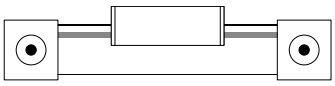

(1)

Size	Version 1	
	Q	L
60	184	306
60S	214	336
80	210	391
80S	234	415
100	316	546
125	389	649

0 **Drive version:**

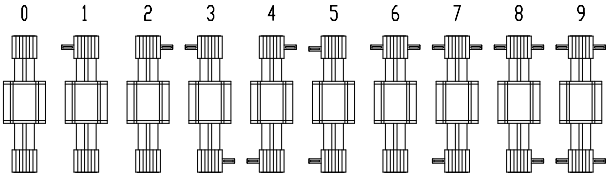

The standard version 0 is supplied with 4 flush mounted shafts.

Belt table:

Code No.		Size	Belt	mm/rev.	Number of teeth
0	**4**	**60 (S)**	5M 25	80	16
0	**4**	**80 (S)**	5M 25	110	22
0	**9**	**100**	8M 48	144	18
0	**9**	**125**	8M 50	192	24

Shaft dimensions:

Size	Shaft ø h6 x length	Key
60 (S)	14 x 35	5x5x28
80 (S)	18 x 45	6x6x40
100	22 x 45	6x6x40
125	30 x 55	8x7x50

ELHZ	60	0	0	0	0	0	4	1	1500
	Pos.	1	2	3	4	5	6	7	

Basic length + stroke = total length

For combination kits and connecting elements refer to chapter 2.2

Sample ordering code:
ELHZ 60, with standard body profile, standard carriage and 4 flush mounted shafts, 1210 mm stroke.

Linear system **ELVZ 60, 60S, 80, 80S, 100, 125**

INTERNAL BELT DRIVE

- CLEAN ROOM
- TOOTHED BELT VERTICAL
- HIGH DYNAMICS

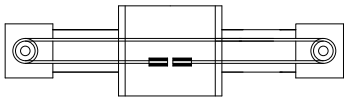

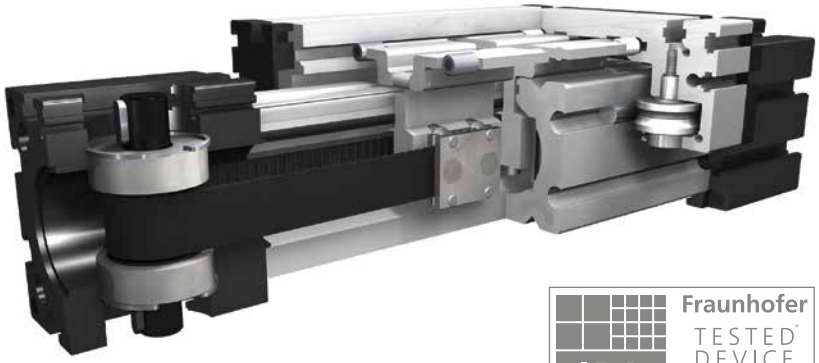

Fraunhofer IPA TESTED DEVICE Lineareinheit ELVZ 60

Function:
This linear unit consists of an aluminium square profile with integrated, hardened steel guide rods. The carriage, which has internal linear ball bearings that can be adjusted free of play, is driven along the guide rods by a toothed belt. Toothed pulley has maintenance-free ball bearings. Belt tension can be readjusted by a simple screw adjustment device in the carriage. This device can also be used for symmetrical adjustment of two or more linear units running parallel. This linear unit is suitable for application in clean rooms of clean-room classification 1.000 (corresponding to US Fed. Standard 209 E).

Fitting position: As required. Max. length 3.000 mm.
Carriage mounting: By T-slots.
Unit mounting: By tapped holes or tapped holes in the bearing block, mounting sets.
Belt type: HTD with steel reinforcement, no backlash when changing direction, repeatability ± 0,1 mm.

Forces and torques

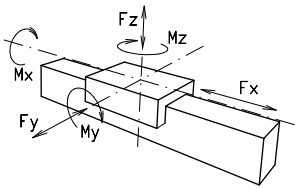

Size	ELVZ 60		ELVZ 60 S		ELVZ 80		ELVZ 80 S		ELVZ 100		ELVZ 125	
Forces/Torques	static	dynamic	static	dynamic	static	dynamic	static	dynamic	static	dynamic	static	dynamic
F_x (N)	700	580	700	580	1000	840	1000	840	3100	2600	5000	4950
F_y (N)	3000	2000	4100	3100	3000	2000	4600	3600	8000	6500	12000	9000
F_z (N)	1700	1100	2160	1600	1700	1100	3000	1800	3600	2200	6000	4500
M_x (Nm)	67	43	88	65	90	55	170	140	300	230	600	450
M_y (Nm)	90	70	190	140	110	80	270	230	400	270	750	600
M_z (Nm)	120	100	230	170	150	120	300	220	750	500	1350	1150

All forces and torques relate to the following:

existing values / table values: $\frac{Fy}{Fy_{dyn}} + \frac{Fz}{Fz_{dyn}} + \frac{Mx}{Mx_{dyn}} + \frac{My}{My_{dyn}} + \frac{Mz}{Mz_{dyn}} \leq 1$

No-load torque						
Nm	0,5	0,5	0,8	1,2	1,2	1,6
Speed						
(m/s) max	3	4	4	4	5	6
Tensile force						
permanent (N)	700	700	1000	1000	3100	5000
0,2 s (N)	800	800	1150	1150	3400	5450
Geometrical moments of inertia of aluminium profile						
I_x mm⁴	$6{,}79 \times 10^5$	$6{,}79 \times 10^5$	$18{,}99 \times 10^5$	$18{,}99 \times 10^5$	$44{,}4 \times 10^5$	$101{,}5 \times 10^5$
I_y mm⁴	$6{,}97 \times 10^5$	$6{,}97 \times 10^5$	$18{,}97 \times 10^5$	$18{,}97 \times 10^5$	$44{,}8 \times 10^5$	$101{,}5 \times 10^5$
E-Modulus N/mm²	70000	70000	70000	70000	70000	70000

For life-time calculation of rollers use our homepage.

Driving torque:

$$M_a = \frac{F * P * S_i}{2000 * \pi} + M_n$$

$$P_a = \frac{M_a * n}{9550}$$

F	= force	(N)
P	= pulley action perimeter	(mm)
Si	= safety factor 1,2 … 2	
M_n	= no-load torque	(Nm)
n	= rpm pulley	(min^{-1})
M_a	= driving torque	(Nm)
P_a	= motor power	(KW)

Deflection:

$$f = \frac{F * L^3}{E * I * 192}$$

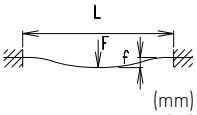

f	= deflection	(mm)
F	= load	(N)
L	= free length	(mm)
E	= elastic modulus 70000	(N/mm²)
I	= second moment of area	(mm⁴)

Linear system **ELVZ 60, 60S, 80, 80S, 100, 125**

Dimensions (mm)

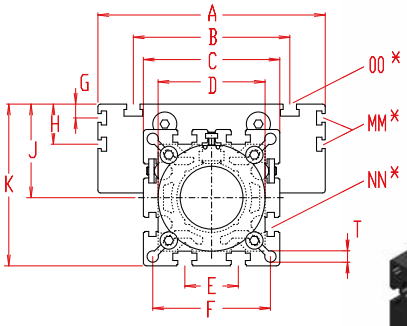

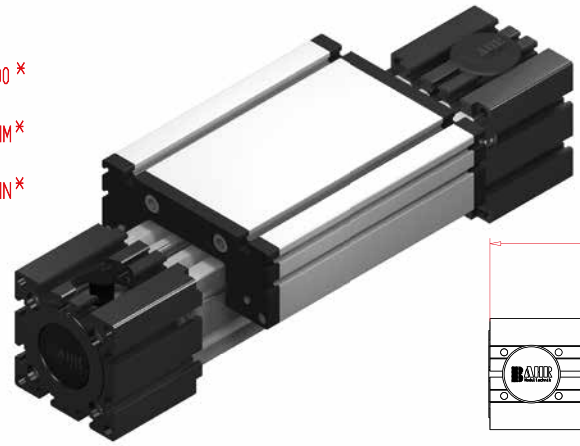

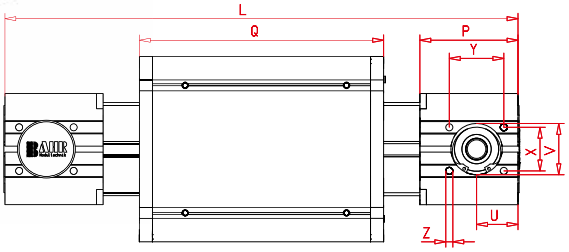

*For slide nuts refer to chapter 2.2 page 2

Increasing the carriage length will increase the basic length by the same amount.

Size ❒	Basic length L	A	B	C	D ± 0,05	E	F	G	H	J	K	MM for	NN for	OO for	P	Q	T	U	V - 0,05	W¹	X	Y	Z	Basic weight	Weight per 100 mm
ELVZ 60	290	144	96	82	62x1	30	69	--	-	49	90	-	M 8	M 8	59	168	8,5	23	37	14	30	36	M 6	4,8 kg	0,62 kg
ELVZ 60S	315	170	108	82	62x1	30	69	--	-	53	94	-	M 8	M 8	59	194	8,5	23	37	14	30	36	M 6	5,8 kg	0,62 kg
ELVZ 80	375	170	117	102	80x1	40	88	10,5	30,5	70	121	M 6	M10	M10	90	194	8,5	38	47	18	40	50	M 8	10,0 kg	1,00 kg
ELVZ 80S	395	190	126	102	80x1	40	88	12,5	30	71	122	M 6	M10	M 8	90	214	8,5	38	47	18	40	50	M 8	11,0 kg	1,00 kg
ELVZ 100	530	230	155	130	110x1	50	112	-	29	89	154	M10	M10	M10	110	300	10,5	45	68	19	50	64	M10	24,0 kg	1,60 kg
ELVZ 125	630	295	200	165	130x2	60	142	-	30	107,5	190	M10	M10	M12	130	365	13	58	90	35	60	85	M10	37,0 kg	2,10 kg

W¹ = standard shaft

1 **(1)** Belt connection right

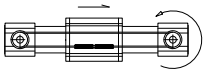

(2) Belt connection left

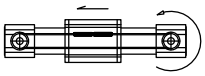

0 **Choice of guide body profile:**
(0) Standard **(2)** corrosion-protected guide rods and screws
(4) expanded corrosion-protected version (depending on the availability of components)

0 **Choice of carriages:**

(0)

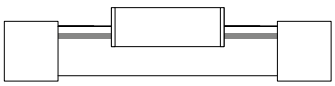

(1)

Size	Version 1	
	Q	L
60	184	306
60S	214	336
80	210	391
80S	234	415
100	316	546
125	389	649

0 **Drive version:**

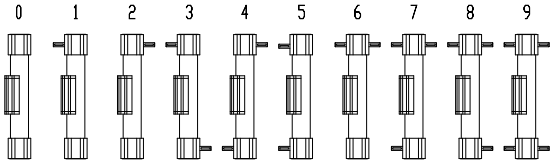

The standard version 0 is supplied with 4 flush mounted shafts.

Belt table

Code No.		Size	Belt	mm/rev.	Number of teeth
0	**4**	**60 (S)**	5M 25	80	16
0	**4**	**80 (S)**	5M 25	110	22
0	**9**	**100**	8M 48	144	18
0	**9**	**125**	8M 50	192	24

Shaft dimensions

Size	Shaft ø h6 x length	Key
60 (S)	14 x 35	5x5x28
80 (S)	18 x 45	6x6x40
100	22 x 45	6x6x40
125	30 x 55	8x7x50

ELVZ	60	1	0	0	0	0	4	1	1500
	Pos.	1	2	3	4	5	6	7	

Basic length + stroke = total length

For combination kits and connecting elements refer to chapter 2.2

Sample ordering code:
ELVZ 60 with belt connection right, standard body profile, standard carriage and 4 flush mounted shafts, 1210 mm stroke

Linear system **ELVZ 60, 60S, 80, 80S, 100, 125**

INTERNAL BELT DRIVE - TWO CARRIAGES MOVING IN OPPOSITE DIRECTIONS

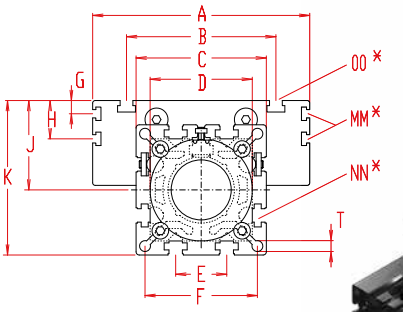

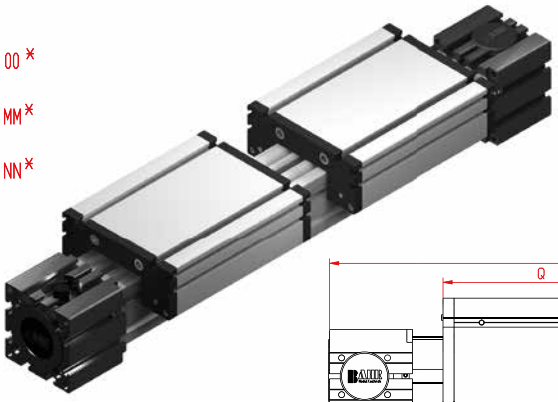

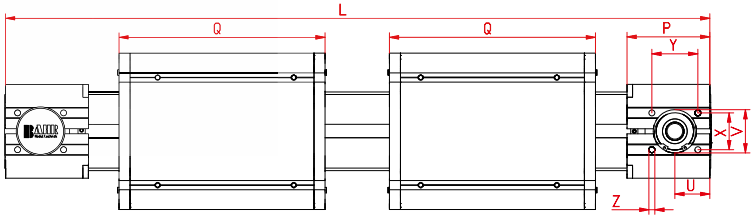

*For slide nuts refer to chapter 2.2 page 2

Increasing the carriage length will increase the basic length by the same amount

Size ❒	Basic length L	A	B	C	D ± 0,05	E	F	G	H	J	K	MM for	NN for	OO for	P	Q	T	U	V - 0,05	W¹	X	Y	Z	Basic weight	Weight per 100 mm
ELVZ 60	460	144	96	82	62x1	30	69	--	--	49	90	--	M 8	M 8	59	168	8,5	23	37	14	30	36	M 6	6,5 kg	0,62 kg
ELVZ 60S	510	170	108	82	62x1	30	69	--	--	53	94	--	M 8	M 8	59	194	8,5	23	37	14	30	36	M 6	8,5 kg	0,62 kg
ELVZ 80	570	170	117	102	80x1	40	88	10,5	30,5	70	121	M 6	M10	M10	90	194	8,5	38	47	18	40	50	M 8	13,0 kg	1,00 kg
ELVZ 80S	610	190	123	102	80x1	40	88	12,5	30	71	122	M 6	M10	M 8	90	214	8,5	38	47	18	40	50	M 8	15,0 kg	1,00 kg
ELVZ 100	830	230	155	130	110x1	50	112	--	29	89	154	M10	M10	M10	110	300	10,5	45	68	19	50	64	M10	31,0 kg	1,60 kg
ELVZ 125	990	295	200	165	130x2	60	142	--	30	107,5	190	M10	M10	M12	130	365	13	58	90	35	60	85	M10	50,5 kg	2,10 kg

W¹ = standard shaft

7 **(7)** Belt connection right

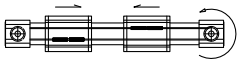

(8) Belt connection left

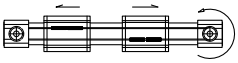

0 **Choice of guide body profile:**
(0) Standard **(2)** corrosion-protected guide rods and screws
(4) expanded corrosion-protected version (depending on the availability of components)

0 **Choice of carriages:**

(0)

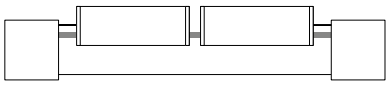

(1)

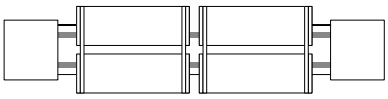

Size	Version 1	
	Q	L
60	184	492
60S	214	542
80	210	602
80S	234	650
100	316	862
125	389	1038

0 **Drive version:**

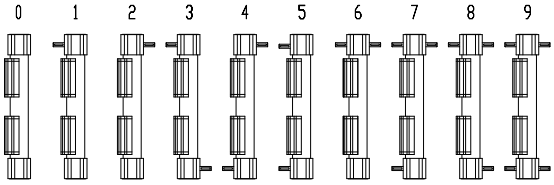

The standard version 0 is supplied with 4 flush mounted shafts.

Belt table:

Code No.		Size	Belt	mm/rev.	Number of teeth
0	**4**	**60 (S)**	5M 25	80	16
0	**4**	**80 (S)**	5M 25	110	22
0	**9**	**100**	8M 48	144	18
0	**9**	**125**	8M 50	192	24

Shaft dimensions:

Size	Shaft ø h6 x length	Key
60 (S)	14 x 35	5x5x28
80 (S)	18 x 45	6x6x40
100	22 x 45	6x6x40
125	30 x 55	8x7x50

ELVZ	60	7	0	0	0	0	4	1	1500
	Pos.	1	2	3	4	5	6	7	

Basic length + stroke = total length

For combination kits and connecting elements refer to chapter 2.2

Sample ordering code:
ELVZ 60 right-/left-hand with belt connection right, standard body profile, standard carriage and 4 flush mounted shafts, 1040 mm stroke

ELZT BELT DRIVE UNIT

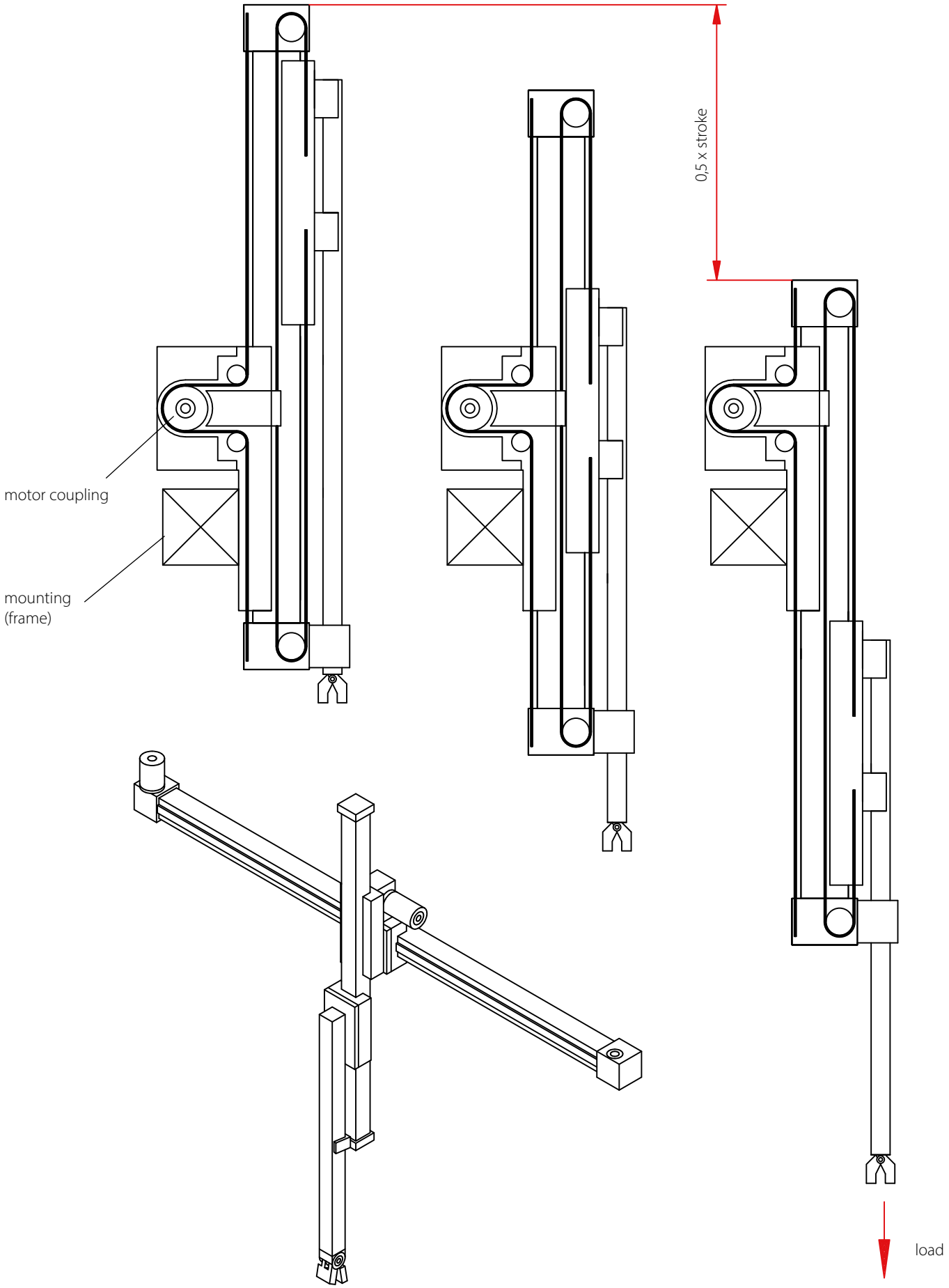

Linear system **ELFZ 60S, 80S, 100, 125**

BELT DRIVE

PULLEY PRINCIPLE
VERTICAL INSTALLATION POSITION

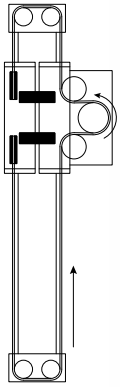

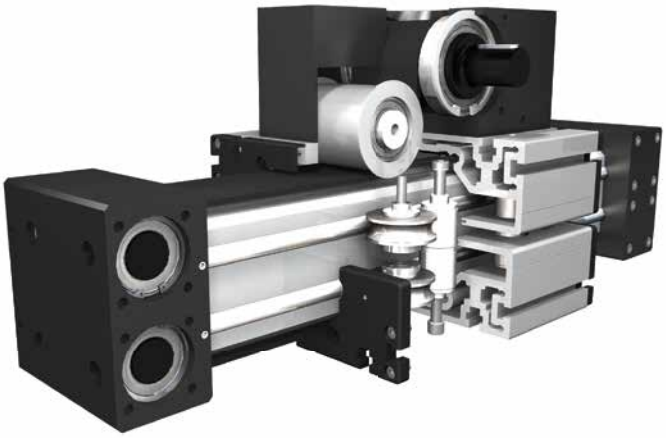

Function:
This special lifting unit consists of an aluminium square profile with hardened steel guide rods. The carriages, which have internal linear ball bearings that can be adjusted free of play, are driven along the guide rods by a timing belt. The rotating timing belt pulleys have maintenance-free ball bearings. One rotation of the drive pulley complies with 1/2 linear circumference of the drive pulley. Belt tension can be readjusted by a simple tensioning device in one of the carriages. This device can also be used for symmetrical adjustment of two or more linear units running parallel.

Fitting position: As required. Max. length without joints 6.000 mm.
Carriage mounting: By T-slots.
Unit mounting: By T-slots or tapped holes in the bearing blocks, or mounting sets.
Belt type: HTD with steel reinforcement, no backlash when changing direction, repeatability ± 0,1 mm.

Forces and torques

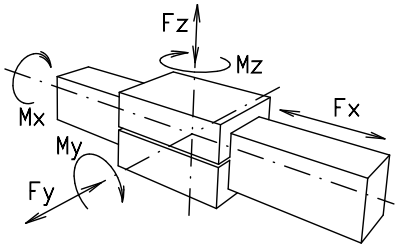

Size	ELFZ 60S		ELFZ 80S		ELFZ 100		ELFZ 125	
Forces/Torques	static	dynamic	static	dynamic	static	dynamic	static	dynamic
F_x (N)	3600	3200	6200	5400	8700	7600	12000	10400
F_y (N)	8200	6200	9200	7200	16000	13000	24000	18000
F_z (N)	4320	3200	6000	3600	7200	4400	12000	9000
M_x (Nm)	176	130	340	280	600	460	1200	900
M_y (Nm)	380	280	540	460	800	540	1500	1200
M_z (Nm)	460	340	600	440	1500	1000	2700	2300

All forces and torques relate to the following:

existing values / table values: $\frac{Fy}{Fy_{dyn}} + \frac{Fz}{Fz_{dyn}} + \frac{Mx}{Mx_{dyn}} + \frac{My}{My_{dyn}} + \frac{Mz}{Mz_{dyn}} \leq 1$

No-load torque				
Nm	1,3	1,5	2	2
Speed				
(m/s) max	4	4	4	4
Drive torque				
max (Nm)	48	120	386	500
Geometrical moments of inertia of aluminium profile				
I_x mm^4	6,79x10^5	1,89x10^6	4,44x10^6	10,15x10^6
I_y mm^4	6,9710^5	1,8910^6	4,48x10^6	10,15x10^6
E-Modulus N/mm^2	70000	70000	70000	70000

For life-time calculation of rollers use our homepage.

Driving torque:

$$M_a = \frac{F * P * S_i}{2000 * \pi * 2} + M_n$$

$$P_a = \frac{M_a * n}{9550}$$

F = force (N)
P = pulley action perimeter (mm)
Si = safety factor 1,2 … 2
M_n = no-load torque (Nm)
n = rpm pulley (min^{-1})
M_a = driving torque (Nm)
P_a = motor power (KW)

Deflection:

$$f = \frac{F * L^3}{E * I * 192}$$

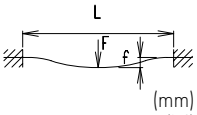

f = deflection (mm)
F = load (N)
L = free length (mm)
E = elastic modulus 70000 (N/mm^2)
I = second moment of area (mm^4)

Linear system **ELFZ 60S, 80S, 100, 125**

Dimensions (mm)

Functional principle on page 3.1 | 40

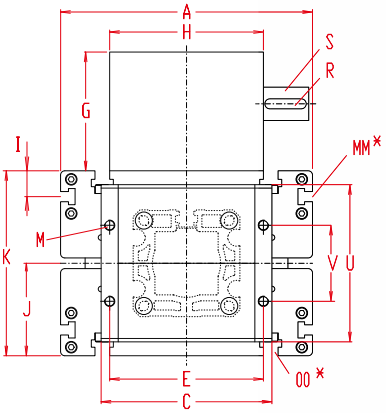

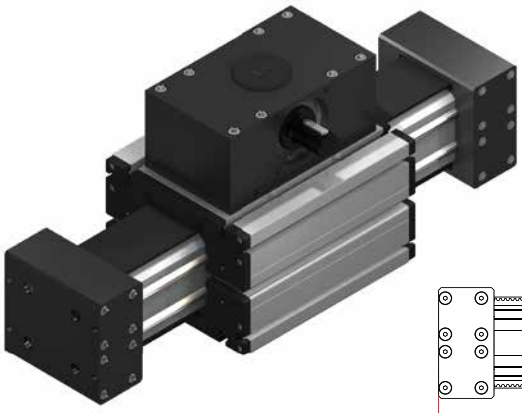

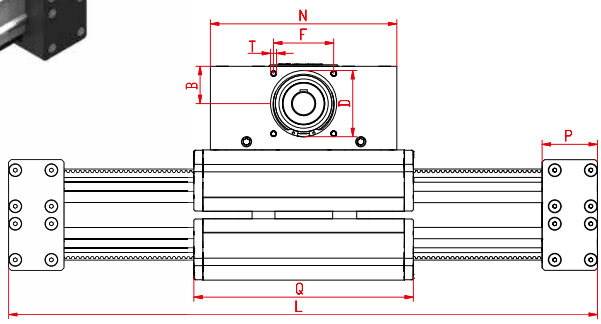

*For slide nuts refer to chapter 2.2 page 2

Increasing the carriage length will increase the basic length by the same amount.

Size ❒	Basic length L	A	B	C	D - 0,05	E	F	G	H	I	J	K	MM for	M	N	OO for	P	Q	R	S	T	U	V	Basic weight	Weight per 100 mm
ELFZ 60S	410	170	38	108	68	97	60	102	100	-	53	106	-	M8	180	M8	97	214	6x6x40	18x45	M8	97	60	23,1 kg	0,64 kg
ELFZ 80S	580	190	60	154	90	135	80	139	130	12,5	71	142	M6	M10	270	M 8	130	315	8x7x40	30x45	M10	130	70	51 kg	1,20 kg
ELFZ 100	530	230	62	170	110	150	100	143	160	29	89	178	M10	M10	310	M10	77	365	12x8x50	40x55	M10	150	80	69 kg	1,80 kg
ELFZ 125	560	295	62	200	110	180	100	139	180	30	107,5	215	M10	M12	310	M12	92	365	12x8x50	40x55	M10	186	89	87,5 kg	2,70 kg

0 **Choice of guide body profile:**
(0) Standard **(2)** corrosion-protected guide rods and screws
(4) expanded corrosion-protected version (depending on the availability of components)

0 **Choice of carriages:**

(0)

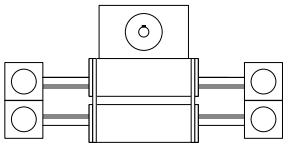

(1)

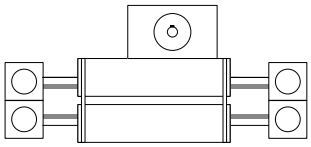

Size	Version 1	
	Q	L
60S	380	580
80S	489	750
100	575	740
125	640	830

1 **Drive version:**

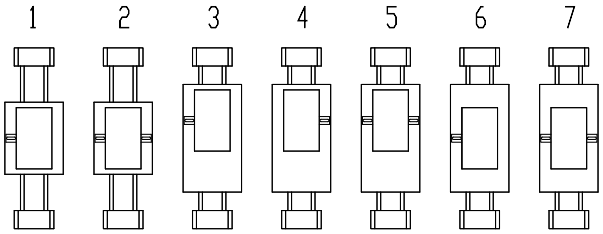

Belt table:

Code No.		Size	Belt	mm/rev. ≈ linear	Number of teeth
0	3	**60S**	8M30	192 ≈ 96	24
0	4	**80S**	8M50	256 ≈ 128	32
0	7	**100**	8M70	304 ≈ 152	38
0	9	**125**	8M100	304 ≈ 152	38

Shaft dimensions:

Size	Shaft ø h6 x length	Key
60S	18 x 45	6x6x40
80S	30 x 45	8x7x40
100	40 x 55	12x8x50
125	40 x 55	12x8x50

ELFZ	125	0	0	0	1	0	9	1	1500
	Pos.	1	2	3	4	5	6	7	

Basic length + stroke = total length

For combination kits and connecting elements refer to chapter 2.2

Sample ordering code:
ELFZ 125 with standard body profile, standard carriage, shaft Pos. 1, 940 mm stroke

Linear system **ELFZ** Ex **60S, 80S, 100, 125**

BELT DRIVE - EX GUIDE

- PULLEY PRINCIPLE
- VERTICAL INSTALLATION POSITION
- EX-GUIDE

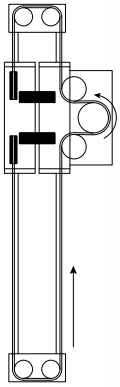

ATEX 2014/34/EU
Ex II 2G Ex h IIB T4 Gb
Ex II 3D Ex h IIIB T125 °C Dc

Function:
Special lifting system with roll guides outside of profile. System is driven by one rotating timing belt with one drive. The function corresponds to a simple pulley block. The positioning system is suitable for use according to the intended purpose in potentially explosive areas (see ATEX 95 marking). An operating manual is included in the scope of delivery. The system is certified for the following areas:

ATEX 2014/34/EU II 2G Ex h IIB T4 Gb:
All application areas except for underground mining. Gas atmosphere category 2, explosion protection category: protection due to secure construction (design security). Equipment group IIB. Temperature class T4=135 °C
ATEX 2014/34/EU II 3D Ex h IIIB T125 °C Dc:
All application areas except for underground mining. Dust atmosphere category 3. Maximum permissible surface temperature: 125 °C.

Fitting position: As required. Max. length without joints 3.000 mm.
Carriage mounting: By T-slots.
Unit mounting: By T-slots or tapped holes in the bearing blocks, or mounting sets.
Belt type: HTD with steel reinforcement, no backlash when changing direction, repeatability ± 0,1 mm.

Forces and torques

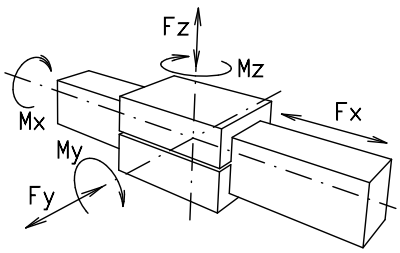

Size	ELFZex 60S		ELFZex 80S		ELFZex 100		ELFZex 125	
Forces/Torques	static	dynamic	static	dynamic	static	dynamic	static	dynamic
F_x (N)	1800	1550	3000	2600	4200	3650	6000	5200
F_y (N)	3820	3056	4438	3550	6200	4960	9960	7968
F_z (N)	1870	1496	1052	842	1292	1043	2190	1752
M_x (Nm)	104	82	134	108	202	162	440	352
M_y (Nm)	132	106	154	140	272	218	560	448
M_z (Nm)	274	220	364	292	652	520	1272	1018
All forces and torques relate to the following: existing values / table values $\frac{Fy}{Fy_{dyn}} + \frac{Fz}{Fz_{dyn}} + \frac{Mx}{Mx_{dyn}} + \frac{My}{My_{dyn}} + \frac{Mz}{Mz_{dyn}} \leq 1$								
No-load torque								
Nm	1,2		1,5		2		2	
Speed								
(m/s) max	1		1		1		1	
Drive torque								
max (Nm)	27		62		101		145	
Geometrical moments of inertia of aluminium profile								
I_x mm⁴	$6{,}79 \times 10^5$		$1{,}89 \times 10^6$		$4{,}44 \times 10^6$		$10{,}15 \times 10^6$	
I_y mm⁴	$6{,}97 \times 10^5$		$1{,}89 \times 10^6$		$4{,}48 \times 10^6$		$10{,}15 \times 10^6$	
E-Modulus N/mm²	70000		70000		70000		70000	

For life-time calculation of rollers use our homepage.

Driving torque:

$$M_a = \frac{F * P * S_i}{2000 * \pi * 2} + M_n$$

$$P_a = \frac{M_a * n}{9550}$$

F = force (N)
P = pulley action perimeter (mm)
Si = safety factor 1,2 … 2
M_n = no-load torque (Nm)
n = rpm pulley (min^{-1})
M_a = driving torque (Nm)
P_a = motor power (KW)

Deflection:

$$f = \frac{F * L^3}{E * I * 192}$$

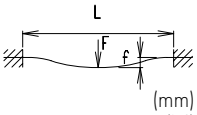

f = deflection (mm)
F = load (N)
L = free length (mm)
E = elastic modulus 70000 (N/mm²)
I = second moment of area (mm⁴)

Linear system **ELFZ** Ex **60S, 80S, 100, 125**

Dimensions (mm)

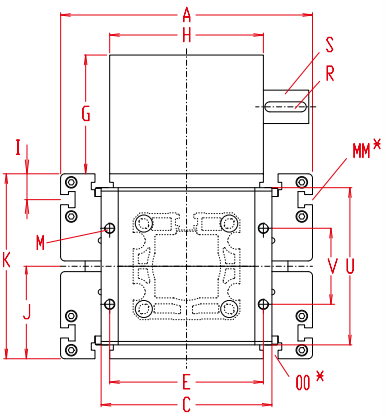

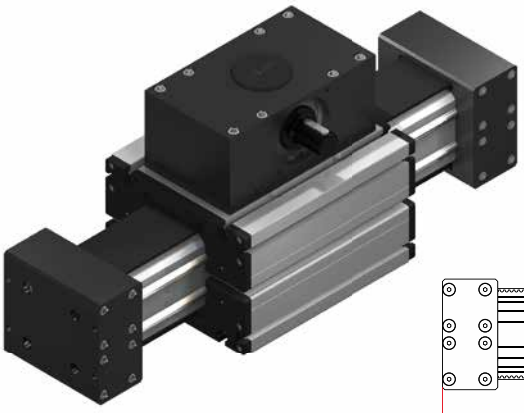

ATEX 2014/34/EU
Ex II 2G Ex h IIB T4 Gb
Ex II 3D Ex h IIIB T125 °C Dc

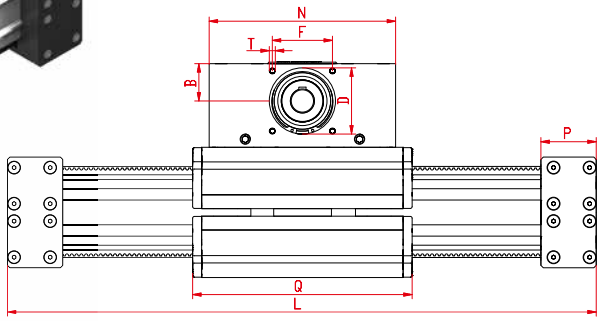

3.1

*For slide nuts refer to chapter 2.2 page 2

Increasing the carriage length will increase the basic length by the same amount.

Size ❒	Basic length L	A	B	C	D - 0,05	E	F	G	H	I	J	K	MM for	M	N	OO for	P	Q	R	S	T	U	V	Basic weight	Weight per 100 mm
ELFZex 60S	430	170	38	108	68	97	60	102	100	-	53	106	-	M8	180	M8	97	214	6x6x40	18x45	M8	97	60	23,2 kg	0,64 kg
ELFZex 80S	600	190	60	154	90	135	80	139	130	12,5	71	142	M6	M10	270	M 8	130	315	8x7x40	30x45	M10	130	70	51 kg	1,20 kg
ELFZex 100	560	230	62	170	110	150	100	143	160	29	89	178	M10	M10	310	M10	77	365	12x8x50	40x55	M10	150	80	69 kg	1,80 kg
ELFZex 125	590	295	62	200	110	180	100	139	180	30	107,5	215	M10	M12	310	M12	92	365	12x8x50	40x55	M10	186	89	87,5 kg	2,70 kg

0 **Choice of guide body profile:**
(0) Standard **(2)** corrosion-protected guide rods and screws

0 **Choice of carriages:**

(0) **(1)**

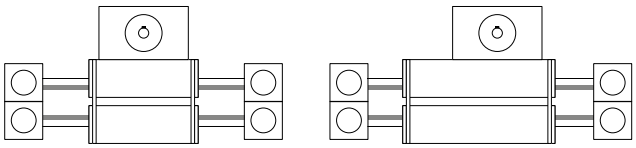

Size	Version 1	
	Q	L
60S	380	600
80S	489	770
100	575	770
125	640	860

1 **Drive version:**

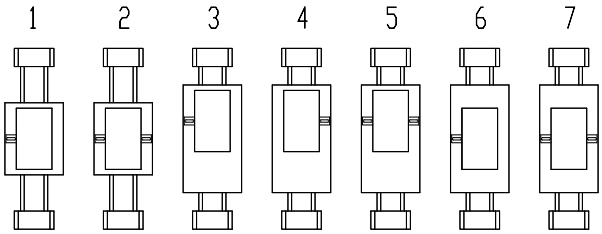

Belt table:

Code No.		Size	Belt	mm/rev. ≈ linear	Number of teeth
0	3	**60S**	8M30	192 ≈ 96	24
0	4	**80S**	8M50	256 ≈ 128	32
0	7	**100**	8M70	304 ≈ 152	38
0	9	**125**	8M100	304 ≈ 152	38

Shaft dimensions:

Size	Shaft ø h6 x length	Key
60S	18 x 45	6x6x40
80S	30 x 45	8x7x40
100	40 x 55	12x8x50
125	40 x 55	12x8x50

ELFZEX	125	0	0	0	1	0	9	1	1500
	Pos.	1	2	3	4	5	6	7	

Basic length + stroke = total length

For combination kits and connecting elements refer to chapter 2.2

Sample ordering code:
ELFZ 125 with standard body profile, standard carriage, shaft Pos. 1, 910 mm stroke

Linear system **ELZU 30, 40, 60, 60S, 80, 80S, 100**

SURFACE PORTAL

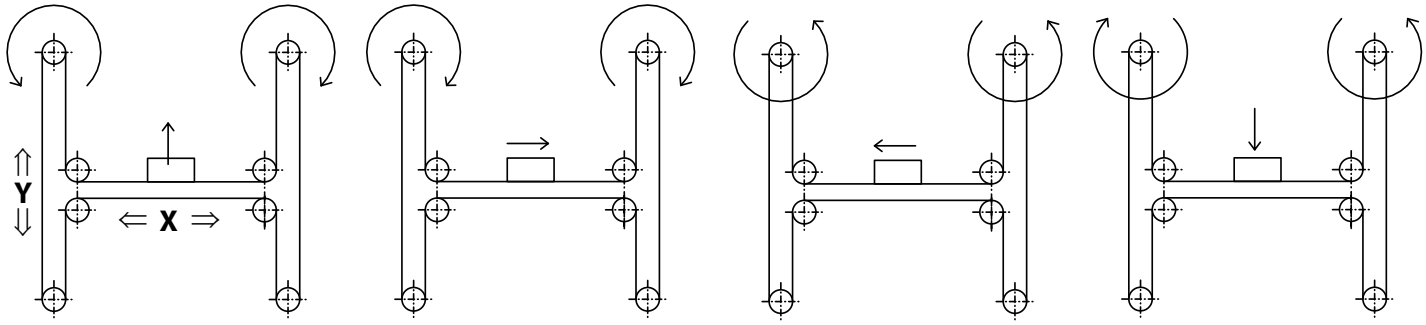

Function:
Surface portal, consisting of 2 Y-axes and 1 X-axis, driven by one rotating belt. This belt runs around different deflection pulleys. Positioning is achieved by two motors. The coordinate is diagonal to the deflection points of the Y-axis.
Advantage: Only small weights are moved, thus enabling high accelerations to be achieved.

Forces and torques

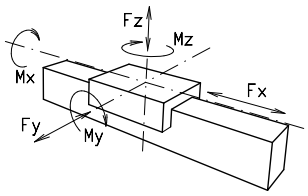

Fitting position: As required. Max. length and width 3.000 mm.
Carriage mounting: By T-slots.
Unit mounting: By T-slots or tapped holes in the bearing block, mounting sets.
Belt type: HTD with steel reinforcement, no backlash when changing direction, repeatability: ± 0,1 mm.

Size	ELZU 30		ELZU 40		ELZU 60		ELZU 60 S		ELZU 80		ELZU 80 S		ELZU 100	
Forces/Torques	static	dynamic	static	dynamic	static	dynamic	static	dynamic	static	dynamic	static	dynamic	static	dynamic
F_x (N)	200	180	390	350	894	800	894	800	1900	1800	1900	1800	4000	3800
F_y (N)	90	60	1200	700	3000	2000	4100	3100	3000	2000	4600	3600	8000	6500
F_z (N)	90	60	900	650	1700	1100	2160	1600	1700	1100	3000	1800	3600	2200
M_x (Nm)	10	5	25	20	67	43	88	65	90	55	170	140	300	230
M_y (Nm)	13	6	32	18	90	70	190	140	110	80	270	230	400	270
M_z (Nm)	14	7	35	25	120	100	230	170	150	120	300	220	750	500

All forces and torques relate to the following:

existing values / table values: $\frac{Fy}{Fy_{dyn}} + \frac{Fz}{Fz_{dyn}} + \frac{Mx}{Mx_{dyn}} + \frac{My}{My_{dyn}} + \frac{Mz}{Mz_{dyn}} \leq 1$

No-load torqe							
Nm	0,2	0,6	1,2	1,2	1,8	1,8	2,6
Speed							
(m/s) max	2	4	5	5	6	6	8
Tensile force							
permanent (N)	200	390	900	900	1900	1900	3600
0,2 s (N)	280	480	1000	1000	2090	2090	4000
Geometrical moments of inertia of aluminium profile							
I_x mm^4	$4{,}09 \times 10^4$	$1{,}32 \times 10^5$	$6{,}79 \times 10^5$	$6{,}79 \times 10^5$	$18{,}99 \times 10^5$	$18{,}99 \times 10^5$	$44{,}4 \times 10^5$
I_y mm^4	$4{,}00 \times 10^4$	$1{,}34 \times 10^5$	$6{,}97 \times 10^5$	$6{,}97 \times 10^5$	$18{,}97 \times 10^5$	$18{,}97 \times 10^5$	$44{,}8 \times 10^5$
E-Modulus N/mm^2	70000	70000	70000	70000	70000	70000	70000

For life-time calculation of rollers use our homepage.

Driving torque:

$$M_a = \frac{F * P * S_i}{2000 * \pi} + M_n$$

$$P_a = \frac{M_a * n}{9550}$$

F	= force	(N)
P	= pulley action perimeter	(mm)
Si	= safety factor 1,2 … 2	
M_n	= no-load torque	(Nm)
n	= rpm pulley	(min^{-1})
M_a	= driving torque	(Nm)
P_a	= motor power	(KW)

Deflection:

$$f = \frac{F * L^3}{E * I * 192}$$

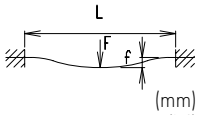

f	= deflection	(mm)
F	= load	(N)
L	= free length	(mm)
E	= elastic modulus 70000	(N/mm^2)
I	= second moment of area	(mm^4)

Linear system **ELZU 30, 40, 60, 60S, 80, 80S, 100**

Dimensions (mm)

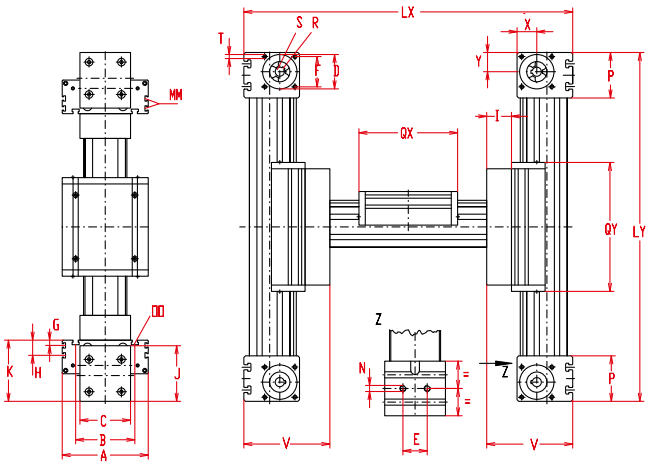

*For slide nuts refer to chapter 2.2 page 2

Size ❒	Basic length Lx	Basic length Ly	A	B	C	D - 0,05	E	F	G	H	I	J	K	MM for	N for	OO for	P	Qx	Qy	T	V	X	Y	Basic weight	Weight per 100 mm
ELZU 30	240	210	70	56	42	28	13	25	-	-	27	44	47	-	M 5	M 6	36	82	126	M 5	74	16	16	6,3 kg	0,13 kg
ELZU 40	304	250	100	66	58	37	18	32	-	-	26	58	64	-	M 6	M 6	49	122	147	M 5	90	20,5	20,5	6,8 kg	0,24 kg
ELZU 60	426	330	144	96	80	47	30	42	-	-	33	82	90	-	M 8	M 8	59	168	210	M 6	123	27	26	14,7 kg	0,62 kg
ELZU 60S	450	330	170	108	80	47	30	42	-	-	33	82	94	-	M 8	M 8	59	194	210	M 6	127	27	26	17,7 kg	0,62 kg
ELZU 80	535	435	170	117	100	68	40	60	10,5	30,5	44	110	121	M 6	M10	M10	90	194	244	M 8	165	39	38	31,0 kg	1,00 kg
ELZU 80S	555	455	190	126	100	68	40	60	12,5	30	44	110	122	M6	M10	M 8	90	214	264	M 8	166	39	38	32,0 kg	1,00 kg
ELZU 100	758	590	230	155	130	90	50	80	-	29	69	135	154	M10	M12	M10	110	300	360	M10	223	50	50	47,3 kg	1,40 kg

0 **Choice of guide body profile:**
(0) Standard **(2)** corrosion-protected guide rods and screws
(4) expanded corrosion-protected version (depending on the availability of components)

0 **Choice of carriages:**

(0)

(1)

(2)

Size	Version 1 Qx	Version 1 Lx	Version 1 Qy	Version 1 Ly	Version 2 Qx	Version 2 Lx	Version 2 Qy	Version 2 Ly
30	94	252	126	210	94	252	138	222
40	138	320	147	250	138	320	163	266
60	184	442	210	330	184	442	226	346
60S	214	468	210	330	214	468	230	350
80	210	551	244	435	210	551	260	451
80S	234	575	264	455	234	575	284	475
100	316	774	360	590	316	774	376	606

0 **Drive version:**

(0)

(1)

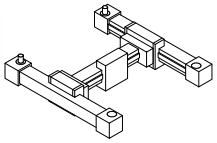

(2)

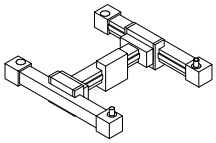

The standard version is supplied without shaft. A shaft can be retrofitted by inserting it into the pulley bore and securing it with 2 locking rings.

Belt table:

Code No.		Size	Belt	mm/rev.	Number of teeth
0	**1**	**30**	3M12	75	25
0	**3**	**40**	5M15	100	20
0	**4**	**60 (S)**	5M25	130	26
0	**7**	**80 (S)**	8M30	192	24
0	**9**	**100**	8M50	256	32

Shaft dimensions / Coupling claw:

Size	Shaft ø h6 x length	Key	Coupling
30	6 x 15	2x2x12	7
40	10 x 27	3x3x25	9
60 (S)	14 x 35	5x5x28	14
80 (S)	18 x 45	6x6x40	19
100	22 x 45	6x6x40	24

ELZU	60	7	0	0	0	0	4	1	1500

X-Axis Basic length + stroke = total length

Y-Axes Basic length + stroke = total length

ELZU	60	8	0	0	0	0	4	1	700
	Pos.	1	2	3	4	5	6	7	

For combination kits and connecting elements refer to chapter 2.2

Sample ordering code:
ELZU 60 with standard body profile, standard carriage, coupling claw on one side, stroke X = 1074 / Y = 370 mm

Linear system **ELZU 60 S W**

SURFACE PORTAL - STRENGTHENED CONSTRUCTION

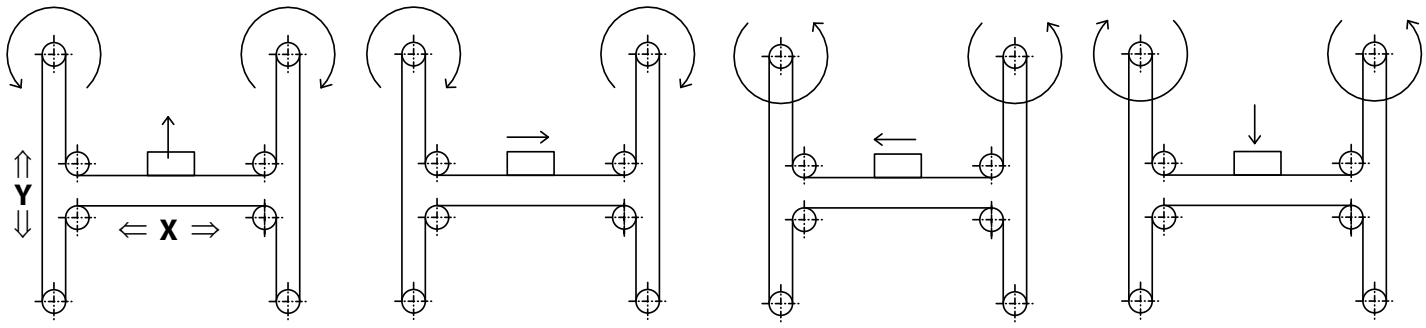

Function:
Surface gantry consisting of two Y axes and one X axis. The unit is driven by a rotating belt, which remains connected through various deflection points. Due to the rectangular profile high torques and loads can be taken up. In addition, a very high stability and low deflection are ensured for long axis systems. The belt tension can be easily readjusted via a tensioning device within the carriage. The movement is realised by two motors. The coordinate lies diagonal to the deflection points of the X axis. Advantage: Only small masses are moved and thus it is possible to achieve high accelerations.

Fitting position: As required. Max. length and width 3.000 mm.
Carriage mounting: By T-slots.
Unit mounting: By T-slots or tapped holes in the bearing block, mounting sets.
Belt type: HTD with steel reinforcement, no backlash when changing direction, repeatability: ± 0,1 mm.

Forces and torques

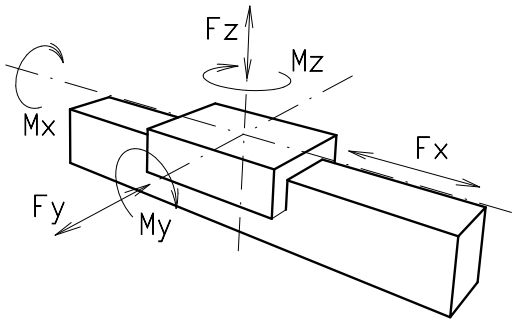

Size	60 S	
Forces/Torques	static	dynamic
F_x (N)	894	800
F_y (N)	4100	3100
F_z (N)	2160	1600
M_x (Nm)	88	65
M_y (Nm)	190	140
M_z (Nm)	230	170
All forces and torques relate to the following:		
existing values / table values	$\frac{Fy}{Fy_{dyn}} + \frac{Fz}{Fz_{dyn}} + \frac{Mx}{Mx_{dyn}} + \frac{My}{My_{dyn}} + \frac{Mz}{Mz_{dyn}} \leq 1$	
No-load torqe		
Nm	1,2	
Speed		
(m/s) max	5	
Tensile force		
permanent (N)	900	
0,2 s (N)	1000	
Geometrical moments of inertia of aluminium profile - Y-Axis		
I_x mm^4	6,79x10^5	
I_y mm^4	6,97x10^5	
E-Modul N/mm^2	70000	
Geometrical moments of inertia of aluminium profile - X-Axis		
I_x mm^4	2,8 x 10^6	
I_y mm^4	9,6 x 10^5	
E-Modulus N/mm^2	70000	

For life-time calculation of rollers use our homepage.

Driving torque:

$$M_a = \frac{F*P*S_i}{2000*\pi} + M_n$$

$$P_a = \frac{M_a*n}{9550}$$

F = force (N)
P = pulley action perimeter (mm)
Si = safety factor 1,2 … 2
M_n = no-load torque (Nm)
n = rpm pulley (min^{-1})
M_a = driving torque (Nm)
P_a = motor power (KW)

Deflection:

$$f = \frac{F*L^3}{E*I*192}$$

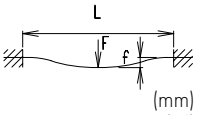

f = deflection (mm)
F = load (N)
L = free length (mm)
E = elastic modulus 70000 (N/mm^2)
I = second moment of area (mm^4)

Linear system **ELZU 60 S W**

Dimensions (mm)

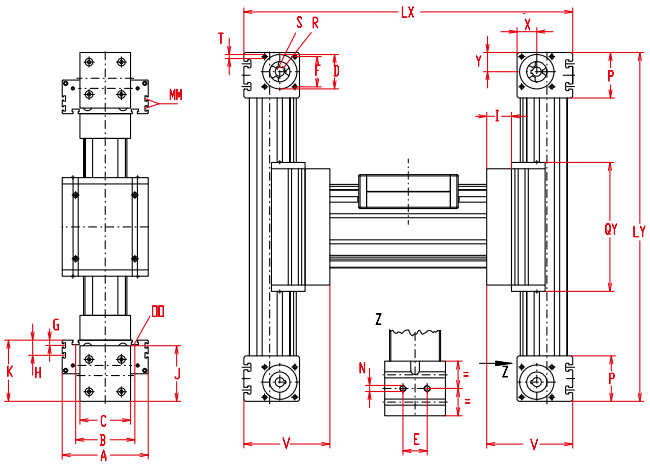

*For slide nuts refer to chapter 2.2 page 2

Size	Basic length		A	B	C	D - 0,05	E	F	I	J	K	N for	NN for	OO for	P	Qx	Qy	T	V	X	Y	Basic weight	Weight per 100 mm
	Lx	Ly																					
ELZU 60 S **W**	450	400	170	108	80	47	30	42	33	82	94	M 8	M5	M 8	59	194	280	M6	127	27	26	17,9 kg	0,9 kg

0 **Choice of guide body profile:**
(0) Standard **(2)** corrosion-protected guide rods and screws
(4) expanded corrosion-protected version (depending on the availability of components)

0 **Choice of carriages:**

(0)

(1)

(2)

Size	Version 1				Version 2			
	Qx	Lx	Qy	Ly	Qx	Lx	Qy	Ly
60 S	214	470	280	400	214	470	300	420

0 **Drive version:**

(0)

(1)

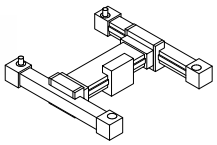

(2)

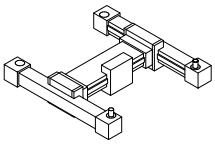

The standard version is supplied without shaft. A shaft can be retrofitted by inserting it into the pulley bore and securing it with 2 locking rings.

Belt table:

Code No.		Size	Belt	mm/rev.	Number of teeth
0	4	**60 S**	5M25	130	26

Shaft dimensions / Coupling claw:

Size	Shaft ø h6 x length	Key	Coupling
60 S	14 x 35	5x5x28	14

ELZU	**60S W**	**7**	**0**	**0**	**0**	**0**	**4**	**1**	**01500**
ELZU	**60S W**	**8**	**0**	**0**	**0**	**0**	**4**	**1**	**00700**
	Pos.	1	2	3	4	5	6	7	

X-Axis Basic length + stroke = total length
Y-Axes Basic length + stroke = total length

For combination kits and connecting elements refer to chapter 2.2

Sample ordering code:
ELZU 60S W, standard body profile, standard carriage, coupling claw on one side, stroke X = 1080 / Y = 298 mm

Linear system **ELZI 30, 40, 60**

X/Z - PORTAL

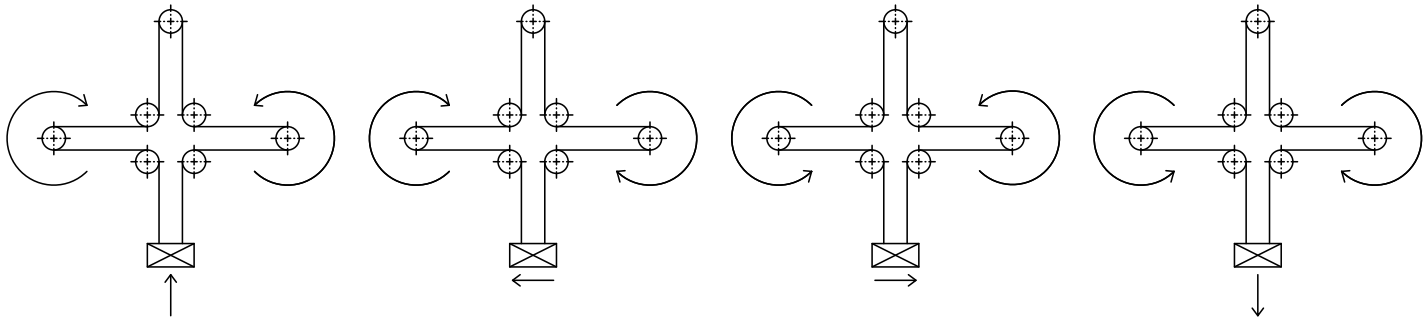

Function:
X/Z gantry consisting of a double guide in the horizontal X level and a vertical Z axis. The belt is fixed and tensioned at the load end. The unit is driven by a rotating belt, which remains connected through various deflection points. The movement is realised by two motors. The coordinate lies diagonal to the deflection points of the X axes and the Z axis. Advantage: Only small masses are moved and thus it is possible to achieve high accelerations.

Fitting position: As required, max. length for x-axes 2000mm, for z-axis 1000mm
Unit mounting: By tapped holes in the bearing block, mounting sets.
Belt type: HTD with steel reinforcement, no backlash when changing direction, repeatability: ± 0,1 mm.

Forces and torques

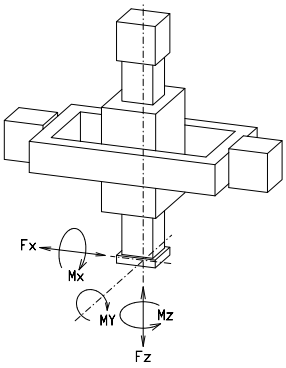

Size	ELZI 30		ELZI 40		ELZI 60	
Forces/torques	static	dynam.	static	dynam.	static	dynam.
F_x (N)	390	350	894	800	1900	1800
F_z (N)	180	160	1200	900	1600	1200
M_x (Nm)	15	9	25	20	67	43
M_y (Nm)	20	13	32	22	90	70
M_z (Nm)	23	18	35	25	120	100

All forces and torques relate to the following:

existing values / table values: $\frac{Fy}{Fy_{dyn}} + \frac{Fz}{Fz_{dyn}} + \frac{Mx}{Mx_{dyn}} + \frac{My}{My_{dyn}} + \frac{Mz}{Mz_{dyn}} \leq 1$

No-load torque horizontal movement			
Nm	2 x 0,4	2 x 0,6	2 x 1,1
Speed			
(m/s) max	2	4	5
Tensile force			
permanent (N)	390	894	1900
0,2 s (N)	480	1000	2090
Geometrical moments of inertia of aluminium profile			
I_x mm⁴ (X-/Z-Achse)	$0{,}31 \times 10^5$ / $0{,}41 \times 10^5$	$1{,}12 \times 10^5$ / $1{,}32 \times 10^5$	$4{,}06 \times 10^5$ / $6{,}79 \times 10^5$
I_y mm⁴ (X-/Z-Achse)	$1{,}70 \times 10^5$ / $0{,}40 \times 10^5$	$7{,}20 \times 10^5$ / $1{,}34 \times 10^5$	$24{,}3 \times 10^5$ / $6{,}97 \times 10^5$
E-Modulus N/mm²	70000	70000	70000

For life-time calculation of rollers use our homepage.

Driving torque:

$$M_a = \frac{F * P * S_i}{2000 * \pi} + M_n$$

$$P_a = \frac{M_a * n}{9550}$$

F = force (N)
P = pulley action perimeter (mm)
Si = safety factor 1,2 … 2
M_n = no-load torque (Nm)
n = rpm pulley (min^{-1})
M_a = driving torque (Nm)
P_a = motor power (KW)

Deflection:

$$f = \frac{F * L^3}{E * I * 192}$$

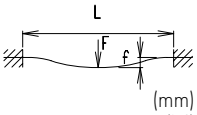

f = deflection (mm)
F = load (N)
L = free length (mm)
E = elastic modulus 70000 (N/mm²)
I = second moment of area (mm⁴)

Linear system **ELZI 30, 40, 60**

Dimensions (mm)

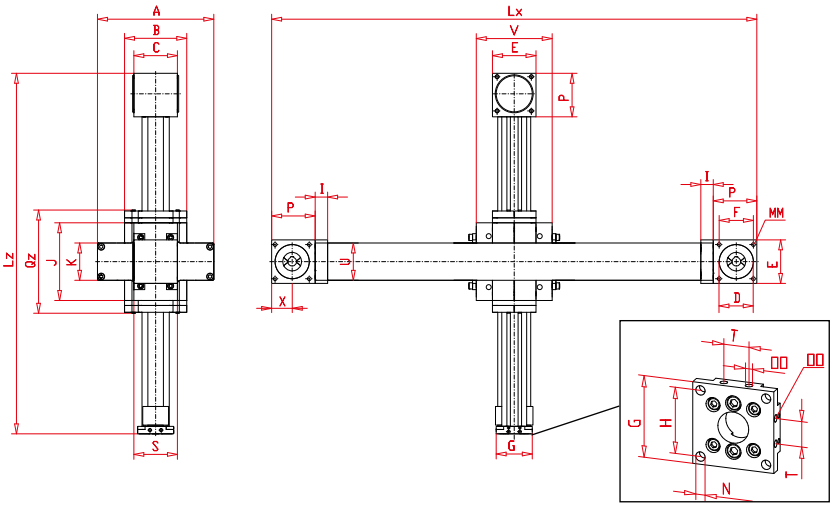

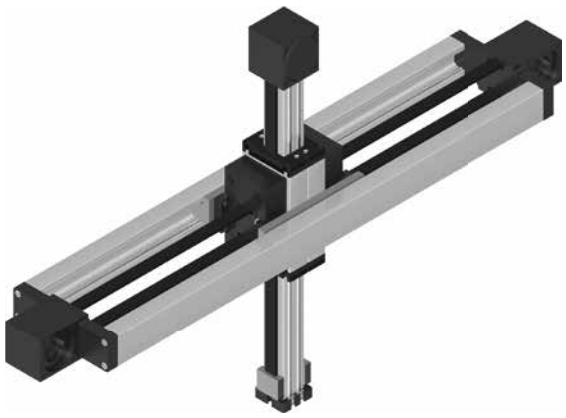

Endpiece for gripper

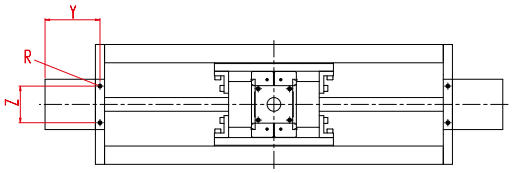

Size	X-Axis		Z-Axis	
	Profile	moving mass	Profile	moving mass
30	2 x UL40	4,5 kg	EL30	1,0 kg
40	2 x UL60	7,0 kg	EL40	2,4 kg
60	2 X UL80	19,0 kg	EL60	6,5 kg

Size ❒	Basic legth		A	B	C	D - 0,05	E	F	G	H	I	J	K	MM for	N Ø	OO for	P	Qz	R for	S	T	U	V	X	Y	Z	Basic weight	Weight per 100 mm X-/Z-axis
	Lx	Lz																										
ELZI 30	290	245	137	70	51	47	52	42	42	35	15	114	40	M6	4,2	M6	55	144	M6	60	-	40	112	26,5	62,5	35	5,20 kg	0,32/0,18 kg
ELZI 40	380	290	187	100	70	55	70	55	58	47	20	125	60	M6	6,6	M6	70	165	M8	70	18	60	122	33	80	50	11,5 kg	0,68/0,3 kg
ELZI 60	525	425	262	144	110	90	100	80	82	69	20	192	80	M10	8,5	M8	110	235	M10	100	30	80	198	50	120	80	33,0 kg	1,13/0,67 kg

0 **Choice of guide body profile:**
(0) Standard **(2)** corrosion-protected guide rods and screws
(4) expanded corrosion-protected version (depending on the availability of components)

0 **Drive version:**

(0) **(0)** **(1)** **(2)** **(3)** **(4)**

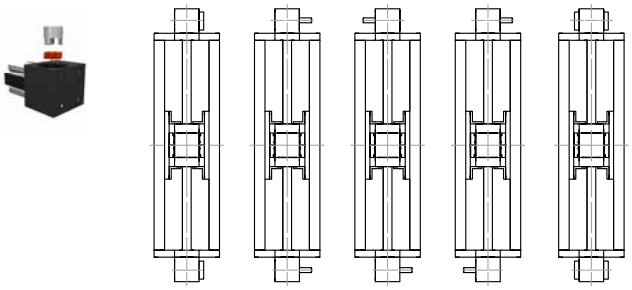

Belt table:

Code No.		Size	Belt	mm/rev.	Number of teeth
0	**3**	**30**	5M15	120	24
0	**4**	**40**	5M25	160	32
0	**6**	**60**	8M30	224	28

Shaft dimensions / Coupling claw:

Size	Shaft ø h6 x length	Key	Coupling
30	10x27	3x3x25	9
40	14x35	5x5x28	14
60	22x45	6x6x35	24

X-Axis Basic length + stroke = total length

Y-Axes Basic length + stroke = total length

ELZI	40	0	0	0	0	0	4	1	1500
ELZI	**40**	**1**	**0**	**0**	**0**	**0**	**4**	**1**	**700**
	Pos.	1	2	3	4	5	6	7	

Sample ordering code:
ELZI 40, with standard body profile, coupling claw on one side, stroke X = 1120 / Z = 410mm

Linear system **ELZI 60 SW**

X/Z - PORTAL - REINFORCED VERSION

- BELT DRIVE
- COMPACT DESIGN
- GRIPPER ADAPTATION
- HIGH SPEED

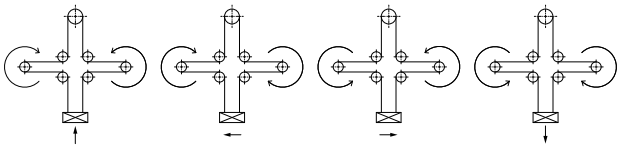

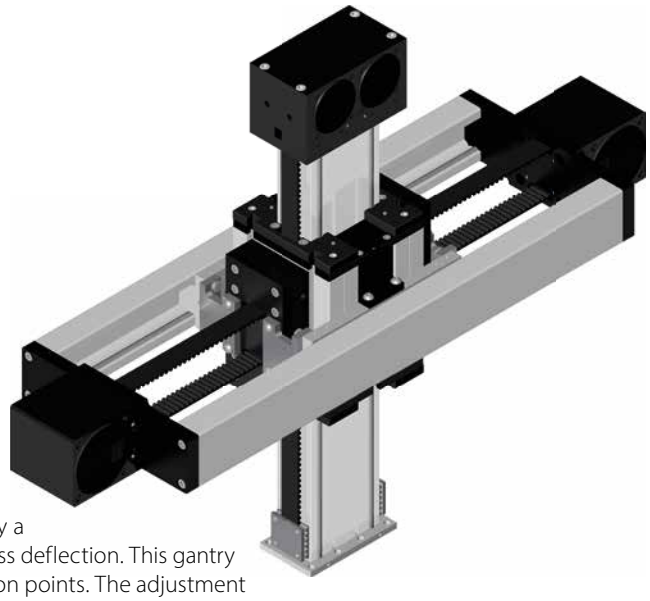

Function:
X/Y-gantry system that consists of a double guided X-axis and a vertical Z-axis. Compared to the ELZI series (standard version), the vertical Z-axis is reinforced by a rectangular profile, which absorbs higher torques, ensures greater stability and less deflection. This gantry system is driven by only one single timing belt that runs through various deflection points. The adjustment is realized by two motors whose coordinates are diagonally orientated to these deflection points.
Key advantageous: this compact design allows high accelerations due to low movable masses.

Fitting position: As required, max. length for x-axes 2000mm, for z-axis 2000mm
Unit mounting: By tapped holes in the bearing block, mounting sets.
Belt type: HTD with steel reinforcement, no backlash when changing direction, repeatability: ± 0,1 mm.

Forces and torques

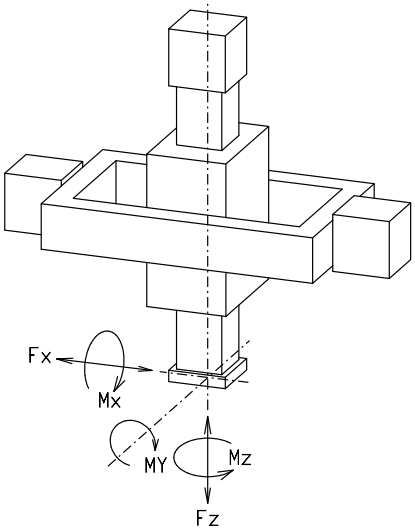

Size	60 S	
Forces/torques	static	dynam.
F_x (N)	1900	1800
F_z (N)	1600	1200
M_x (Nm)	67	43
M_y (Nm)	190	140
M_z (Nm)	230	170
All forces and torques relate to the following:		
existing values / table values	$\frac{Fy}{Fy_{dyn}} + \frac{Fz}{Fz_{dyn}} + \frac{Mx}{Mx_{dyn}} + \frac{My}{My_{dyn}} + \frac{Mz}{Mz_{dyn}} \leq 1$	
No-load torque horizontal movement		
Nm	2 x 1,1	
Speed		
(m/s) max	5	
Tensile force		
Dauer (N)	1900	
0,2 s (N)	2090	
Geometrical moments of inertia of aluminium profile		
I_x mm^4 (X-/Z-Achse)	$4{,}06 \times 10^5$ / $9{,}6 \times 10^5$	
I_y mm^4 (X-/Z-Achse)	$24{,}3 \times 10^5$ / $2{,}8 \times 10^6$	
E-Modul N/mm^2	70000	

For life-time calculation of rollers use our homepage.

Driving torque:

$$M_a = \frac{F * P * S_i}{2000 * \pi} + M_n$$

$$P_a = \frac{M_a * n}{9550}$$

F	= force	(N)
P	= pulley action perimeter	(mm)
Si	= safety factor 1,2 … 2	
M_n	= no-load torque	(Nm)
n	= rpm pulley	(min^{-1})
M_a	= driving torque	(Nm)
P_a	= motor power	(KW)

Deflection:

$$f = \frac{F * L^3}{E * I * 192}$$

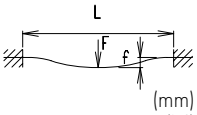

f	= deflection	(mm)
F	= load	(N)
L	= free length	(mm)
E	= elastic modulus 70000	(N/mm^2)
I	= second moment of area	(mm^4)

Linear system **ELZI 60 SW**

Dimensions (mm)

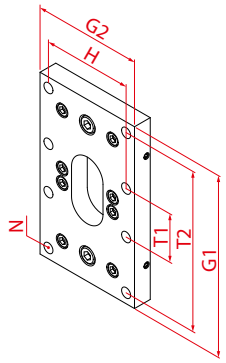

Endpiece for gripper

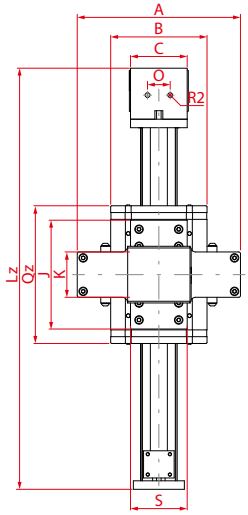

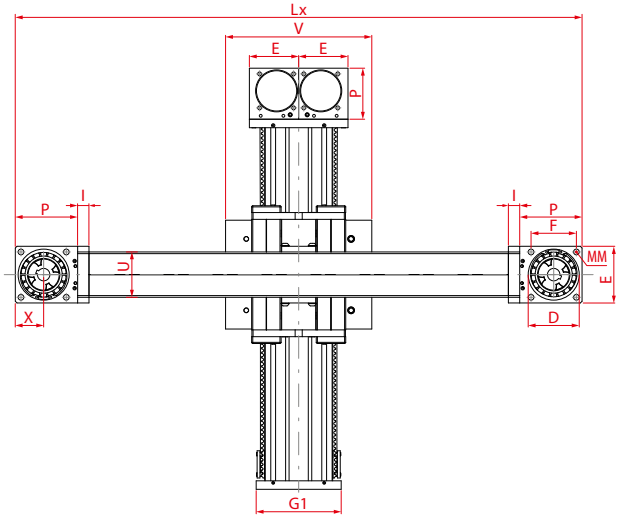

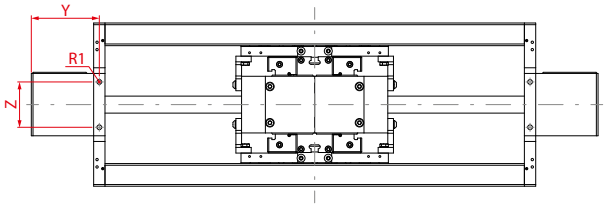

Size	G1	G2	H	N Ø	T1	T2
60 S	150	90	74	8,6	40	132

Size	X-Axis		Z-Axis	
	Profile	moving mass	Profile	moving mass
60 S	2x UL 80	26,3 kg	EL 60	11,7 kg

Size ❒	Basic legth		A	B	C	D - 0,05	E	F	I	J	K	MM for	O	P	Qz	R1	R2	S	U	V	X	Y	Z	Basic weight	Weight per 100 mm X-/Z-Achse
	Lx	Lz																							
ELZI 60 SW	550	420	288	170	100	90	100	80	20	195	80	M10	40	110	243	M10	M10	100	80	950	50	120	80	35 kg	1,15 kg / 0,85 kg

0 **Choice of guide body profile:**
(0) Standard **(2)** corrosion-protected guide rods and screws
(4) expanded corrosion-protected version (depending on the availability of components)

0 **Drive version:**

(0)

(0) **(1)** **(2)** **(3)** **(4)**

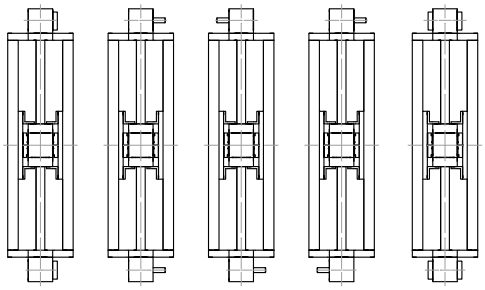

Belt table:

Code No.		Size	Belt	mm/rev.	Number of teeth
0	6	**60**	8M30	224	28

Shaft dimensions / Coupling claw:

Size	Shaft ø h6 x length	Key	Coupling
60 S	22x45	6x6x35	24

ELZI	60SW	0	0	0	0	0	6	1	1500

X-Achse Basic length + stroke = total length

ELZI	60SW	1	0	0	0	0	6	1	700

Z-Achse Basic length + stroke = total length

Pos. 1 2 3 4 5 6 7

Sample ordering code:
ELZI 60-SW, with standard body profile, standard carriage, coupling claw on one side, stroke X = 950 mm / Z = 280 mm

Operational principle ELFZ

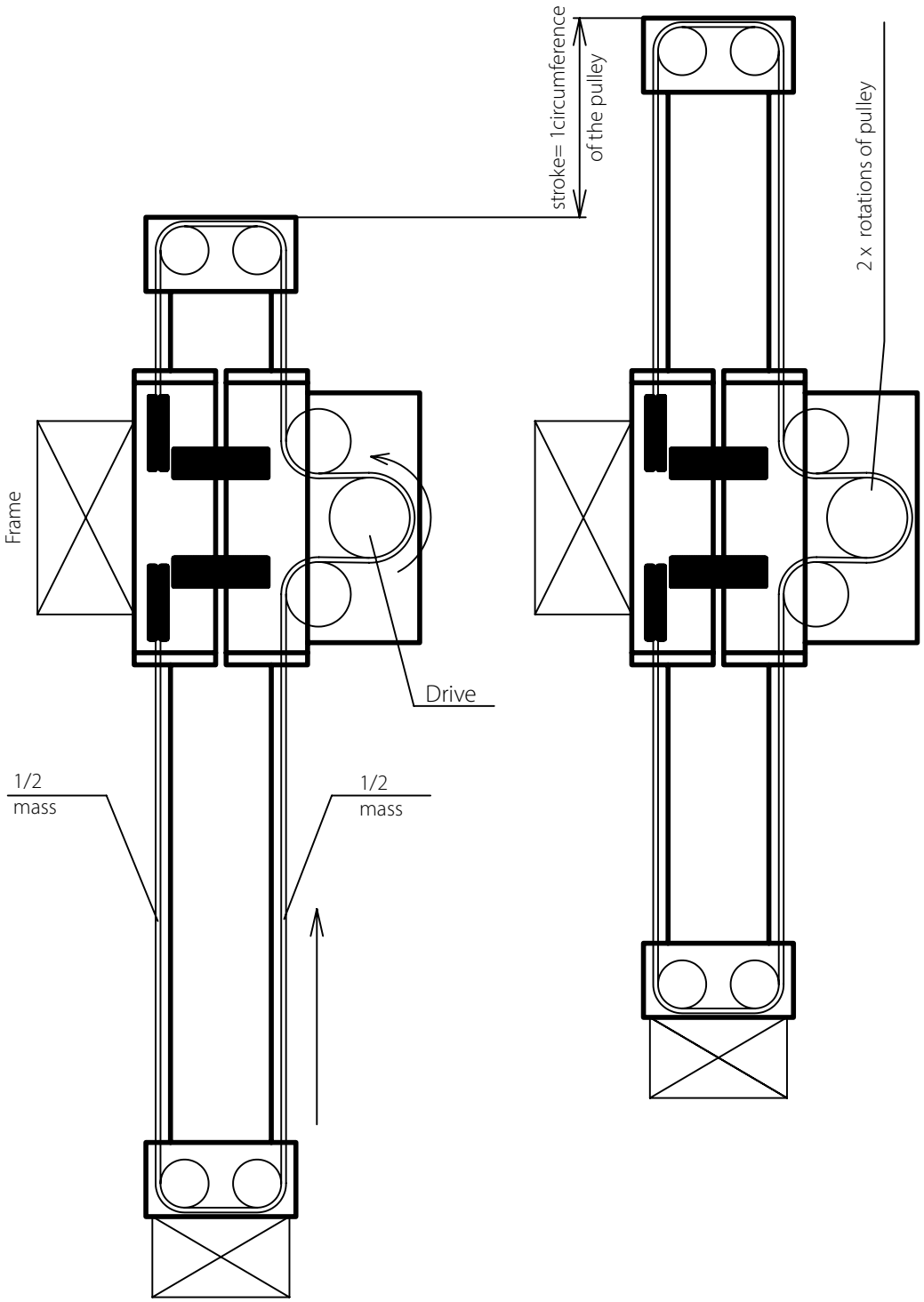

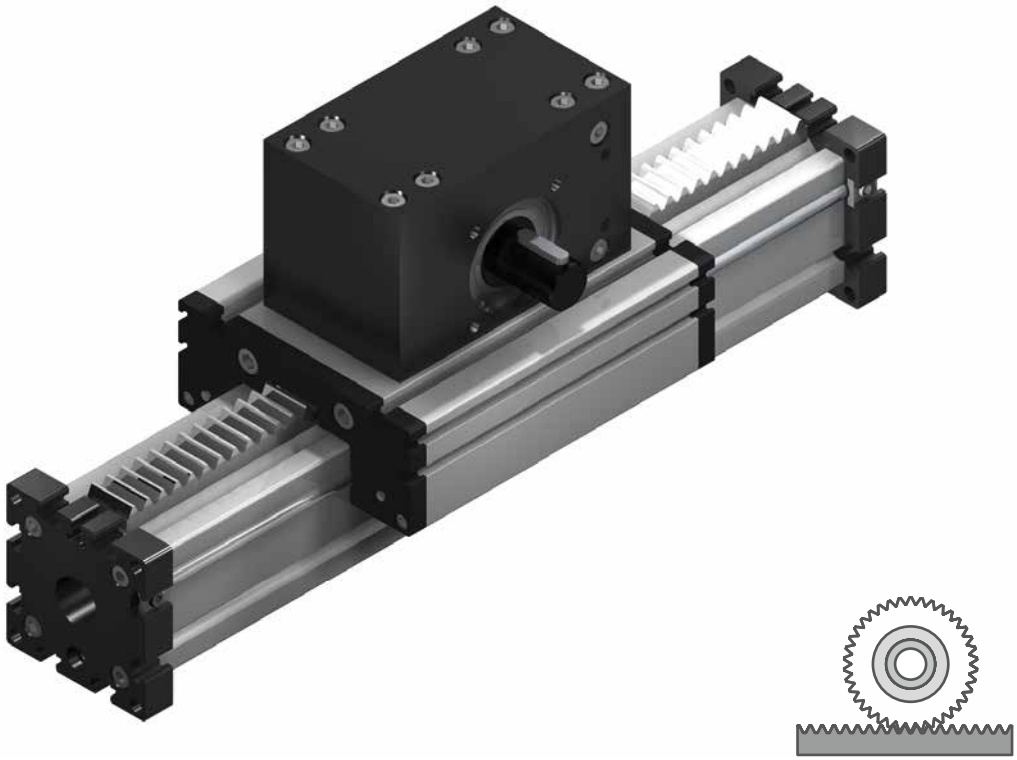

ELZA, ELDZA, ELZQ

with rack and pinion drive

Linear system **ELZA 40 / ELDZA 60, 60S, 80, 80S, 100**

RACK AND PINION DRIVE

- HIGH LOAD CAPACITY
- LONG TRAVERSE PATH >6000 MM
- LONG SERVICE LIFE
- HIGH OPERATIONAL RELIABILITY

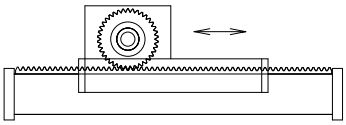

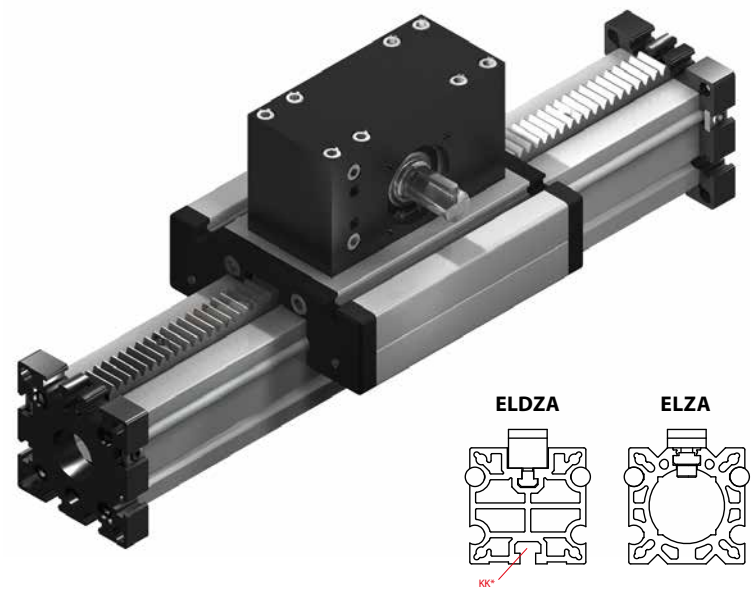

4.1

We have been implementing comprehensive model improvement measures so that we are able to offer our products in the segment of toothed rack drives in a more cost-effective and application-oriented way. New innovative guiding profiles ELDZA have been developed, which can be used effectively in combination with standardized toothed racks. Depending on the specific task (e. g. load, mounting position, service life or cost) it is possible to use different material combinations. With this series, multi-part assembled units with long strokes can be realized.

Function:
This unit consists of an aluminium square profile with integrated, hardened steel guide rods. The carriage, which has internal linear ball bearings that can be adjusted free of play, is driven by a rack and pinion. The pinion is equipped with maintenance-free ball bearings.

Fitting position: As required. Max. length without joints 6.000 mm.
Carriage mounting: By T-slots.
Unit mounting: By T-slots and holes in the bearing blocks, mounting sets.
Rack: C45,Steel 1.4305 or plastic (PA 6) possible. Repeatability: ± 0,2 mm.

Forces and torques

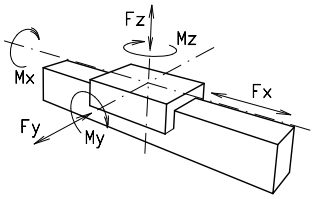

Size	ELZA 40		ELDZA 60		ELDZA 60 S		ELDZA 80		ELDZA 80 S		ELDZA 100	
Forces/Torques	static	dynamic	static	dynamic	static	dynamic	static	dynamic	static	dynamic	static	dynamic
F_x (N)	900	750	1500 *	1200 *	1500 *	1200 *	2200 *	1800 *	2200 *	1800 *	2900 *	2500 *
F_y (N)	1200	700	3000	2000	4100	3100	3000	2000	4600	3600	8000	6500
F_z (N)	900	650	1700	1100	2160	1600	1700	1100	3000	1800	3600	2200
M_x (Nm)	25	20	67	43	88	65	90	55	170	140	300	230
M_y (Nm)	32	18	90	70	190	140	110	80	270	230	400	270
M_z (Nm)	35	25	120	100	230	170	150	120	300	220	750	500
All forces and torques related to the following:												
existing values / table values	$\frac{Fy}{Fy_{dyn}} + \frac{Fz}{Fz_{dyn}} + \frac{Mx}{Mx_{dyn}} + \frac{My}{My_{dyn}} + \frac{Mz}{Mz_{dyn}} \leq 1$											
No-load torque												
Nm	0,4		0,6		0,8		1,0		1,5		1,7	
Speed												
(m/s) max	2		2,5		2,5		3		3		3	
Geometrical moments of inertia of aluminium profile												
I_x mm^4	$1{,}32 \times 10^5$		$4{,}86 \times 10^5$		$4{,}86 \times 10^5$		$18{,}99 \times 10^5$		$18{,}99 \times 10^5$		$44{,}4 \times 10^5$	
I_y mm^4	$1{,}34 \times 10^5$		$4{,}87 \times 10^5$		$4{,}87 \times 10^5$		$18{,}97 \times 10^5$		$18{,}97 \times 10^5$		$44{,}8 \times 10^5$	
E-Modulus N/mm^2	70000		70000		70000		70000		70000		70000	

** = Depending on materialcombinations Fx values could be different!*
For life-time calculation of rollers use our homepage.

Driving torque:

$$M_a = \frac{F * P * S_i}{2000 * \pi} + M_n$$

$$P_a = \frac{M_a * n}{9550}$$

F = force (N)
P = pulley action perimeter (mm)
Si = safety factor 1,2 … 2
M_n = no-load torque (Nm)
n = rpm pulley (min^{-1})
M_a = driving torque (Nm)
P_a = motor power (KW)

Deflection:

$$f = \frac{F * L^3}{E * I * 192}$$

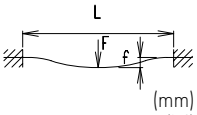

f = deflection (mm)
F = load (N)
L = free length (mm)
E = elastic modulus 70000 (N/mm²)
I = second moment of area (mm⁴)

Linear system **ELZA 40 / ELDZA 60, 60S, 80, 80S, 100**

Dimensions (mm)

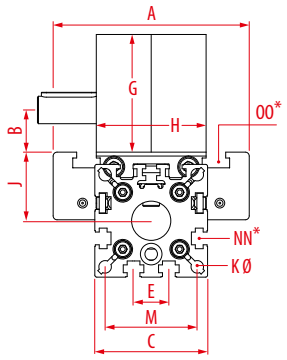

ELZA

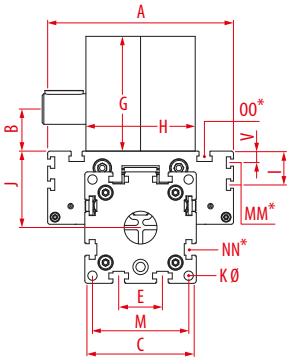

ELDZA

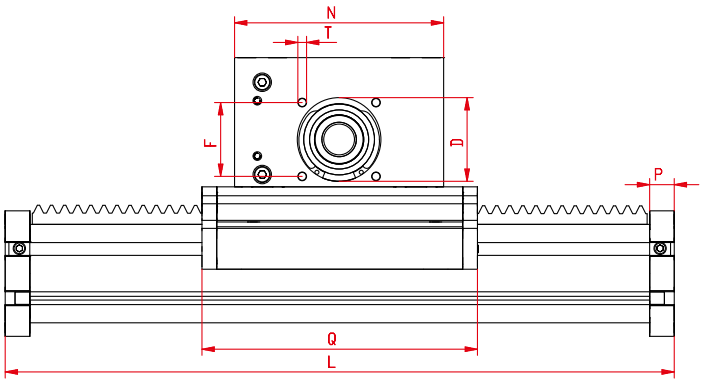

4.1

*For slide nuts refer to chapter 2.2 page 2

Increasing the carriage length will increase the basic length by the same amount.

Size ❒	Basic length L	A	B	C	D -0,05	E	F	G	H	I	J	K	KK for	M	MM for	N	NN for	OO for	P	Q	T	V	Basic weight
ELZA 40	150	100	21,5	58	37	18	32	60	56	-	35	6,5	-	47	-	100	M 6	M 6	12	122	M 6	-	2,0 kg
ELDZA 60	205	144	28,0	82	47	30	42	75	63	-	49	8,5	M 6	69	-	130	M 8	M 8	16	168	M 6	-	4,7 kg
ELDZA 60S	230	170	34,5	82	47	30	42	92	63	-	53	8,5	M 6	69	-	150	M 8	M 8	16	194	M 6	10	7,2 kg
ELDZA 80	240	170	39,0	102	68	40	60	105	100	30,5	70	8,5	-	88	M 6	170	M 10	M 10	20	194	M 8	10,5	11,9 kg
ELDZA 80S	260	190	39,0	102	68	40	60	105	100	30	71	8,5	-	88	M 6	170	M 10	M 8	20	214	M 8	12,5	12,9 kg
ELDZA 100	360	230	55,3	130	90	50	80	155	120	29	89	10,5	-	112	M 10	240	M 10	M 10	30	300	M 10	-	24,0 kg

0 **Choice of guide body profile:**
(0) Standard
(2) corrosion-protected guide rods and screws *(Version 0 and 2)*
(4) expanded corrosion-protected version *(Version 1 and 3)*
(depending on the availability of components)

ELZA 40		0,35 kg / 100 mm
ELDZA 60	Polyamide rack	0,56 kg / 100 mm
ELDZA 60	Steel rack	0,78 kg / 100 mm
ELDZA 80	Polyamide rack	0,95 kg / 100 mm
ELDZA 80	Steel rack	1,48 kg / 100 mm
ELDZA 100	Polyamide rack	1,48 kg / 100 mm
ELDZA 100	Steel rack	1,99 kg / 100 mm

0 **Choice of carriages:**

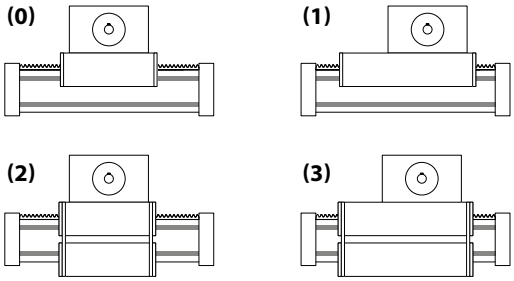

Size	Version 1		Version 2		Version 3	
	Q	L	Q	L	Q	L
40	227	255	138	166	243	271
60	303	340	184	221	319	356
60S	349	386	214	251	369	406
80	369	415	210	256	385	431
80S	389	435	234	280	409	455
100	505	565	316	376	521	581

For combination kits and connecting elements refer to chapter 2.2

1 **Drive version:**

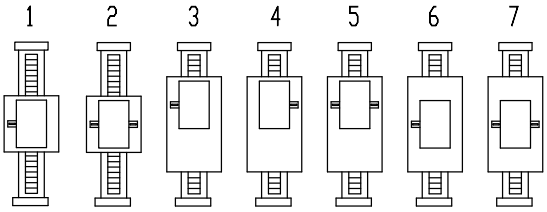

Size	Shaft ø h6 x length	Key	Pinion	
			mm/rev.	Modul
40	14 x 30	5x5x28	188,5	1,5
60	18 x 30	6x6x28	251,3	2
60 S	18 x 30	6x6x28	314,2	2
80 (S)	28 x 40	8x7x35	358,0	3
100	28 x 40	8x7x35	508,9	3

0 **Rack/Pinion Version:** *(ONLY for ELDZA)*

Version	0	1	2	3
Material Rack/Pinion	Steel/Plastic (Standard)	Stainless steel/Plastic	Plastic/Steel	Plastic/Stainless steel

Version 0/1

Version 2/3

ELDZA	60	0	0	0	1	0	3	0	1500
	Pos.	1	2	3	4	5	6	7	

Basic length + stroke = total length

Sample ordering code:
ELDZA 60 with standard body profile, standard carriage, standard shaft , steelpinion, 1295 mm stroke

Linear system **ELZQ 60, 80, 80S**

RACK AND PINION DRIVE

- HIGH LOAD CAPACITY
- HIGH RIGIDITY
- LIFTING SYSTEM
- HIGH OPERATIONAL RELIABILIT

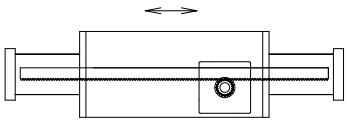

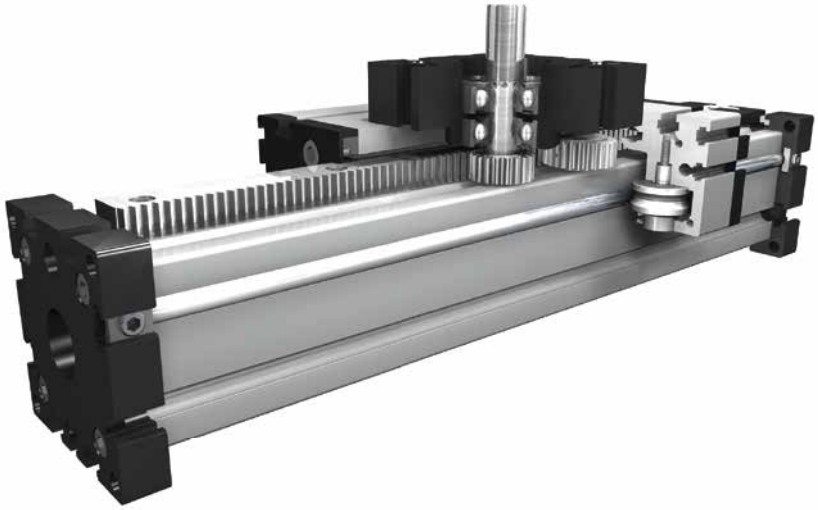

Function:
This unit consists of an aluminium square profile with integrated, hardened steel guide rods. The carriage, which has internal linear ball bearings that can be adjusted free of play, is driven along the guide rods by a high precision rack. The rack and pinion system is suitable for highly dynamic servo operation and ideal for lifting movements. The pinion has maintenance-free ball bearings. The rack is lubricated by a toothed felt wheel.

Fitting position: As required. Max. length without joints 6.000 mm.
Carriage mounting: By T-slots.
Unit mounting: By T-slots and holes in the bearing block, mounting sets.
Rack: Cf53, h7 = finely toothed, h6 (hardened and ground, finely toothed). Repeatability: ± 0,1 mm.

Forces and torques

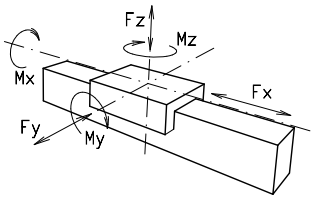

Size	ELZQ 60 h6		ELZQ 60 h7		ELZQ 80 h6		ELZQ 80 h7		ELZQ 80S h6		ELZQ 80S h7	
Forces/Torques	static	dynamic	static	dynamic	static	dynamic	static	dynamic	static	dynamic	static	dynamic
F_x (N)	1800	1400	940	780	1800	1400	940	780	1800	1400	940	780
F_y (N)	3000	2000	3000	2000	3000	2000	3000	2000	4600	3600	4600	3600
F_z (N)	1700	1100	1700	1100	1700	1100	1700	1100	3000	1800	3000	1800
M_x (Nm)	67	43	67	43	90	55	90	55	170	140	170	140
M_y (Nm)	90	70	90	70	110	80	110	80	270	230	270	230
M_z (Nm)	120	100	120	100	150	120	150	120	300	220	300	220

All forces and torques related to the following:

existing values / table values: $\frac{Fy}{Fy_{dyn}} + \frac{Fz}{Fz_{dyn}} + \frac{Mx}{Mx_{dyn}} + \frac{My}{My_{dyn}} + \frac{Mz}{Mz_{dyn}} \leq 1$

No-load torque						
Nm	0,6	0,6	1,0	1,0	1,5	1,5
Speed						
(m/s) max	4	4	4	4	4	4
Geometrical moments of inertia of aluminium profile						
I_x mm^4	6,79x10^5	6,79x10^5	18,99x10^5	18,99x10^5	18,99x10^5	18,99x10^5
I_y mm^4	6,97x10^5	6,97x10^5	18,97x10^5	18,97x10^5	18,97x10^5	18,97x10^5
E-Modulus N/mm^2	70000	70000	70000	70000	70000	70000

For life-time calculation of rollers use our homepage.

Driving torque:

$$M_a = \frac{F * P * S_i}{2000 * \pi} + M_n$$

$$P_a = \frac{M_a * n}{9550}$$

F = force (N)
P = pulley action perimeter (mm)
Si = safety factor 1,2 … 2
M_n = no-load torque (Nm)
n = rpm pulley (min^{-1})
M_a = driving torque (Nm)
P_a = motor power (KW)

Deflection:

$$f = \frac{F * L^3}{E * I * 192}$$

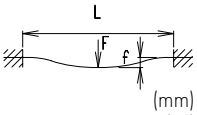

f = deflection (mm)
F = load (N)
L = free length (mm)
E = elastic modulus 70000 (N/mm^2)
I = second moment of area (mm^4)

Linear system **ELZQ 60, 80, 80S**

Dimensions (mm)

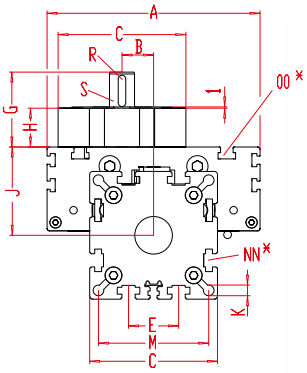

ELZQ 80(S)

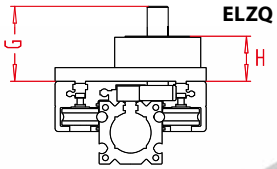

ELZQ 60

Size 60 with mounting plate on carriage.

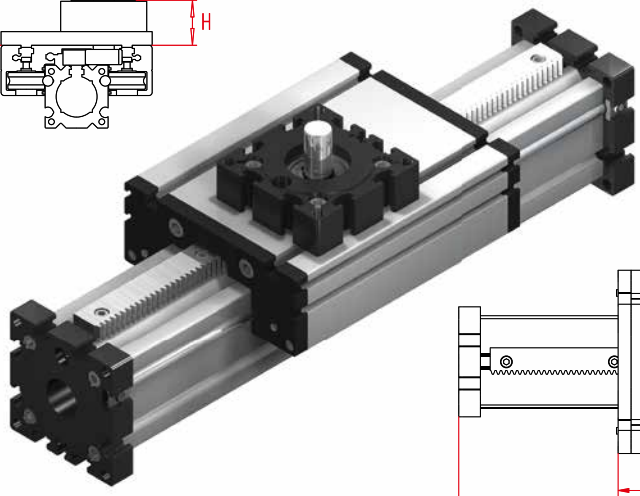

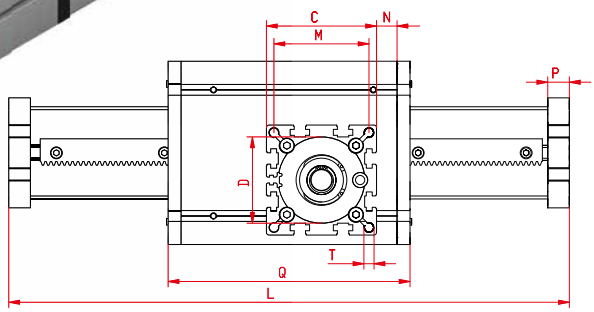

*For slide nuts refer to chapter 2.2 page 2

Increasing the carriage length will increase the basic length by the same amount.

Size ❒	Basic length L	A	B	C	D Ø ±0,05	E	G	H	J	K	M	N	NN for	OO for	P	Q	T	Basic weight	Weight per 100 mm
ELZQ 60	230	144	28,83	82	62	30	71,5	42	49	8,5	69	19	M 8	M 8	16	194	M 10	5,0 kg	0,68 kg
ELZQ 80	260	170	28,83	102	80	40	60,5	31	70	8,5	88	25	M 10	M 10	20	214	M 10	11,0 kg	1,19 kg
ELZQ 80S	280	190	28,83	102	80	40	60,5	31	71	8,5	88	13	M 10	M 8	20	234	M 10	12,0 Kg	1,19 kg

0 **Choice of guide body profile:**
(0) Standard **(2)** corrosion-protected guide rods and screws
(4) expanded corrosion-protected version (depending on the availability of components)

0 **Choice of carriages:**

(0)

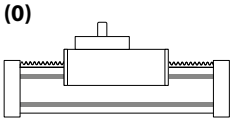

(1)

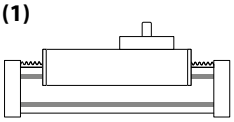

(2)

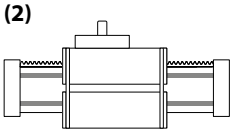

(3)

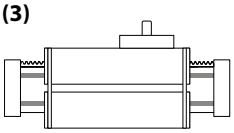

Size	Version 1		Version 2		Version 3	
	Q	L	Q	L	Q	L
60	338	374	210	246	354	390
80	384	430	230	276	400	446
80S	404	450	254	300	420	466

1 **Drive version:**

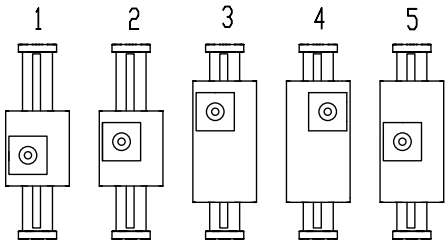

Size	Shaft ø h6 x length	Key	Pinion	
			mm/rev.	Modul
60	20 x 29,5	6x6x25	100	1,6
80 (S)	20 x 29,5	6x6x25	100	1,6

0 **Rack and pinion accuracy:**
(0) h7 (standard)

ELZQ	60	0	0	0	1	0	2	0	1500
Pos.		1	2	3	4	5	6	7	

Basic length + stroke = total length

For combination kits and connecting elements refer to chapter 2.2

Sample ordering code:
ELZQ 60 with standard body profile, standard carriage, position of drive 1, rack and pinion accuracy class h7, 1270 mm stroke

BAHR Modultechnik
EDELSTAHL Rost frei
TÜV NORD
AEO

Example for ELZA

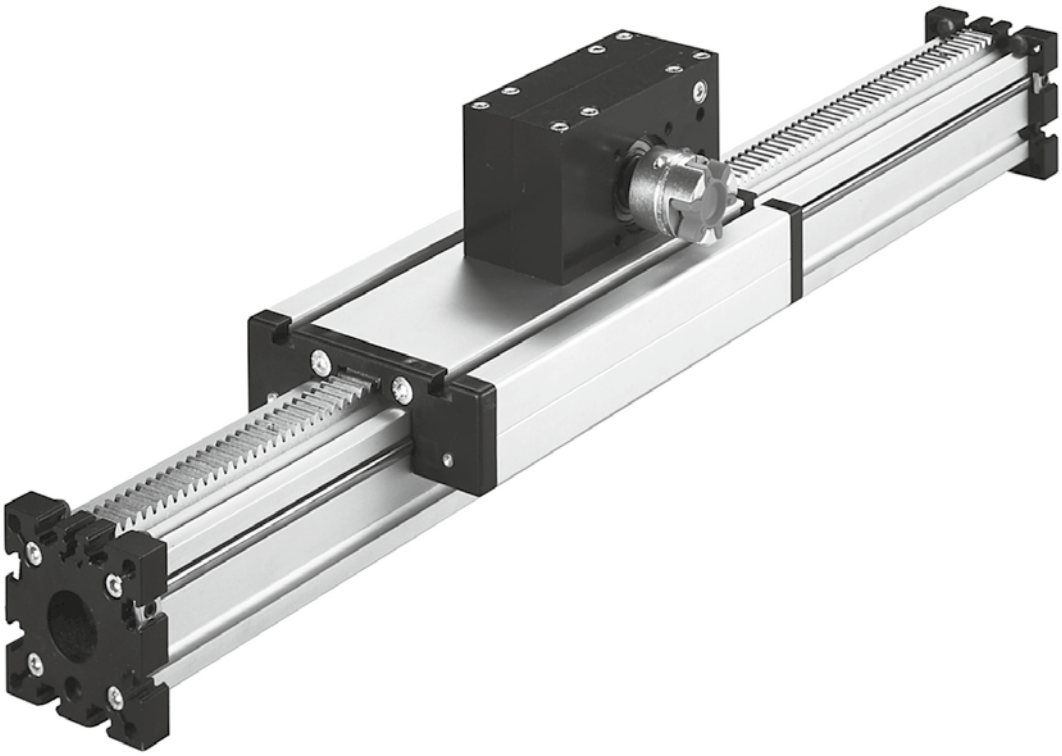

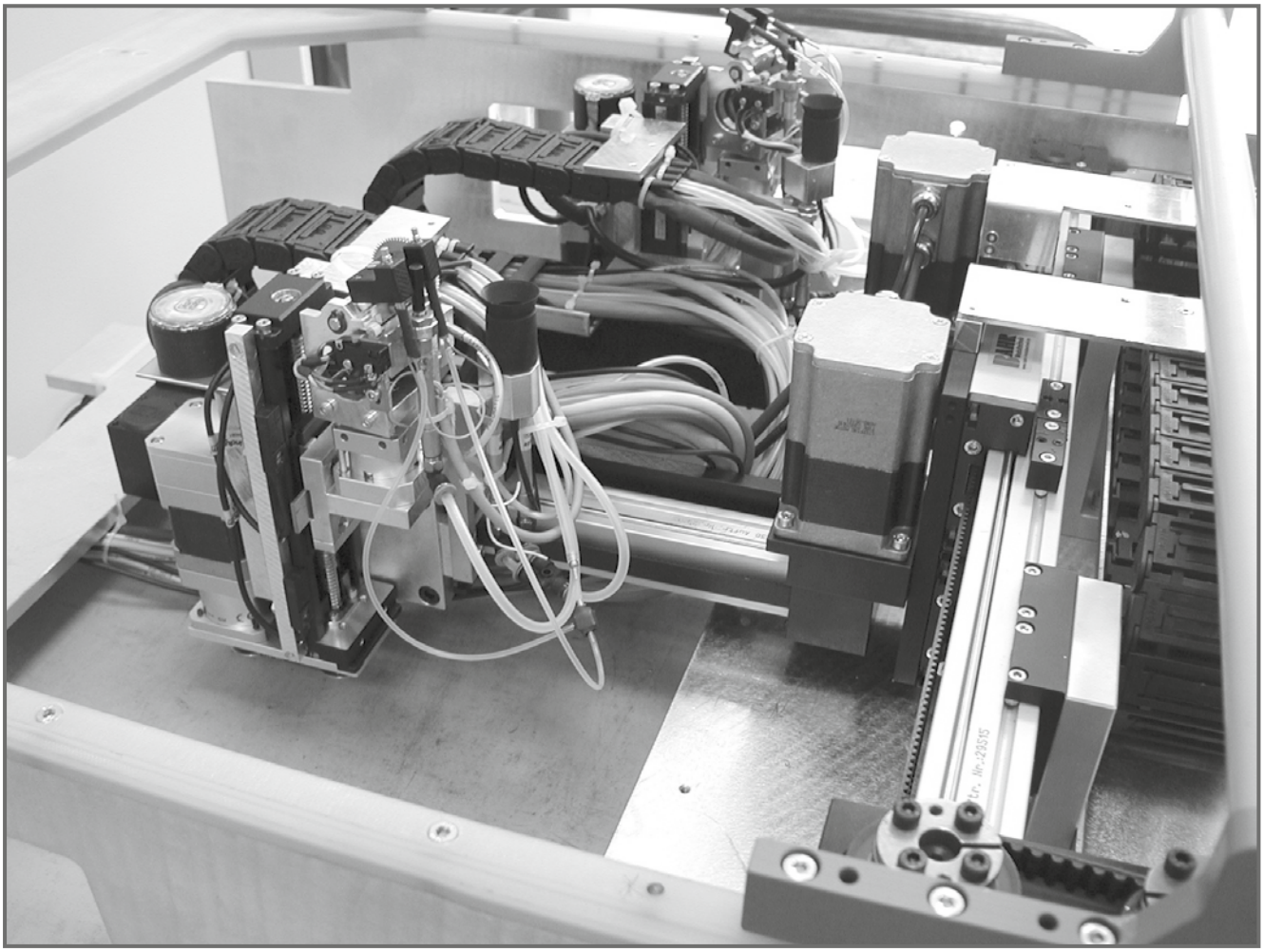

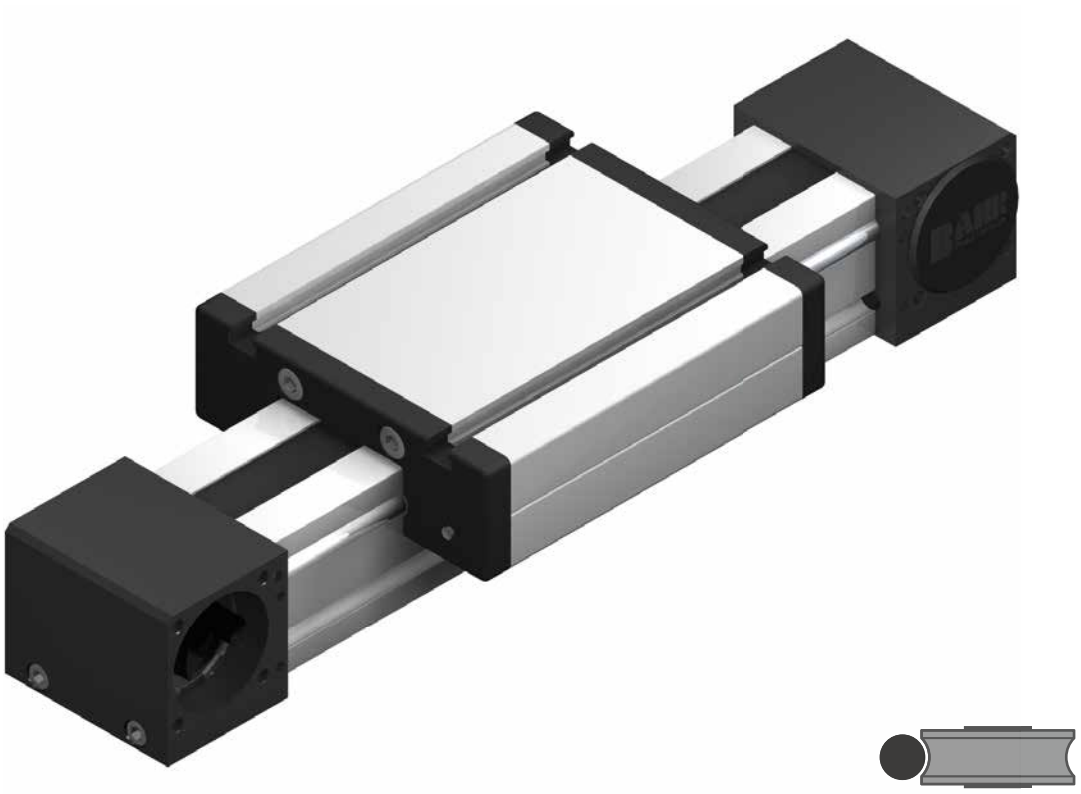

ML
belt driven

Linear system **MLZ 60, 60S, 80, 80S, 100**

BELT DRIVE

- INDEPENDENT INSTALLATION POSITION
- UNIVERSAL SYSTEM
- LONG TRAVERSE PATH >6000 MM

5.1

Function:
This linear unit consists of an aluminium square profile with integrated, hardened steel guide rods. The carriage, which has internal linear ball bearings, that can be adjusted free of play, is driven along the guide rods by a timing belt. The advantage of this system is that the belt is guided within the profile, ensuring that the belt is always tight and thus enabling the system to be operated e.g. when lying on its side. The pulleys have maintenance-free ball bearings. Belt tension can be readjusted by a simple screw adjustment device in the carriage. This device can also be used for symmetrical adjustment of two or more linear units running parallel. With this series, multi-part assembled units with long strokes can be realized.

Fitting position: As required, max. length 6.000 mm without joints.
Carriage mounting: By T-slots.
Unit mounting: By T-slots or tapped holes in the bearing block, mounting sets.
Belt type: HTD with steel reinforcement, no backlash when changing direction, repeatability: ± 0,1 mm.

Forces and torques

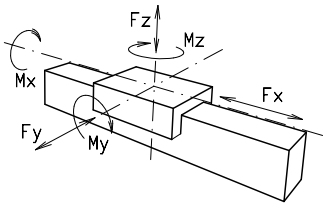

Size	MLZ 60		MLZ 60 S		MLZ 80		MLZ 80 S		MLZ 100	
Forces/Torques	static	dynamic	static	dynamic	static	dynamic	static	dynamic	static	dynamic
F_x (N)	894	800	894	800	1900	1800	1900	1800	4000	3800
F_y (N)	3000	2000	4100	3100	3000	2000	4600	3600	8000	6500
F_z (N)	1700	1100	2160	1600	1700	1100	3000	1800	3600	2200
M_x (Nm)	67	43	88	65	90	55	170	140	300	230
M_y (Nm)	90	70	190	140	110	80	270	230	400	270
M_z (Nm)	120	100	230	170	150	120	300	220	750	500

All forces and torques relate to the following:

existing values / table values: $\frac{Fy}{Fy_{dyn}} + \frac{Fz}{Fz_{dyn}} + \frac{Mx}{Mx_{dyn}} + \frac{My}{My_{dyn}} + \frac{Mz}{Mz_{dyn}} \leq 1$

No-load torque					
Nm	0,6	0,7	0,9	1,2	1,4
Speed					
(m/s) max	5	7	6	8	10
Tensile force					
permanent (N)	900	900	1900	1900	4000
0,2 s (N)	1000	1000	2090	2090	4300
Geometrical moments of inertia of aluminium profile					
I_x mm^4	$4{,}83 \times 10^5$	$4{,}83 \times 10^5$	$17{,}49 \times 10^5$	$17{,}49 \times 10^5$	$39{,}4 \times 10^5$
I_y mm^4	$5{,}03 \times 10^5$	$5{,}03 \times 10^5$	$18{,}02 \times 10^5$	$18{,}02 \times 10^5$	$43{,}5 \times 10^5$
E-Modulus N/mm^2	70000	70000	70000	70000	70000

For life-time calculation of rollers use our homepage.

Driving torque:

$$M_a = \frac{F * P * S_i}{2000 * \pi} + M_n$$

$$P_a = \frac{M_a * n}{9550}$$

F	= force	(N)
P	= pulley action perimeter	(mm)
Si	= safety factor 1,2 … 2	
M_n	= no-load torque	(Nm)
n	= rpm pulley	(min^{-1})
M_a	= driving torque	(Nm)
P_a	= motor power	(KW)

Deflection:

$$f = \frac{F * L^3}{E * I * 192}$$

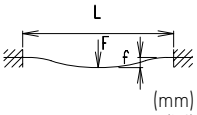

f	= deflection	(mm)
F	= load	(N)
L	= free length	(mm)
E	= elastic modulus 70000	(N/mm^2)
I	= second moment of area	(mm^4)

Linear system **MLZ 60, 60S, 80, 80S, 100**

Dimensions (mm)

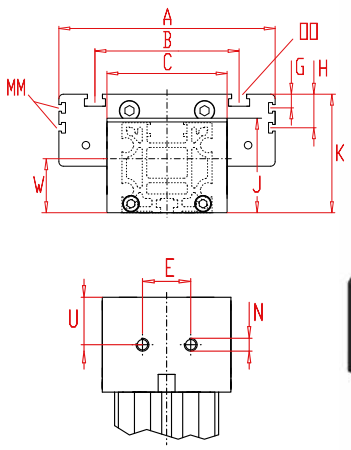

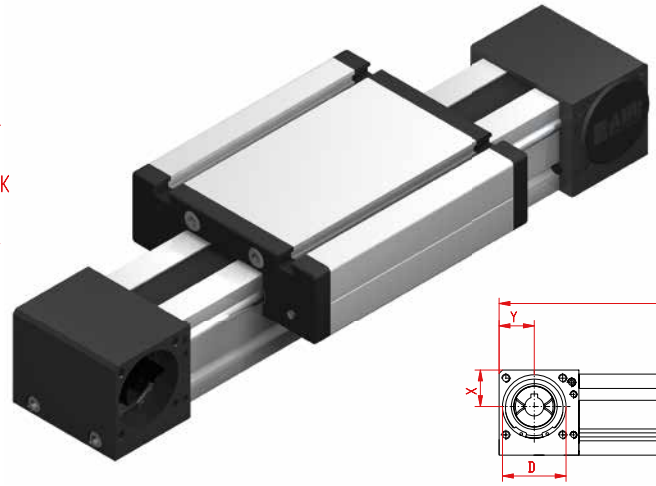

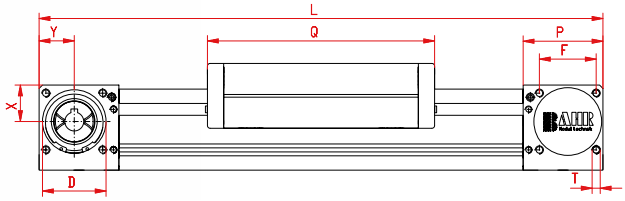

*For slide nuts refer to chapter 2.2 page 2

Increasing the carriage length will increase the basic length by the same amount.

Size ❒	Basic length L	A	B	C	D - 0,05	E	F	G	H	J	K	MM for	N	OO for	P	Q	T	U	W	X	Y	Basic weight	Weight per 100 mm
MLZ 60	290	144	96	80	47	30	42	-	-	63	79	-	M 8	M 8	59	168	M 6	29,5	36	27	26	4,7 kg	0,6 kg
MLZ 60S	315	170	108	80	47	30	42	-	-	63	83	-	M 8	M 8	59	194	M 6	29,5	30	27	26	5,7 kg	0,6 kg
MLZ 80	375	170	117	100	68	40	60	10,5	30,5	93	110	M 6	M 10	M 10	90	194	M 8	47,5	40	45	40	9,6 kg	1,0 kg
MLZ 80 S	395	190	126	100	68	40	60	12,5	30	93	111	M 6	M 10	M 8	90	214	M 8	47,5	40	45	40	10,8 kg	1,0 kg
MLZ 100	530	230	155	130	90	50	80	-	29	110	139	M10	M 12	M10	110	300	M 10	55	50	49	50	22,5 kg	1,55 kg

0 **Choice of guide body profile:**
(0) Standard **(2)** corrosion-protected guide rods and screws
(4) expanded corrosion-protected version (depending on the availability of components)

0 **Choice of carriages:**

(0)

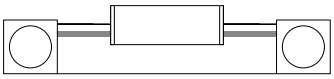

(1)

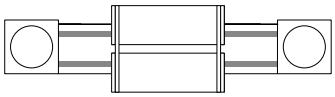

Size	Version 1	
	Q	L
60	184	306
60S	214	336
80	210	391
80S	234	415
100	316	546

0 **Drive version:**

0

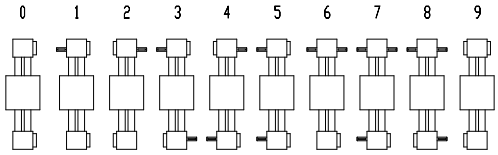

Version 9 is the same as 0, but with double sided coupling claw.

The standard version is supplied without shaft.

Belt table

Code No.		Size	Belt	mm/rev.	Number of teeth
0	**4**	**60 (S)**	5M25 (5M19)*	130	26
0	**7**	**80 (S)**	8M30 (8M25)*	176	22
0	**9**	**100**	8M50 (8M40)*	224	28

* effective toothed belt width

Shaft dimensions / Coupling claw

Size	Shaft ø h6 x length	Key	Coupling
60 (S)	14 x 35	5x5x28	14
80 (S)	18 x 45	6x6x40	19
100	22 x 45	6x6x40	24

MLZ	60	1	0	0	0	0	4	1	1500
	Pos.	1	2	3	4	5	6	7	

Basic length + stroke = total length

For combination kits and connecting elements refer to chapter 2.2

Sample ordering code:
MLZ 60 with standard body profile, standard carriage, coupling claw on one side, 1210 mm stroke.

Linear system **MLN 60, 60S**

NUBBED BELT DRIVE

- INDEPENDENT INSTALLATION POSITION
- NOBBED BELT
- LOW OPERATING VOLUME
- PRECISION

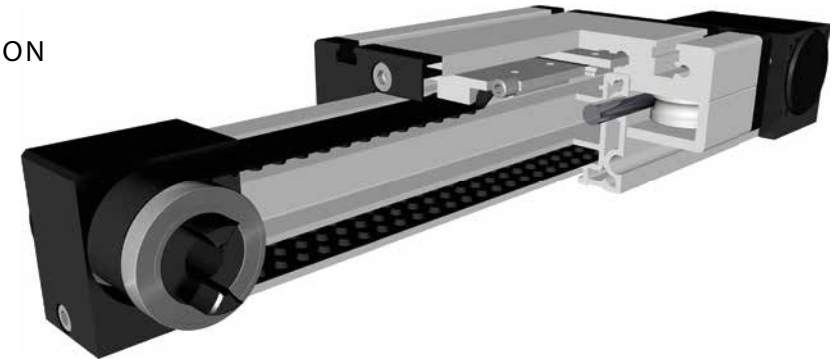

5.1

Function:
The guide body consists of an aluminium square profile with lateral, parallel, form-fit, internal hardened steel rods. The guide carriage, which is driven along the shafts by a nobbed belt, moves on the guide body with internal linear ball bearings that are adjustable free of play. The advantage of this system: The belt is guided within the profile, so that the system is independent of the mounting position. The nobbed belt is self-tracking and has a very low operating noise level thanks to its nobs being offset by 45°. Furthermore, it is almost vibration-free in the transition sections.

Fitting position: As required, max. length 6.000 mm without joints.
Carriage mounting: By T-slots.
Unit mounting: By T-slots or tapped holes in the bearing block, mounting sets.
Belt type: N10 with steel reinforcement, no backlash when changing direction, repeatability: ± 0,1 mm.

Forces and torques

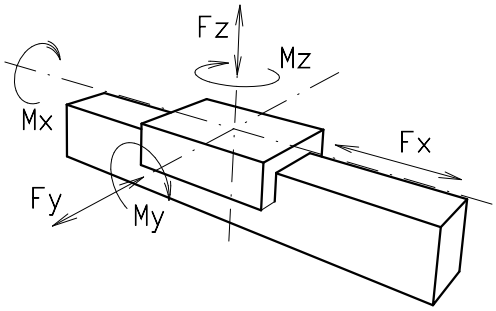

Size	60		60 S	
Forces/Torques	static	dynamic	static	dynamic
F_x (N)	1950	1300	1950	1300
F_y (N)	3000	2000	4100	3100
F_z (N)	1700	1100	2160	1600
M_x (Nm)	67	43	88	65
M_y (Nm)	90	70	190	140
M_z (Nm)	120	100	230	170
All forces and torques relate to the following: existing values / table values $\frac{Fy}{Fy_{dyn}} + \frac{Fz}{Fz_{dyn}} + \frac{Mx}{Mx_{dyn}} + \frac{My}{My_{dyn}} + \frac{Mz}{Mz_{dyn}} \leq 1$				
No-load torque				
Nm	0,6		0,7	
Speed				
(m/s) max	5		7	
Tensile force				
permanent (N)	1050		1050	
0,2 s (N)	1150		1150	
Geometrical moments of inertia of aluminium profile				
I_x mm^4	4,67x10^5		4,67x10^5	
I_y mm^4	5,21x10^5		5,21x10^5	
E-Modulus N/mm^2	70000		70000	

For life-time calculation of rollers use our homepage.

Driving torque:

$$M_a = \frac{F*P*S_i}{2000*\pi} + M_n$$

$$P_a = \frac{M_a*n}{9550}$$

F = force (N)
P = pulley action perimeter (mm)
Si = safety factor 1,2 … 2
M_n = no-load torque (Nm)
n = rpm pulley (min^{-1})
M_a = driving torque (Nm)
P_a = motor power (KW)

Deflection:

$$f = \frac{F*L^3}{E*I*192}$$

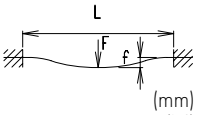

f = deflection (mm)
F = load (N)
L = free length (mm)
E = elastic modulus 70000 (N/mm^2)
I = second moment of area (mm^4)

Linear system **MLN 60, 60S**

Dimensions (mm)

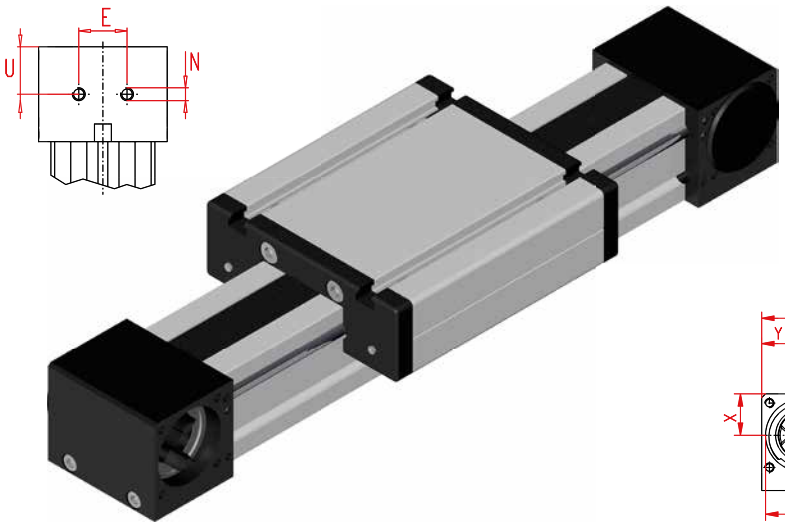

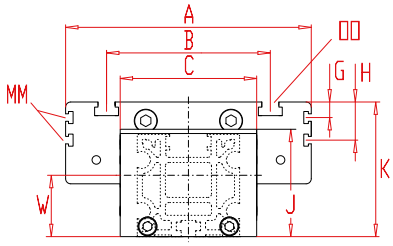

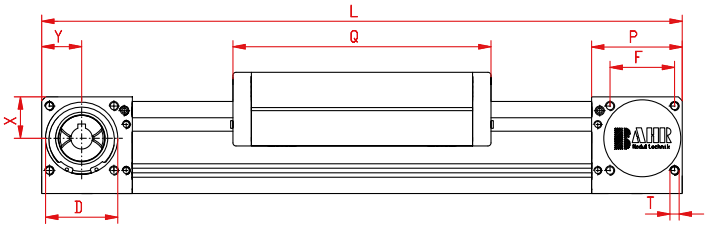

*For slide nuts refer to chapter 2.2 page 2

Increasing the carriage length will increase the basic length by the same amount.

Size ❒	Basic length L	A	B	C	D - 0,05	E	F	J	K	N	OO for	P	Q	T	U	W	X	Y	Basic weight	Weight per 100 mm
MLN 60	290	144	96	80	47	30	42	63	79	M 8	M 8	59	168	M 6	29,5	30	27	26	4,7 kg	0,6 kg
MLN 60S	315	170	108	80	47	30	42	63	83	M 8	M 8	59	194	M 6	29,5	30	27	26	5,7 kg	0,6 kg

0 **Choice of guide body profile:**
(0) Standard **(2)** corrosion-protected guide rods and screws
(4) expanded corrosion-protected version (depending on the availability of components)

0 **Choice of carriages:**

(0)

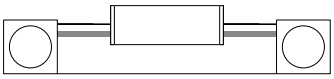

(1)

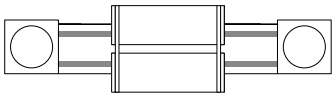

Size	Version 1	
	Q	L
60	184	306
60S	214	336

0 **Drive version:**

0

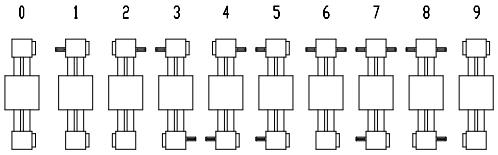

Version 9 is the same as 0, but with double sided coupling claw.

The standard version is supplied without shaft.

Belt table

Code No.		Size	Belt	mm/rev.	Number of nubs
0	**8**	**60 (S)**	Nobbed belt N10	130	13

Shaft dimensions / Coupling claw

Size	Shaft ø h6 x length	Key	Coupling
60 (S)	14 x 35	5x5x28	14

MLN	60	1	0	0	0	0	8	1	1500
	Pos.	1	2	3	4	5	6	7	

Basic length + stroke = total length

For combination kits and connecting elements refer to chapter 2.2

Sample ordering code:
MLN 60, standard body profile, standard carriage, drive version 0, knobbelt belt, 1210 mm stroke

Linear system **MLZ 60 (S) W**

BELT DRIVE

- INDEPENDENT INSTALLATION POSITION
- HIGHER PROFILE STABILITY
- HIGHER FORCE FIXTURE
- LONG TRAVERSE PATH

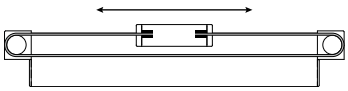

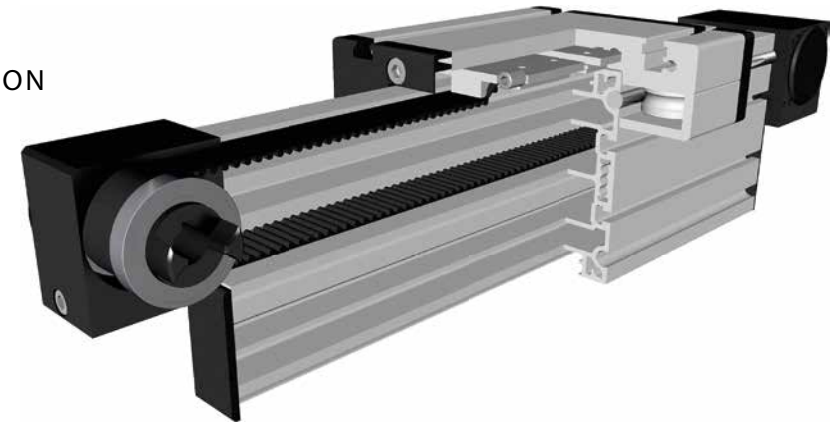

Function:
The guide body consists of an aluminium square profile with lateral, parallel, form-fit, internal hardened steel rods. The guide carriage, which is driven along the shafts by a timing belt, moves on the guide body with internal linear ball bearings that are adjustable free of play. The advantage of this system: The timing belt is guided within the profile, so that the system is independent of the mounting position. Due to the rectangular profile high torques and loads can be taken up. In addition, a very high stability and low deflection are ensured for long axis systems. The belt tension can be easily readjusted via a tensioning device within the carriage. This device also helps to adjust the symmetry of the carriages in applications where two parallel linear units are used.

Fitting position: As required, max. length 6.000 mm without joints.
Carriage mounting: By T-slots.
Unit mounting: By T-slots or tapped holes in the bearing block, mounting sets.
Belt type: HTD with steel reinforcement, no backlash when changing direction, repeatability: ± 0,1 mm.

Forces and torques

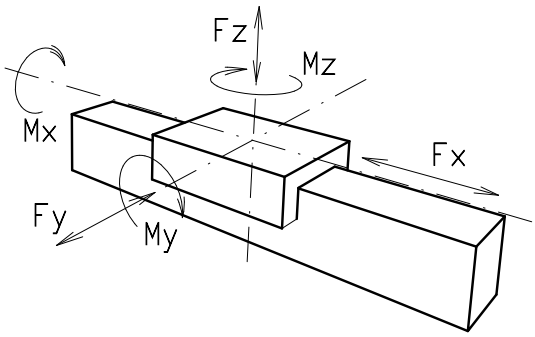

Size	60		60 S	
Forces/Torques	static	dynamic	static	dynamic
F_x (N)	894	800	894	800
F_y (N)	3000	2000	4100	3100
F_z (N)	1700	1100	2160	1600
M_x (Nm)	67	43	88	65
M_y (Nm)	90	70	190	140
M_z (Nm)	120	100	230	170
All forces and torques relate to the following: existing values / table values $\frac{Fy}{Fy_{dyn}} + \frac{Fz}{Fz_{dyn}} + \frac{Mx}{Mx_{dyn}} + \frac{My}{My_{dyn}} + \frac{Mz}{Mz_{dyn}} \leq 1$				
No-load torque				
Nm	0,6		0,7	
Speed				
(m/s) max	5		7	
Tensile force				
permanent (N)	900		900	
0,2 s (N)	1000		1000	
Geometrical moments of inertia of aluminium profile				
I_x mm^4	2,8 x 10^6		2,8 x 10^6	
I_y mm^4	9,6 x 10^5		9,6 x 10^5	
E-Modulus N/mm^2	70000		70000	

For life-time calculation of rollers use our homepage.

Driving torque:

$$M_a = \frac{F*P*S_i}{2000*\pi} + M_n$$

$$P_a = \frac{M_a*n}{9550}$$

F = force (N)
P = pulley action perimeter (mm)
Si = safety factor 1,2 … 2
M_n = no-load torque (Nm)
n = rpm pulley (min^{-1})
M_a = driving torque (Nm)
P_a = motor power (KW)

Deflection:

$$f = \frac{F*L^3}{E*I*192}$$

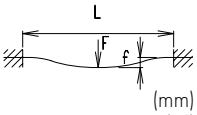

f = deflection (mm)
F = load (N)
L = free length (mm)
E = elastic modulus 70000 (N/mm^2)
I = second moment of area (mm^4)

Positioning systems MLZ 60 (S) W

Dimensions (mm)

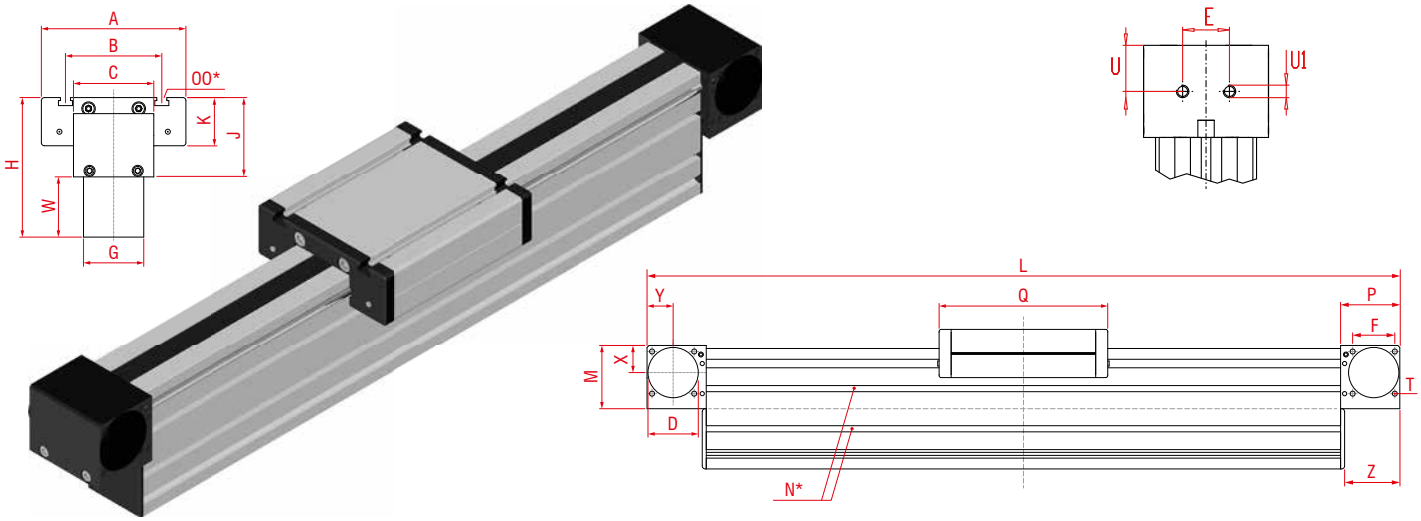

*For slide nuts refer to chapter 2.2 page 2

Increasing the carriage length will increase the basic length by the same amount.

Size	Basic length L	A	B	C	D - 0,05	E	F	G	H	J	K	M	N for	OO for	P	Q	T	U	U1	W	X	Y	Z	Basic weight	Weight per 100 mm
MLZ 60 **W**	290	144	96	80	47	30	42	60	139	79	48	63	M5	M8	59	168	M6	29,5	M8	60	27	26	55	5,2 kg	0,8 kg
MLZ 60S **W**	315	170	108	80	47	30	42	60	143	83	52	63	M5	M8	59	194	M6	29,5	M8	60	27	26	55	6,2 kg	0,8 kg

0 **Choice of guide body profile:**
(0) Standard **(2)** corrosion-protected guide rods and screws
(4) expanded corrosion-protected version (depending on the availability of components)

0 **Choice of carriages:**

(0)

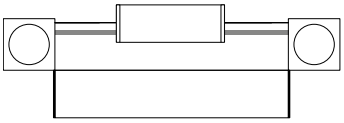

(1)

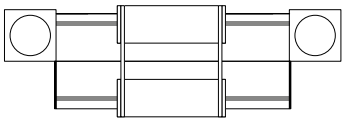

Size	Version 1	
	Q	L
60	184	306
60 S	214	336

0 **Drive version:**

0

0 1 2 3 4 5 6 7 8 9

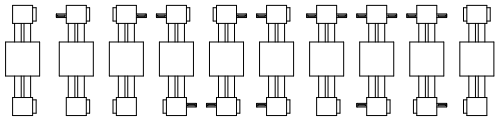

Version 9 is the same as 0, but with double sided coupling claw.

The standard version is supplied without shaft.

Belt table

Code No.		Size	Belt	mm/rev.	Number of teeth
0	4	**60 (S)**	5M25	130	26

* effective toothed belt width

Shaft dimensions / Coupling claw

Size	Shaft ø h6 x length	Key	Coupling
60 (S)	14 x 35	5x5x28	14

MLZ	60 W	1	0	0	0	0	4	1	1500
	Pos.	1	2	3	4	5	6	7	

Basic length + stroke = total length

For combination kits and connecting elements refer to chapter 2.2

Sample ordering code:
MLZ 60 W, standard body profile, standard carriage, coupling claw on one side, 1210 mm stroke

Linear system **MLZD 60 (S) W**

BELT DRIVE - TWO SEPARATELY DRIVEN CARRIAGES

- HIGHER PROFILE STABILITY
- INDEPENDENT CARRIAGES
- HIGHER FORCE FIXTURE
- INDEPENDENT INSTALLATION POSITION

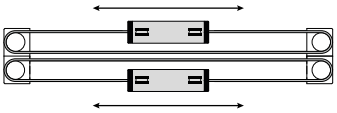

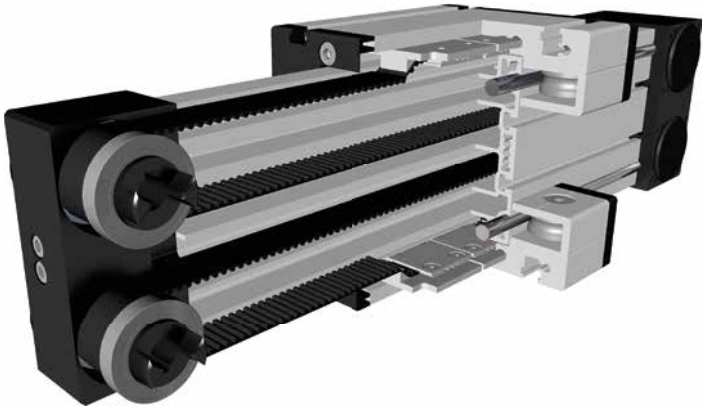

Function:
The guide body consists of an aluminium square profile with lateral, parallel, form-fit, internal hardened steel rods. Two guide carriages, each with its own drive, move along the guide body. The timing belt is guided within the profile, so that it is independent of the mounting position. Due to the high rectangular profile high torques and loads can be taken up. In addition, a very high stability is ensured for long axis systems. The toothed pulleys have maintenance-free ball bearings. The belt tension can be easily readjusted via a tensioning device within the carriage. This device also helps to adjust the symmetry of the carriages in applications where two parallel linear units are used.

Fitting position: As required, max. length 6.000 mm without joints.
Carriage mounting: By T-slots.
Unit mounting: By T-slots or tapped holes in the bearing block, mounting sets.
Belt type: HTD with steel reinforcement, no backlash when changing direction, repeatability: ± 0,1 mm.

Forces and torques

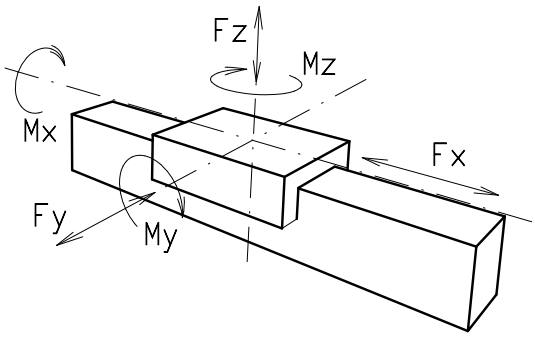

Size	60		60 S	
Forces/Torques	static	dynamic	static	dynamic
F_x (N)	894	800	894	800
F_y (N)	3000	2000	4100	3100
F_z (N)	1700	1100	2160	1600
M_x (Nm)	67	43	88	65
M_y (Nm)	90	70	190	140
M_z (Nm)	120	100	230	170
All forces and torques relate to the following:				
existing values / table values	$\frac{Fy}{Fy_{dyn}} + \frac{Fz}{Fz_{dyn}} + \frac{Mx}{Mx_{dyn}} + \frac{My}{My_{dyn}} + \frac{Mz}{Mz_{dyn}} \leq 1$			
No-load torque				
Nm	0,6		0,7	
Speed				
(m/s) max	5		7	
Tensile force				
permanent (N)	900		900	
0,2 s (N)	1000		1000	
Geometrical moments of inertia of aluminium profile				
I_x mm^4	$2{,}8 \times 10^6$		$2{,}8 \times 10^6$	
I_y mm^4	$9{,}6 \times 10^5$		$9{,}6 \times 10^5$	
E-Modulus N/mm^2	70000		70000	

For life-time calculation of rollers use our homepage.

Driving torque:

$$M_a = \frac{F * P * S_i}{2000 * \pi} + M_n$$

$$P_a = \frac{M_a * n}{9550}$$

F	= force	(N)
P	= pulley action perimeter	(mm)
Si	= safety factor 1,2 … 2	
M_n	= no-load torque	(Nm)
n	= rpm pulley	(min^{-1})
M_a	= driving torque	(Nm)
P_a	= motor power	(KW)

Deflection:

$$f = \frac{F * L^3}{E * I * 192}$$

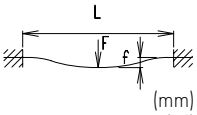

f	= deflection	(mm)
F	= load	(N)
L	= free length	(mm)
E	= elastic modulus 70000	(N/mm^2)
I	= second moment of area	(mm^4)

Linear system **MLZD 60 (S) W**

Dimensions (mm)

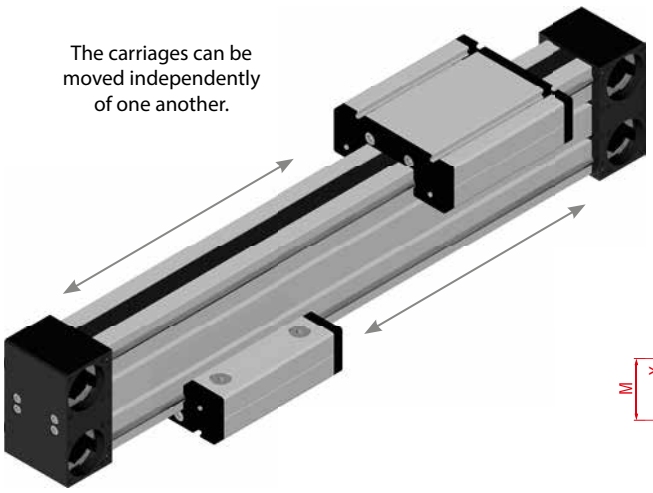

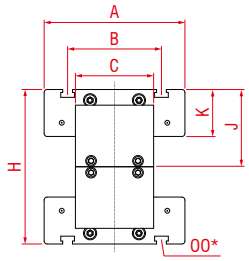

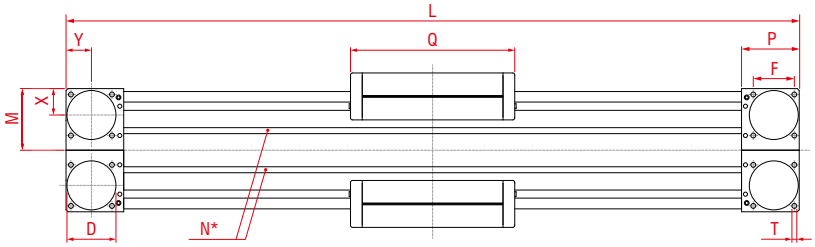

*For slide nuts refer to chapter 2.2 page 2

Increasing the carriage length will increase the basic length by the same amount.

Size	Basic length L	A	B	C	D - 0,05	F	H	J	K	M	N for	OO for	P	Q	T	X	Y	Basic weight	Weight per 100 mm
MLZD 60 **W**	290	144	96	80	47	42	158	79	48	71	M5	M8	59	168	M6	27	26	9,3 kg	1,0 kg
MLZD 60S **W**	315	170	108	80	47	42	166	83	52	71	M5	M8	59	194	M6	27	26	11,3 kg	1,0 kg

0 **Choice of guide body profile:**
(0) Standard **(2)** corrosion-protected guide rods and screws
(4) expanded corrosion-protected version (depending on the availability of components)

0 **Choice of carriages:**

(0)

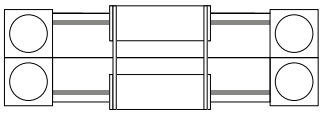

0 **Drive version:**

(0)

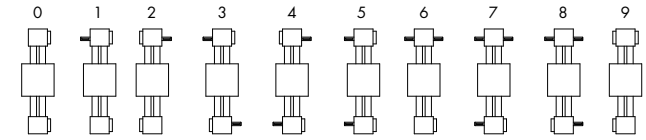

Top drive version:
Version 9 is the same as 0, but with double sided coupling claw.

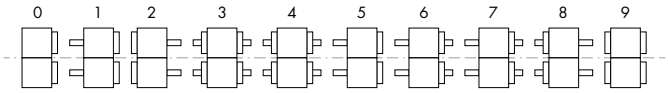

Mirror plane
Drive version
(top and bottom identical)

(0)

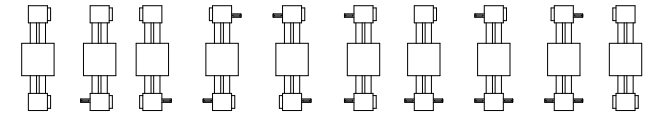

Bottom drive version:
Version 9 is the same as 0, but with double sided coupling claw.

Belt table

Code No.		Size	Belt	mm/rev.	Number of teeth
0	**4**	**60 (S)**	5M25	130	26

* effective toothed belt width

Shaft dimensions / Coupling claw

Size	Shaft ø h6 x length	Key	Coupling
60 (S)	14 x 35	5x5x28	14

MLZD	**60 W**	**1**	**0**	**0**	**0**	**0**	**4**	**1**	**1500**
	Pos.	1	2	3	4	5	6	7	

Basic length + stroke = total length

For combination kits and connecting elements refer to chapter 2.2

Sample ordering code:
MLZD 60 W, standard body profile, standard carriage, coupling claw on one side, 1210 mm stroke

BAHR Modultechnik
EDELSTAHL Rost frei
TÜV NORD
AEO

Combination options

MLZ 60W

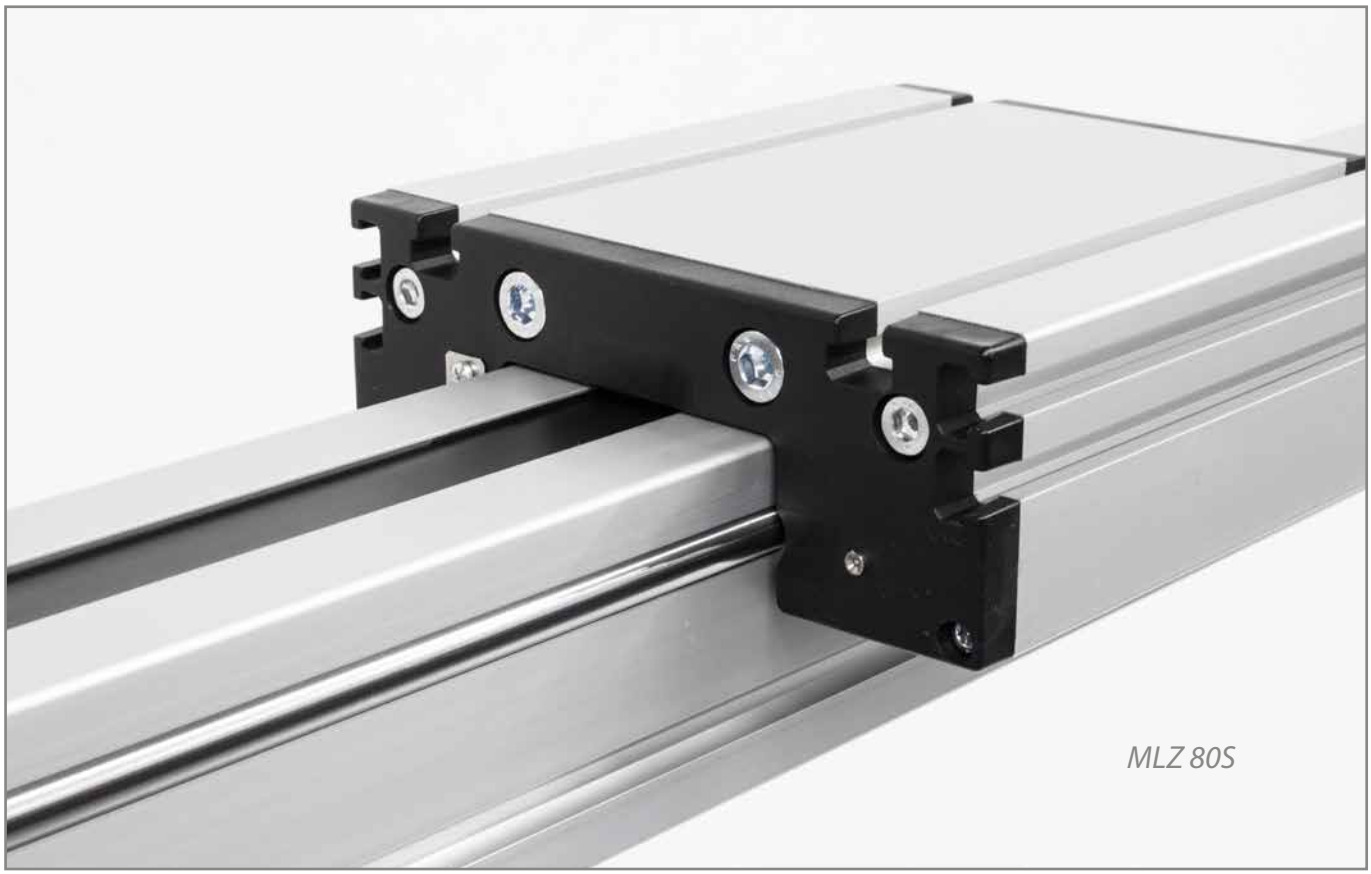

MLZ 80S

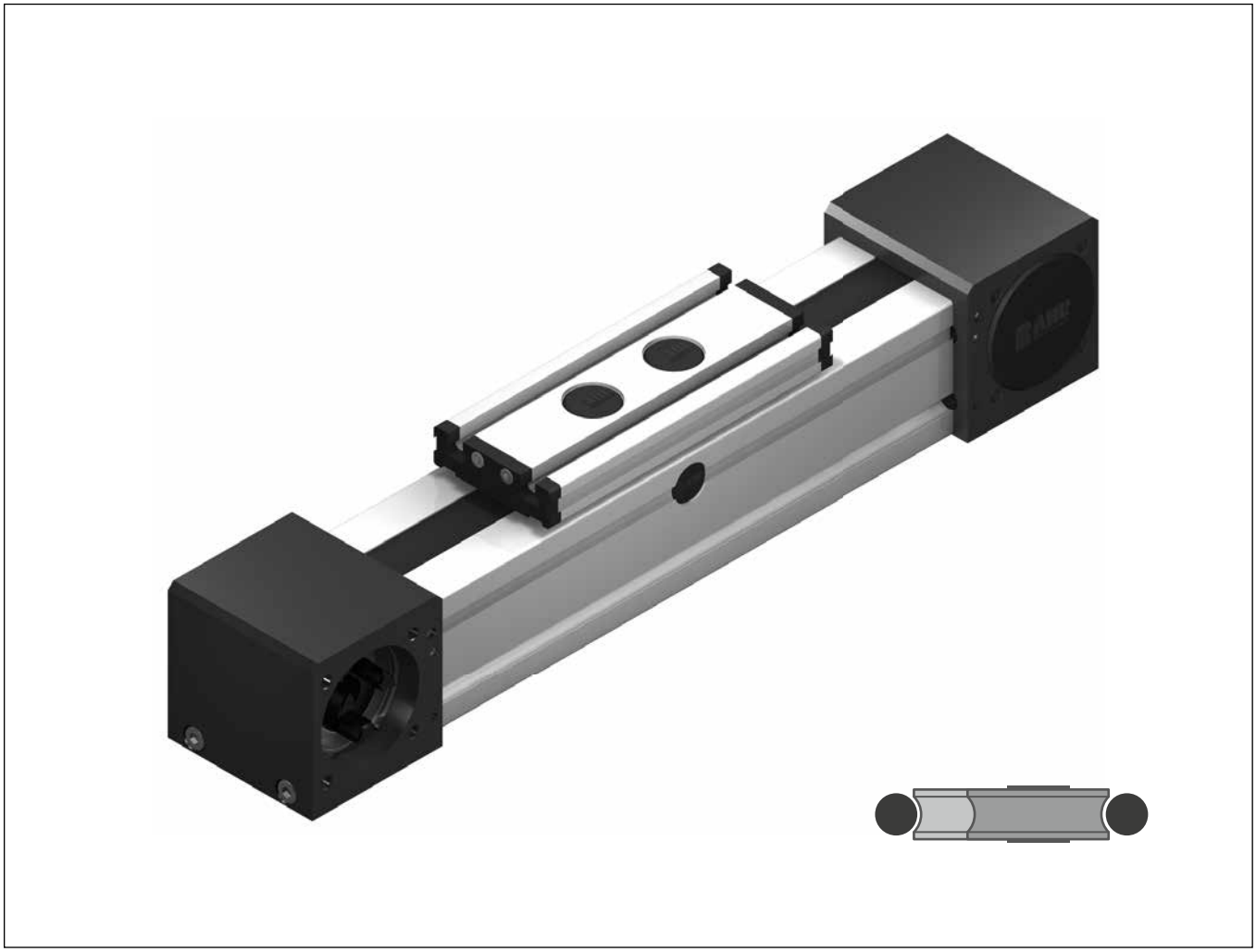

QL
Roller guide

Linear system **QLZ 60, 80, 100**

BELT DRIVE

- INDEPENDENT INSTALLATION POSITION
- LONG TRAVERSE PATH >6000 MM
- CLEAN ROOM

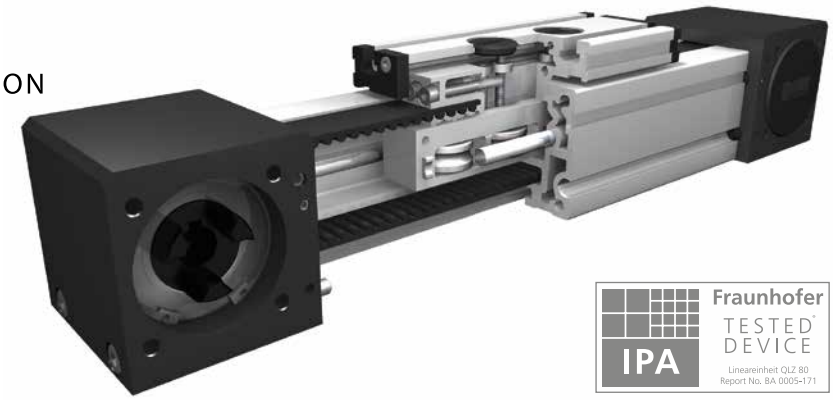

Fraunhofer IPA TESTED DEVICE Lineareinheit QLZ 80 Report No. BA 0005-171

Function:
This unit consists of a square aluminium profile with an integrated roller guide. The carriage is driven by a timing belt. Each standard pulley includes one coupling claw on one side. Belt tension can be readjusted by a simple screw adjustment device in the carriage. This device can also be used for symmetrical adjustment of two or more linear units running parallel. This linear unit is suitable for application in clean rooms of clean-room classification 1.000 (corresponding to US Fed. Standard 209 E). With this series, multi-part assembled units with long strokes can be realized.

Fitting position: As required. Max. length 6.000 mm without joints.
Carriage mounting: By T-slots.
Unit mounting: By T-slots and mounting sets. The linear axis can be combined with any T-slot profile.
Belt performance: HTD with steel reinforcement, no backlash when changing direction, repeatability ± 0,1 mm.
Carriage support: In the standard version, the carriage runs on 4 rollers which can be adjusted and serviced at a central servicing position. For longer carriages the number of rollers can be increased.

Forces and torques

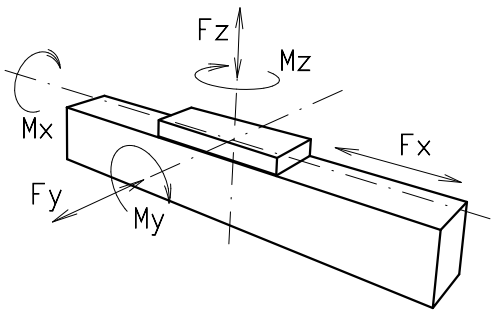

Size	60		80		100	
Forces/Torques	static	dynamic	static	dynamic	static	dynamic
F_x (N)	894	800	1900	1800	4000	3800
F_y (N)	600	500	1600	1240	1900	1500
F_z (N)	900	650	1500	1200	2100	1700
M_x (Nm)	15	10	50	40	85	60
M_y (Nm)	60	50	100	80	140	110
M_z (Nm)	40	30	75	60	110	90
All forces and torques related to the following: existing values / table values $\frac{Fy}{Fy_{dyn}} + \frac{Fz}{Fz_{dyn}} + \frac{Mx}{Mx_{dyn}} + \frac{My}{My_{dyn}} + \frac{Mz}{Mz_{dyn}} \leq 1$						
No-load torque						
Nm	0,6		0,8		1,2	
Speed						
(m/s) max	4		6		7	
Tensile force						
permanent (N)	900		1900		4000	
0,2 s (N)	1000		2090		4300	
Geometrical moments of inertia of aluminium profile						
I_x mm^4	4,3x10^5		16,5x10^5		34,93x10^5	
I_y mm^4	4,8x10^5		18,7x10^5		45,61x10^5	
Elastic modulus N/mm^2	70000		70000		70000	

For life-time calculation of rollers use our homepage.

Driving torque:

$$M_a = \frac{F * P * S_i}{2000 * \pi} + M_n$$

$$P_a = \frac{M_a * n}{9550}$$

F = force (N)
P = pulley action perimeter (mm)
Si = safety factor 1,2 … 2
M_n = no-load torque (Nm)
n = rpm pulley (min^{-1})
M_a = driving torque (Nm)
P_a = motor power (KW)

Deflection:

$$f = \frac{F * L^3}{E * I * 192}$$

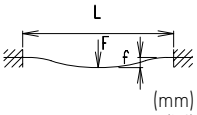

f = deflection (mm)
F = load (N)
L = free length (mm)
E = elastic modulus 70000 (N/mm^2)
I = second moment of area (mm^4)

Linear system **QLZ 60, 80, 100**

Dimensions (mm)

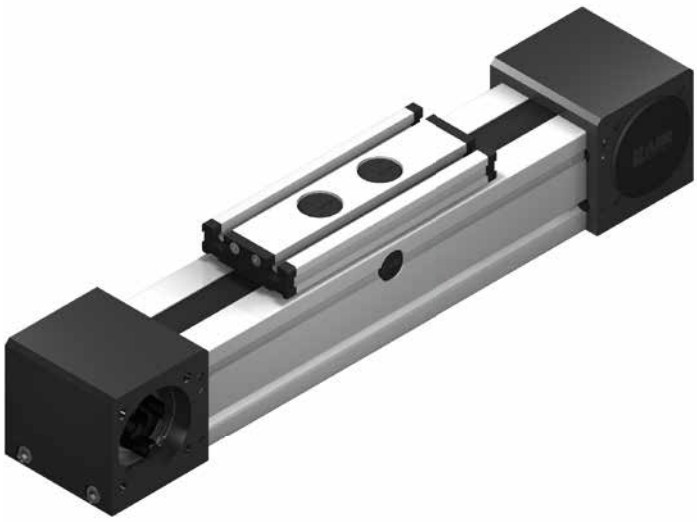

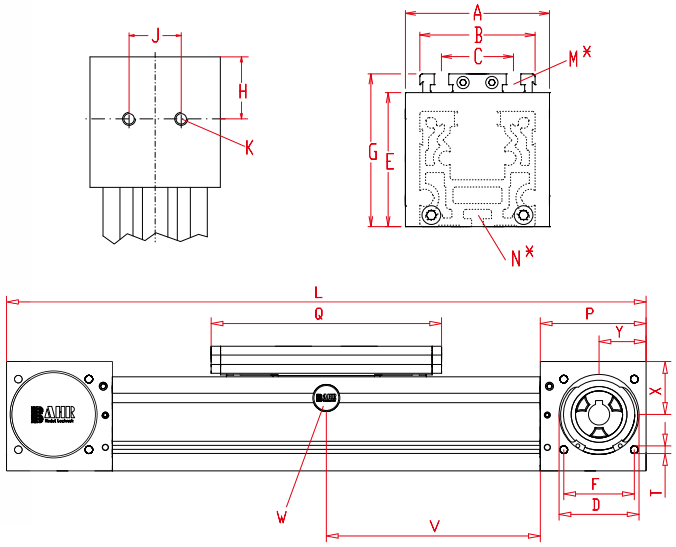

*For slide nuts refer to chapter 2.2 page 2

V = Q + 100 mm W = servicing position

Increasing the carriage length will increase the basic length by the same amount.

Size ❒	Basic length L	A	B	C	D -0,05	E	F	G	H	J	K	N for	M for	P	Q	T	X	Y	Basic weight	Weight per 100 mm
QLZ 60	280	80	60	36	47	63	42	79	29,5	30	M 8	M 5	M 6	59	152	M 6	27	26	3,2 Kg	0,39 kg
QLZ 80	390	100	80	50	68	93	60	106	47,5	40	M 10	M 6	M 8	90	196	M 8	45	40	9,6 Kg	0,86 Kg
QLZ 100	490	130	100	66	90	110	80	129	55	50	M 12	M 10	M 10	110	260	M 10	49	50	15,8 kg	1,23 Kg

0 **Choice of guide body profile:**
(0) Standard **(2)** corrosion-protected guide rods and screws
(4) expanded corrosion-protected version (depending on the availability of components)

0 **Choice of carriages:**

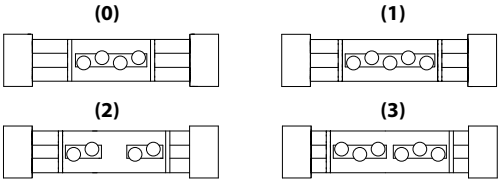

Size	Version 1		Version 2		Version 3	
	Q	L	Q	L	Q	L
60	192	320	>232	>360	>232	>360
80	246	440	>296	>490	>296	>490
100	320	550	>388	>610	>388	>610

0 **Drive version:**

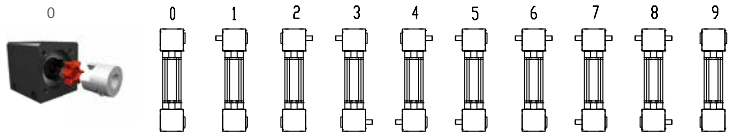

Size	Shaft ø h6 x length	Key
60	14 x 35	5x5x28
80	18 x 45	6x6x40
100	22 x 45	6x6x40

9 is as 0, but with coupling claws on both sides. The standard version is supplied without shaft. A shaft can be retrofitted by inserting it into the pulley bore and securing it with 2 locking rings or tension sets (size 100).

Belt table / Coupling claw:

Code No.		Size	Belt	Pulley		Coupling
				mm/rev.	Number of teeth	
0	**3**	60	5M25	130	26	14
0	**4**	80	8M30	176	22	19
0	**7**	100	8M50	224	28	24

QLZ	80	1	0	0	0	0	4	1	1500
	Pos.	1	2	3	4	5	6	7	

— Basic length + stroke = total length

For additional accessories refer to chapter 2.2

Sample ordering code:
QLZ80, standard body profile, standard carriage, coupling claw on one side, 1110 mm stroke

Linear system **QLR 60, 80, 100**

ROLLER GUIDE

- WITHOUT DRIVE
- SUPPORT UNIT
- WITHOUT COVERBAND

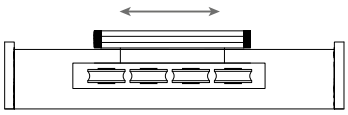

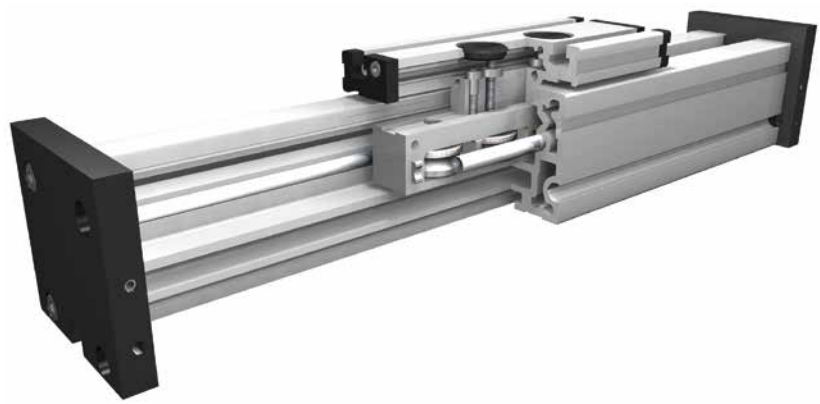

Function:
This unit consists of a square aluminium profile with an integrated roller guide. The carriage, which has internal linear ball bearings that can be adjusted free of play, moves along the guide body. This roller guide can be driven by a pneumatic cylinder or other additional drives or it serves as a load carrying slide unit. Construction compatible with QLZ.

Fitting position: As required. Max. length 6.000 mm without joints.
Carriage mounting: By T-slots.
Unit mounting: By T-slots and mounting sets. The linear axis can be combined with any T-slot profile.
Carriage support: In the standard version, the carriage runs on 4 rollers which can be adjusted and serviced at a central servicing position. For longer carriages the number of rollers can be increased.

Forces and torques

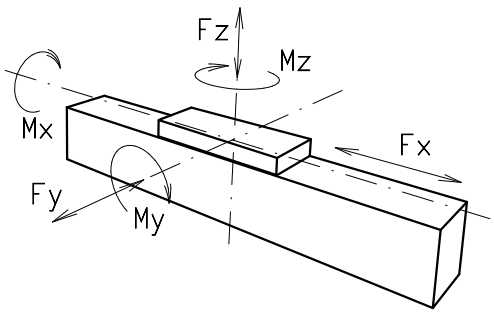

Size	60		80		100	
Forces/torques	static	dynamic	static	dynamic	static	dynamic
F_x (N)	-	-	-	-	-	-
F_y (N)	600	500	1600	1240	1900	1500
F_z (N)	900	650	1500	1200	2100	1700
M_x (Nm)	15	10	50	40	85	60
M_y (Nm)	60	50	100	80	140	110
M_z (Nm)	40	30	75	60	110	90

All forces and torques related to the following:

existing values / table values: $\frac{Fy}{Fy_{dyn}} + \frac{Fz}{Fz_{dyn}} + \frac{Mx}{Mx_{dyn}} + \frac{My}{My_{dyn}} + \frac{Mz}{Mz_{dyn}} \leq 1$

Speed			
(m/s) max	4	6	7
Geometrical moments of inertia of aluminium profile			
I_x mm^4	4,3x10^5	16,5x10^5	34,93x10^5
I_y mm^4	4,8x10^5	18,7x10^5	45,61x10^5
Elastic modulus N/mm^2	70000	70000	70000

For life-time calculation of rollers use our homepage.

Deflection:

$$f = \frac{F * L^3}{E * I * 192}$$

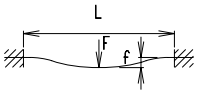

f = deflection (mm)
F = load (N)
L = free length (mm)
E = elastic modulus 70000 (N/mm^2)
I = second moment of area (mm^4)

Linear system **QLR 60, 80, 100**

Dimensions (mm)

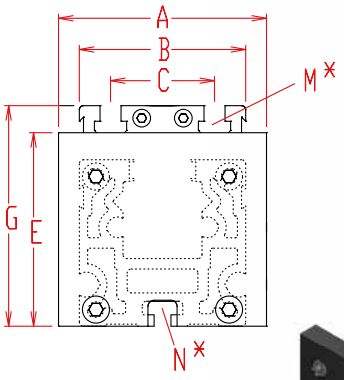

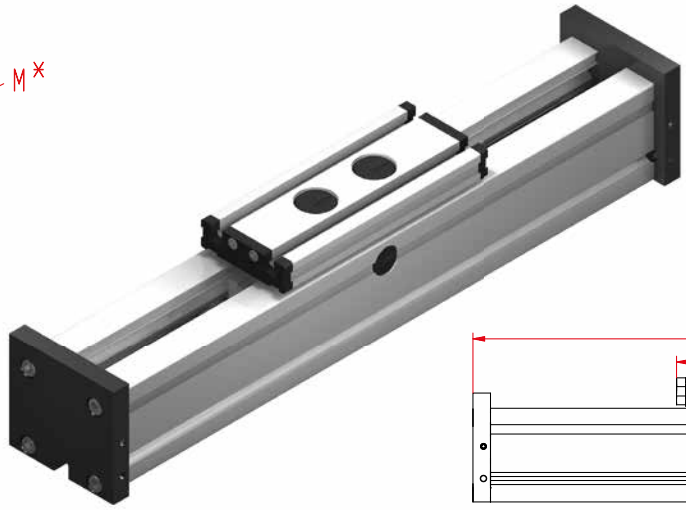

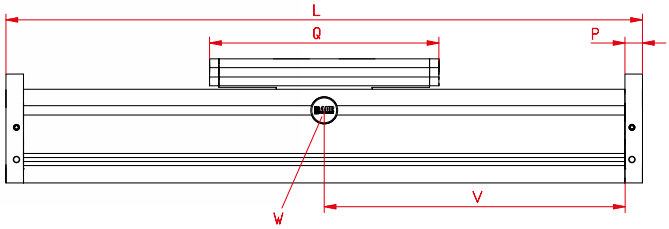

*For slide nuts refer to chapter 2.2 page 2

V = Q + 100 mm W = servicing position

Increasing the carriage length will increase the basic length by the same amount.

6.1

Size ❒	Basic length L	A	B	C	E	G	N for	M for	P	Q	Basic weight	Weight per 100 mm
QLR 60	180	80	60	36	60	79	M 5	M 6	12	152	1,45 kg	0,37 kg
QLR 80	240	100	80	50	93	106	M 6	M 8	17	196	4,2 kg	0,82 kg
QLR 100	310	130	100	66	110	129	M 10	M 10	20	260	7,2 kg	1,17 kg

0 **Choice of guide body profile:**
(0) Standard **(2)** corrosion-protected guide rods and screws
(4) expanded corrosion-protected version (depending on the availability of components)

0 **Choice of carriages:**

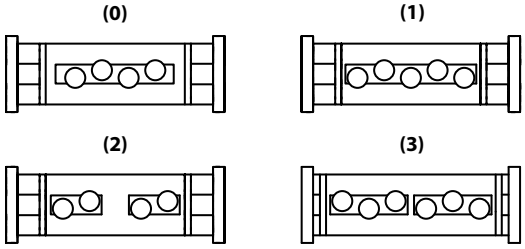

Size	Version 0		Version 1		Version 2		Version 3	
	Q	L	Q	L	Q	L	Q	L
60	152	180	192	220	>232	>260	>232	>260
80	196	240	246	290	>296	>340	>296	>340
100	260	310	320	370	>388	>430	>388	>430

QLR	80	0	0	0	0	0	0	0	1500
	Pos.	1	2	3	4	5	6	7	

Basic length + stroke = total length

For additional accessories refer to chapter 2.2

Sample ordering code:
QLR80 with standard body profile, standard carriage and 1260 mm stroke

Possible mounting styles

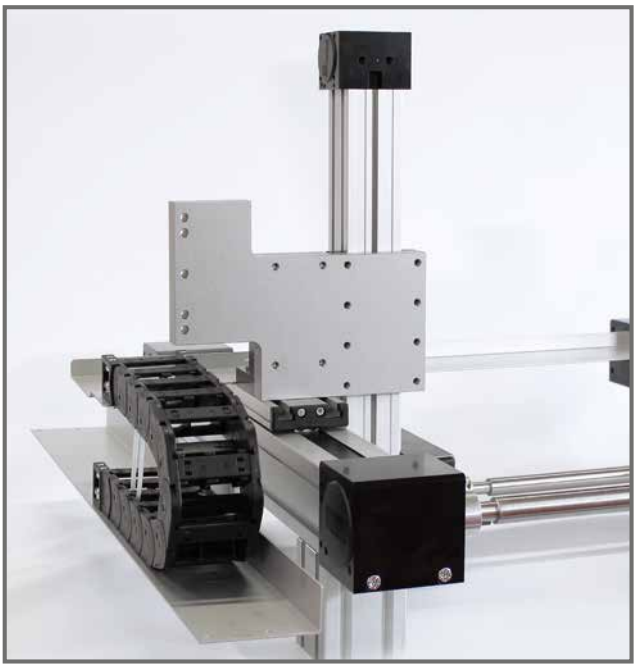

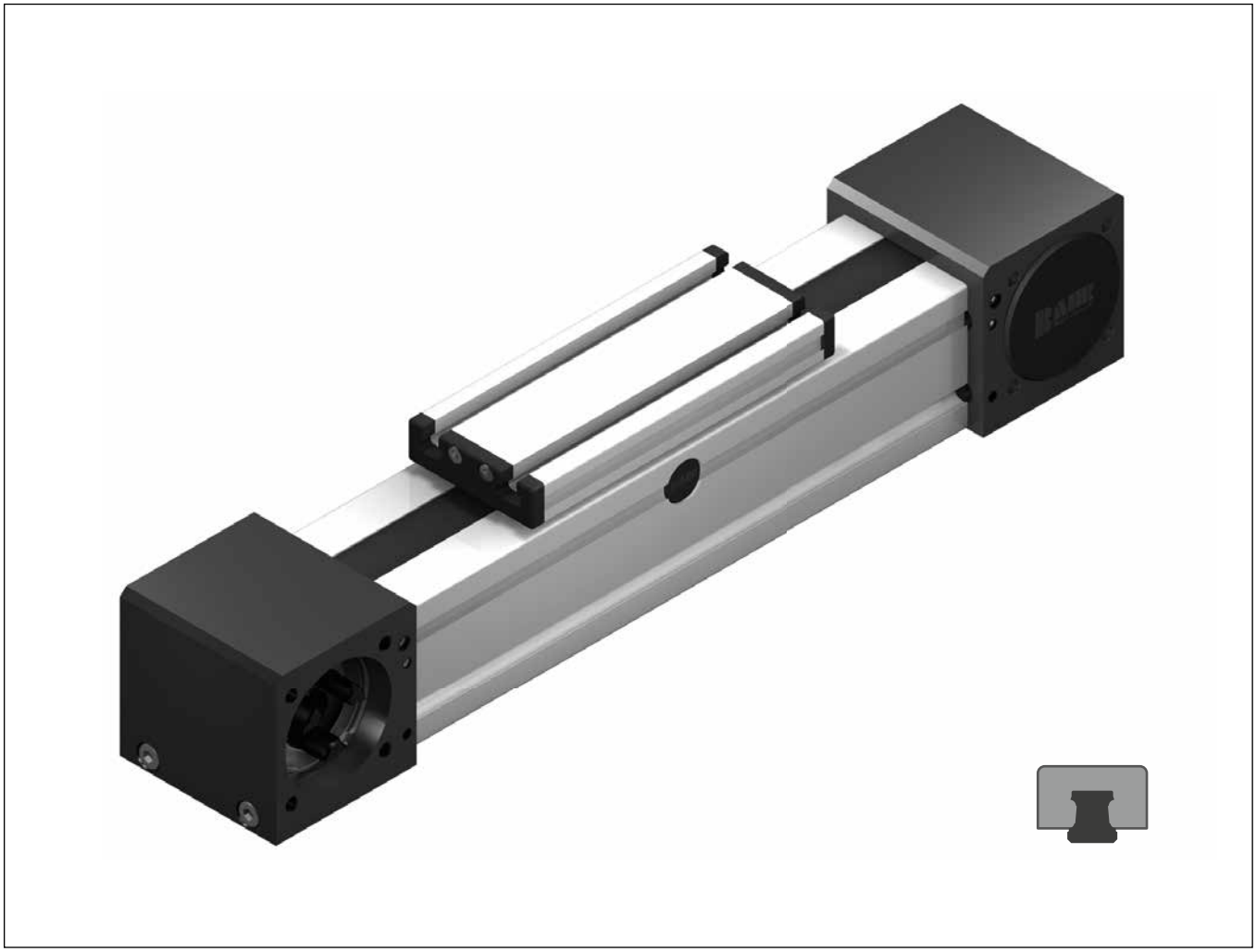

QS
Rail guide

Linear system **QSZ 60, 80, 100, 125**

BELT DRIVE

- HIGH LOAD CAPACITY
- LONG TRAVERSE PATH >6000 MM
- CLEAN ROOM

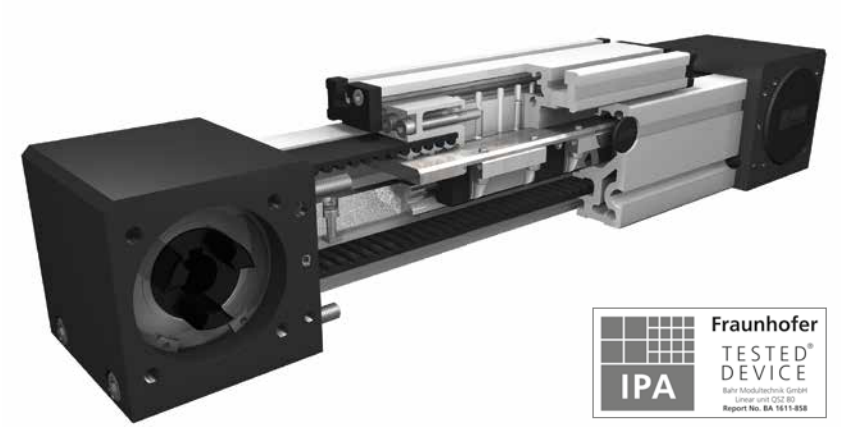

Fraunhofer IPA TESTED DEVICE

Function:
This unit consists of a square aluminium profile with an integrated ball rail. The carriage is moved by a belt drive. Each standard pulley includes one coupling claw on one side. Belt tension can be readjusted by a simple screw adjustment device in the carriage. This device can also be used for symmetrical adjustment of two or more linear units running parallel. This linear unit is suitable for application in clean rooms of clean-room classification 1.000 (corresponding to US Fed. Standard 209 E). With this series, multi-part assembled units with long strokes can be realized.

7.1

Fitting position: As required. Max. length 6.000 mm without joints.
Carriage mounting: By T-slots.
Unit mounting: By T-slots and mounting sets. The linear axis can be combined with any T-slot profile.
Belt performance: HTD with steel reinforcement, no backlash when changing direction, repeatability ± 0,1 mm.
Carriage support: In the standard version, the carriage runs on two runner blocks which can be adjusted and serviced at a central servicing position. For longer carriages the number of runner blocks can be increased.

Forces and torques

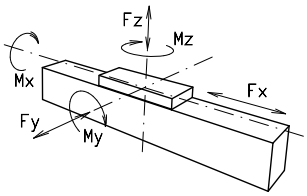

Size	60		80		100		125	
permitted dyn. forces*	5000 km	10000 km	5000 km	10000 km	5000 km	10000 km	5000 km	10000 km
F_x (N)	894	800	1900	1800	4000	3800	5900	5750
F_y (N)	1410	990	3570	2550	4080	2900	6892	5470
F_z (N)	3520	2500	8500	6050	10300	7270	17205	13659
M_x (Nm)	33	23	107	75	142	101	288	228
M_y (Nm)	104	73	310	222	439	311	1110	881
M_z (Nm)	100	70	296	210	412	292	1012	803
All forces and torques related to the following:								
existing values / table values	$\frac{Fy}{Fy_{dyn}} + \frac{Fz}{Fz_{dyn}} + \frac{Mx}{Mx_{dyn}} + \frac{My}{My_{dyn}} + \frac{Mz}{Mz_{dyn}} \leq 1$							
No-load torque								
Nm	1,0		1,4		1,8			
Speed								
(m/s) max	5		5		5		5	
Tensile force								
permanent (N)	900		1900		4000		5900	
0,2 s (N)	1000		2090		4300		6350	
Geometrical moments of inertia of aluminium profile								
I_x mm^4	$4{,}3 \times 10^5$		$14{,}3 \times 10^5$		$31{,}8 \times 10^5$		$74{,}9 \times 10^5$	
I_y mm^4	$5{,}8 \times 10^5$		$18{,}7 \times 10^5$		$46{,}5 \times 10^5$		$106{,}5 \times 10^5$	
Elastic modulus N/mm^2	70000		70000		70000		70000	

For life-time calculation use our homepage.

** referred to lifetime*

Driving torque:

$$M_a = \frac{F * P * S_i}{2000 * \pi} + M_n$$

$$P_a = \frac{M_a * n}{9550}$$

F = force (N)
P = pulley action perimeter (mm)
Si = safety factor 1,2 … 2
M_n = no-load torque (Nm)
n = rpm pulley (min^{-1})
M_a = driving torque (Nm)
P_a = motor power (KW)

Deflection:

$$f = \frac{F * L^3}{E * I * 192}$$

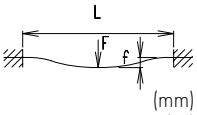

f = deflection (mm)
F = load (N)
L = free length (mm)
E = elastic modulus 70000 (N/mm²)
I = second moment of area (mm⁴)

Linear system **QSZ 60, 80, 100, 125**

Dimensions (mm)

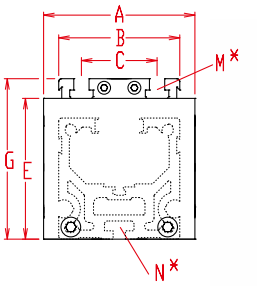

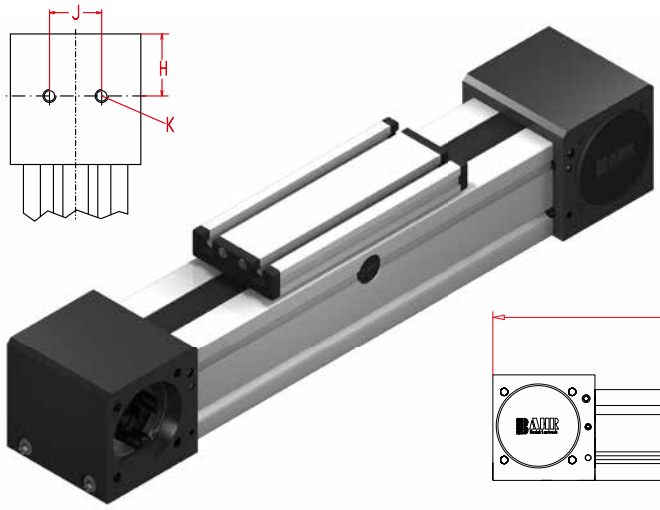

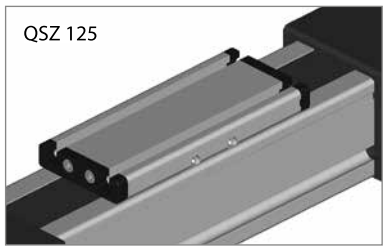

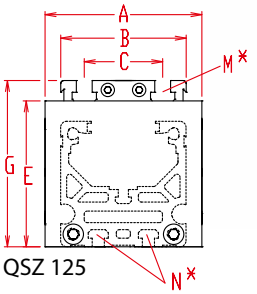

QSZ 125

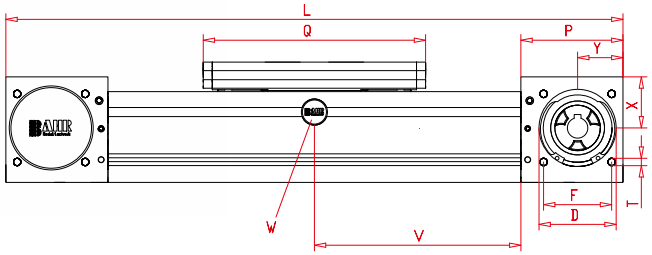

*For slide nuts refer to chapter 2.2 page 2

Increasing the carriage length will increase the basic length by the same amount.

Size ❒	Basic length L	A	B	C	D -0,05	E	F	G	H	J	K	N for	M for	P	Q	T	X	Y	Basic weight	Weight per 100 mm
QSZ 60	300	80	60	36	47	63	42	79	29,5	30	M 8	M 5	M 6	59	177	M 6	27	26	3,5 kg	0,55 kg
QSZ 80	430	100	80	50	68	93	60	106	47,5	40	M 10	M 6	M 8	90	232	M 8	45	40	10,4 kg	0,96 kg
QSZ 100	510	130	100	66	90	110	80	129	55	50	M 12	M 10	M 10	110	268	M 10	49	50	15,9 kg	1,47 kg
QSZ 125	570	160	125	82	110	134,5	100	157,5	65	60	M 12	M 10	M 12	130	300	M 10	60	60	30,5 kg	2,21 kg

V = Q + 100 mm
W = servicing position

0 **Choice of guide body profile:**
(0) Standard **(1)** corrosion-protected screws
(4) expanded corrosion-protected version (depending on the availability of components)

0 **Choice of carriages:**

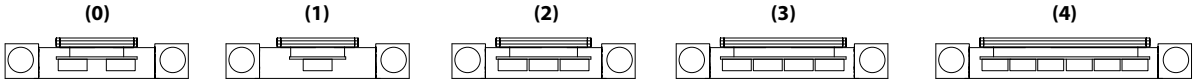

Size	Version 0		Version 1		Version 2		Version 3		Version 4	
	Q	L	Q	L	Q	L	Q	L	Q	L
60	177	300	152	280	242	370	302	430		
80	232	430	196	390	312	510	390	585		
100	268	510	260	500	362	610	448	690	628	860
125	300	570	260	530	365	635	467	740		

0 **Drive version:**

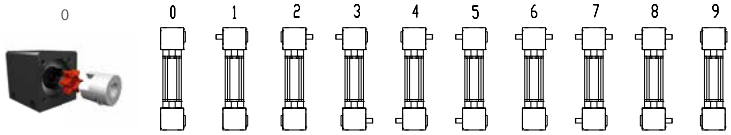

Size	Shaft ø h6 x length	Key
60	14 x 35	5x5x28
80	18 x 45	6x6x40
100	22 x 45	6x6x40
125	30 x 55	8x7x50

9 is as 0, but with coupling claws on both sides. The standard version is supplied without shaft. A shaft can be retrofitted by inserting it into the pulley bore and securing it with 2 locking rings or clamping sets (Size 100 + 125).

Belt table / Coupling claw:

Code No.		Size	Belt	Pulley		Coupling
				mm/rev.	Number of teeth	
0	**3**	**60**	5M25	130	26	14
0	**4**	**80**	8M30	176	22	19
0	**7**	**100**	8M50	224	28	24
0	**9**	**125**	8M70	288	36	28

QSZ	80	1	0	0	0	0	4	1	1500
	Pos.	1	2	3	4	5	6	7	

— Basic length + stroke = total length

For additional accessories refer to chapter 2.2

Sample ordering code:
QSZ80 with standard body profile, standard carriage, coupling claw on one side, 1070 mm stroke

BAHR Modultechnik
EDELSTAHL Rost frei
TÜV NORD
AEO

Linear system **QSZT 80, 100**

BELT DRIVE

HORIZONTAL TELESCOPIC SYSTEM

HIGH RIGIDITY

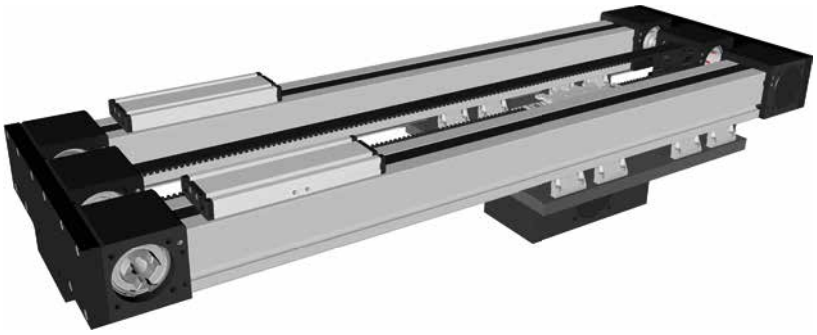

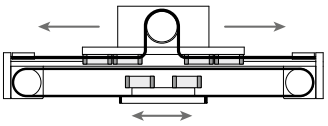

Function:
Linear unit consisting of two parallel QSZ axes. The carriage, which is connected to the runner blocks, is moved by means of a toothed belt. The belt tension can be easily readjusted via a tensioning device within the carriage. This device also helps to adjust the symmetry of the carriages. The system is driven by a central toothed belt with Omega deflection, and the special connection of the toothed belts results in a telescopic movement. The toothed pulley is equipped with maintenance-free ball bearings. The belt tension can be easily readjusted via a tensioning device on the bottom side. This linear system is designed for high loads.

Fitting position:	Preferably horizontal, Max. length 3.000 mm without joints.
Carriage mounting:	By T-slots.
Unit mounting:	By mounting sets.
Belt performance:	HTD with steel reinforcement, no backlash when changing direction, repeatability ± 0,1 mm.
Carriage support:	In the standard version, the carriage runs on voer runner blocks which can be adjusted and serviced at a central servicing position. For longer carriages the number of runner blocks can be increased.

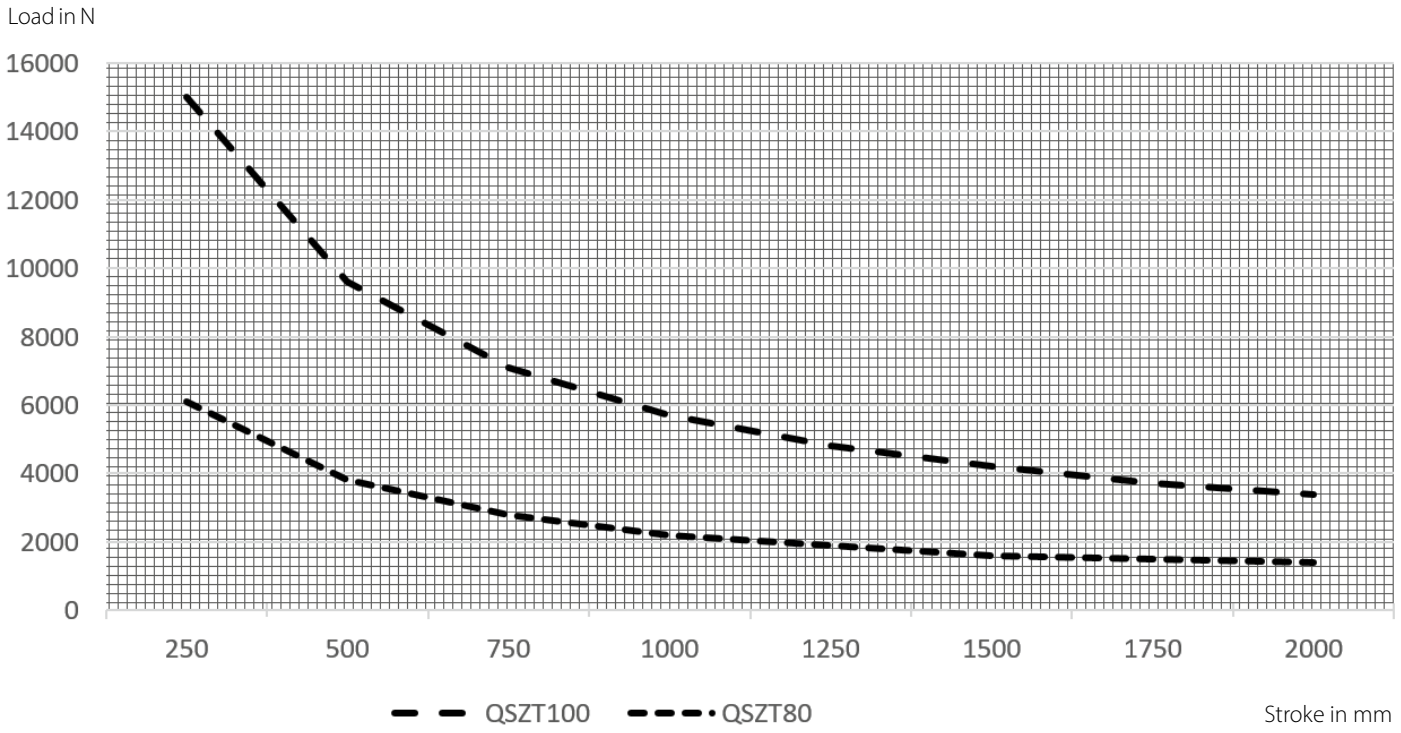

Linear system **QSZT 80, 100**

Dimensions (mm)

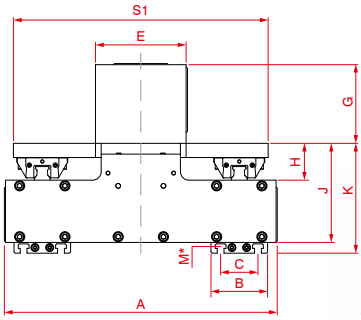

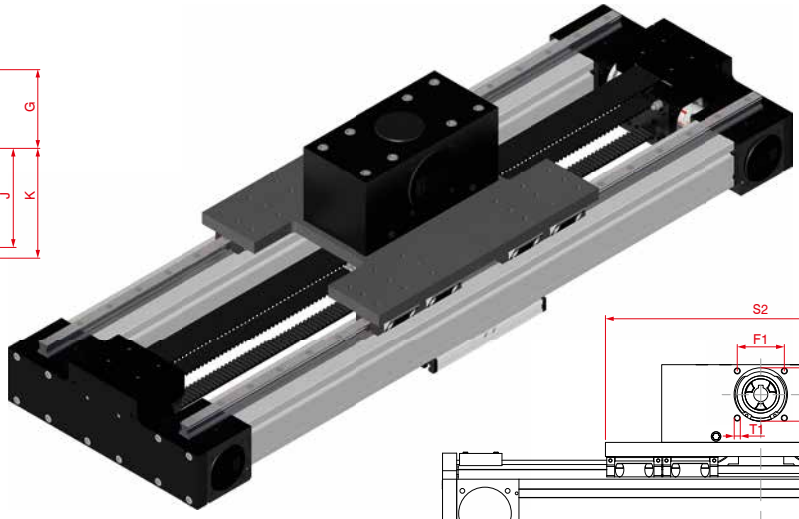

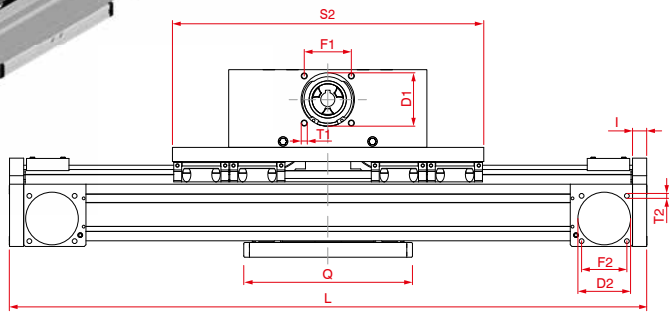

V = Q + 100 mm W = servicing position

*For slide nuts refer to chapter 2.2 page 2

Increasing the carriage length will increase the basic length by the same amount.

Size	Basic length L	A	B	C	D1	D2	E	F1	F2	G	H	I	J	K	M for	P	Q	S1	S2	T1	T2	Basic weight	Weight per 100 mm
QSZT 80	500	388	80	50	90	68	130	80	60	130	54,5	20	147,5	160,5	M8	90	262	364	450	M10	M8	56 kg	2,4 kg
QSZT 100	600	478	100	66	110	90	160	100	80	139	65	25	175	194	M10	110	298	450	550	M10	M10	96 kg	4,1 kg

0 **Choice of guide body profile:**
(0) Standard **(1)** corrosion-protected screws
(4) expanded corrosion-protected version (depending on the availability of components)

0 **Choice of carriages:**

(0) **(2)** **(3)**

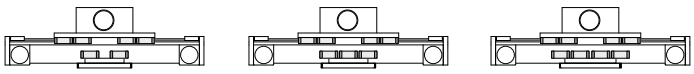

Size	Version 2		Version 3	
	Q	L	Q	L
80	356	580	504	730
100	392	700	508	790

0 **Drive version:**

(0) **(1)** **(2)** **(3)**

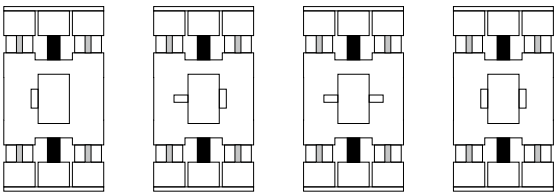

Size	Shaft ø h6 x length	Key
80	22 x 45	6x6x40
100	30 x 55	8x7x40

Version 3 is the same as 0,
but with double sided coupling claw.

Belt table / Coupling claw:

Code No.		Size	Belt	Pulley		Coupling
				mm/rev.	Number of teeth	
0	4	**80**	8M 30/50	256	32	24
0	7	**100**	8M 50/70	304	38	28

QSZT	**80**	**4**	**0**	**0**	**2**	**0**	**7**	**1**	**1500**
	Pos.	1	2	3	4	5	6	7	

Basic length + stroke = total length

Sample ordering code:
QSZT 80 with standard body profile, carriage version 0, drive version 1, 1000 mm stroke

Linear system **QSSZ 60, 80**

BELT DRIVE

Ω OMEGA SYSTEM

CLEAN ROOM

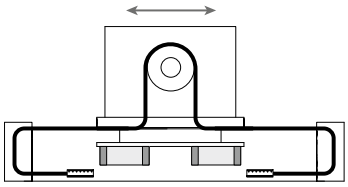

Fraunhofer TESTED® DEVICE IPA
Bahr Modultechnik GmbH
Positioniersystem QSSZ 80
Report No. BA 0603-344

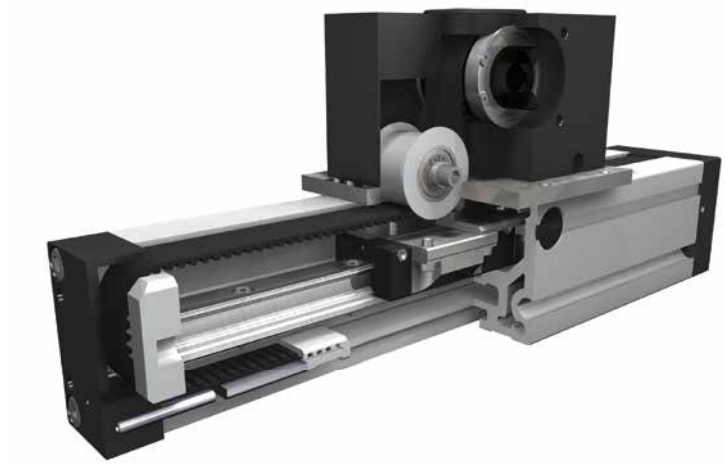

Function:
This linear unit consists of a square aluminium profile with integrated rail guidance. The carriage, which has runner blocks, is driven by a timing belt. Each standard pulley includes a coupling claw on one side and is equipped with maintenance-free ball bearings. Belt tension can be readjusted by a simple screw adjustment device in the carriage. This device can also be used for symmetrical adjustment of two or more linear units running parallel.

Fitting position: As required. Max. length 3.000 mm without joints.
Carriage mounting: By T-slots.
Unit mounting: By T-slots and mounting sets. The linear axis can be combined with any T-slot profile.
Belt performance: HTD with steel reinforcement, no backlash when changing direction, repeatability ± 0,1 mm.
Carriage support: In the standard version, the carriage runs on 2 runner blocks which can be serviced at a central servicing position. For longer carriages the number of runner blocks can be increased.

Forces and torques

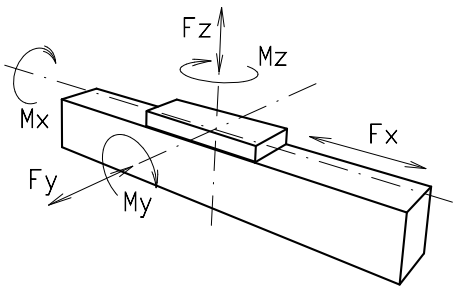

Size	60		80	
permitted dyn. forces*	5000 km	10000 km	5000 km	10000 km
F_x (N)	97	87	223	200
F_y (N)	350	240	890	630
F_z (N)	880	625	2100	1500
M_x (Nm)	8	6	26	18
M_y (Nm)	26	18	77	55
M_z (Nm)	25	17	74	52
All forces and torques related to the following: existing values / table values $\frac{Fy}{Fy_{dyn}} + \frac{Fz}{Fz_{dyn}} + \frac{Mx}{Mx_{dyn}} + \frac{My}{My_{dyn}} + \frac{Mz}{Mz_{dyn}} \leq 1$				
No-load torque				
Nm	1,0		1,4	
Speed				
(m/s) max	3		3	
Tensile force				
permanent (N)	Lifetime calculation see the internet			
Geometrical moments of inertia of aluminium profile				
I_x mm⁴	$4{,}3 \times 10^5$		$14{,}3 \times 10^5$	
I_y mm⁴	$5{,}8 \times 10^5$		$18{,}7 \times 10^5$	
Elastic modulus N/mm²	70000		70000	

For life-time calculation use our homepage.

** referred to life-time*

Driving torque:

$$M_a = \frac{F * P * S_i}{2000 * \pi} + M_n$$

$$P_a = \frac{M_a * n}{9550}$$

F	= force	(N)
P	= pulley action perimeter	(mm)
Si	= safety factor 1,2 … 2	
M_n	= no-load torque	(Nm)
n	= rpm pulley	(min^{-1})
M_a	= driving torque	(Nm)
P_a	= motor power	(KW)

Deflection:

$$f = \frac{F * L^3}{E * I * 192}$$

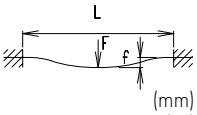

f	= deflection	(mm)
F	= load	(N)
L	= free length	(mm)
E	= elastic modulus 70000	(N/mm²)
I	= second moment of area	(mm⁴)

Linear system **QSSZ 60, 80**

Dimensions (mm)

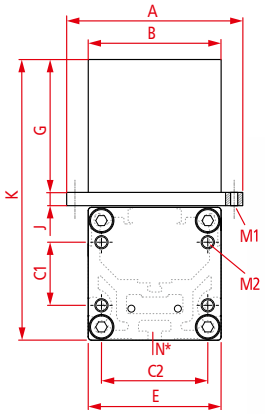

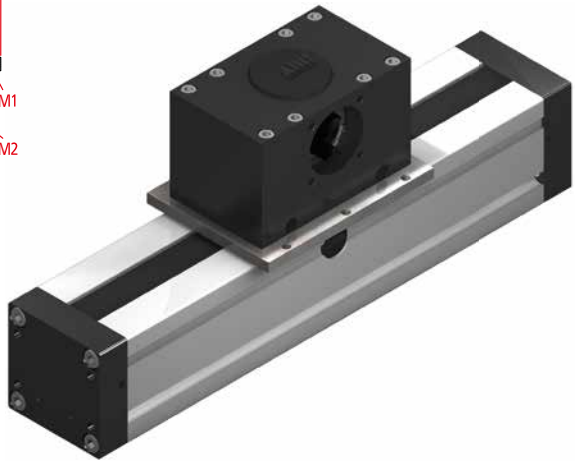

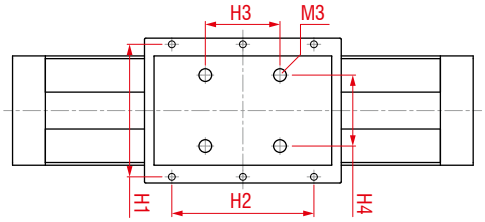

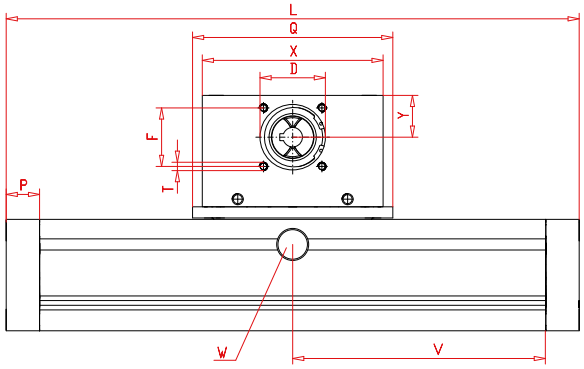

V = Q + 100 mm
W = servicing position

*For slide nuts refer to chapter 2.2 page 2

Size ❒	Basic length L	A	B	C1	C2	D -0,05	E	F	G	J	K	N for	P	Q	T	X	Y	Basic weight	Weight per 100 mm
QSSZ 60	168	60	60	28	48	37	60	32	65	7,50	134,5	M 5	20	124	M 5	110	20	3,30 kg	0,47 kg
QSSZ 80	200	106	80	38	62	47	80	42	80	8	169	M 6	24	144	M 6	130	30	5,90 kg	1,02 kg

0 **Choice of guide body profile:**
(0) Standard **(1)** corrosion-protected screws
(4) expanded corrosion-protected version
(depending on the availability of components)

Size	H1	H2	H3	H4	M1	M2	M3
QSSZ 60	---	---	60	45	---	M6	M8
QSSZ 80	97	104	---	---	M6	M8	---

0 **Choice of carriages:**

(0)

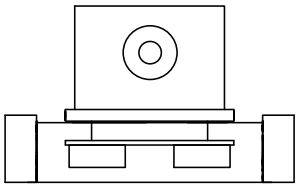

0 **Drive version:**

0

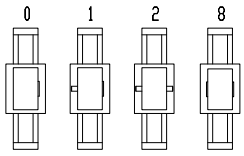

Size	Shaft ø h6 x length	Key
60	10 x 27	3x3x25
80	14 x 35	5x5x28

8 is as 0, but with coupling claws on both sides. The standard version is supplied without shaft. A shaft can be retrofitted by inserting it into the pulley bore and securing it with 2 locking rings.

Belt table / Coupling claw:

Code No.		Size	Belt	Pulley		Coupling
				mm/rev.	Number of teeth	
0	3	**60**	5M15	100	20	9
0	7	**80**	5M25	130	26	14

QSSZ	80	1	0	0	0	0	7	1	1500
	Pos.	1	2	3	4	5	6	7	

Basic length + stroke = total length

For additional accessories refer to chapter 2.2

Sample ordering code:
QSSZ80, standard body profile, standard carriage, coupling claw on one side, 1300 mm stroke

Linear system **QST/K 60, 80, 100**

SPINDLE DRIVES

CLEAN ROOM

PRECISION

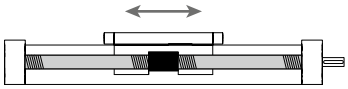

Fraunhofer TESTED DEVICE IPA
Bahr Modultechnik GmbH Positioningsystem QSK 80 Report No. BA 0610-367

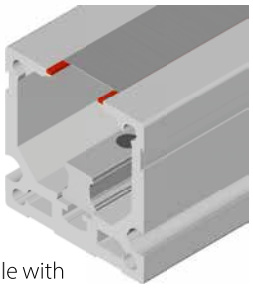

Function:
This unit consists of a square aluminium profile with an integrated ball rail. The carriage is driven by means of a rotating spindle with leading nut. The openings of the guide body are sealed by a stainless steel cover band to protect the drive from splash water and dust. In size 80, the cover tape is additionally secured with magnetic tapes (see detail picture, marked in red). High positioning and repeat accuracy. Inrestricted installation position, flexible use as a vertical axis in a gantry system with short lifting movements and higher loads. This linear unit is suitable for application in clean rooms of clean-room classification ISO class 1 (according to DIN EN ISO 14644-1).

7.1

Fitting position: As required, max. length 3000mm
Carriage connection: By T-slots
Unit mounting: By half round slots and tapped holes in the bearing blocks, mounting sets.

Forces and torques

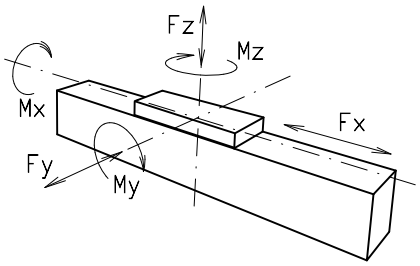

Size	QST/K 60		QST/K 80		QST/K 100	
permitted dyn. forces*	5000 km	10000 km	5000 km	10000 km	5000 km	10000 km
F_x (N)	900	800	2500	2000	5000	4000
F_y (N)	1415	1010	3570	2542	4082	2910
F_z (N)	3525	2510	8500	6050	10300	7360
M_x (Nm)	33	23	107	76	142	101
M_y (Nm)	190	143	604	430	838	597
M_z (Nm)	176	125	550	392	745	532

All forces and torques related to the following:

existing values / table values: $\frac{Fy}{Fy_{dyn}} + \frac{Fz}{Fz_{dyn}} + \frac{Mx}{Mx_{dyn}} + \frac{My}{My_{dyn}} + \frac{Mz}{Mz_{dyn}} \leq 1$

No-load torque			
Trapezoidal	18x4/18x8	24x5/24x10	32x6/32x12
Nm	0,6/0,7	0,6/0,8	1,5/1,7
Ballscrew	16x5/16x10	25x5/20x20/25x10	32x5/32x10
Nm	0,4/0,6	0,4/0,7/0,6	1,3/1,6
Geometrical moments of inertia of aluminium profile			
I_x mm^4	4,3x10^5	14,3x10^5	31,8x10^5
I_y mm^4	5,8x10^5	18,7x10^5	46,5x10^5
E-Modulus N/mm^2	70000	70000	70000

For life-time calculation use our homepage.

** referred to life-time*

Driving torque:

$$M_a = \frac{F * P * S_i}{2000 * \pi * \mu} + M_n$$

$$P_a = \frac{M_a * n}{9550}$$

F	= force	(N)
P	= thread pitch	(mm)
Si	= safety factor 1,2 … 2	
M_n	= no-load torque	(Nm)
n	= rpm of screw	(min^{-1})
M_a	= driving torque	(Nm)
μ	= screw efficiency	
P_a	= motor power	(KW)

Efficiency of lead screws:

All ballscrew		0,900
Tr	18x4	0,399
Tr	18x8	0,565
Tr	24x5	0,384
Tr	24x10	0,550
Tr	32x6	0,360
Tr	32x12	0,524

Deflection:

$$f = \frac{F * L^3}{E * I * 192}$$

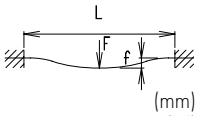

f	= deflection	(mm)
F	= load	(N)
L	= free length	(mm)
E	= elastic modulus 70000	(N/mm^2)
I	= second moment of area	(mm^4)

For the diagram for critical speeds of lead screws refer to chapter 4.2

Linear system **QST/K 60, 80, 100**

Dimensions (mm)

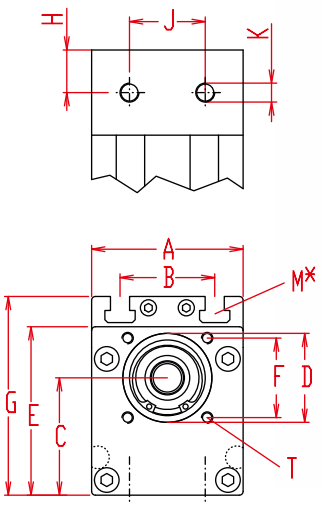

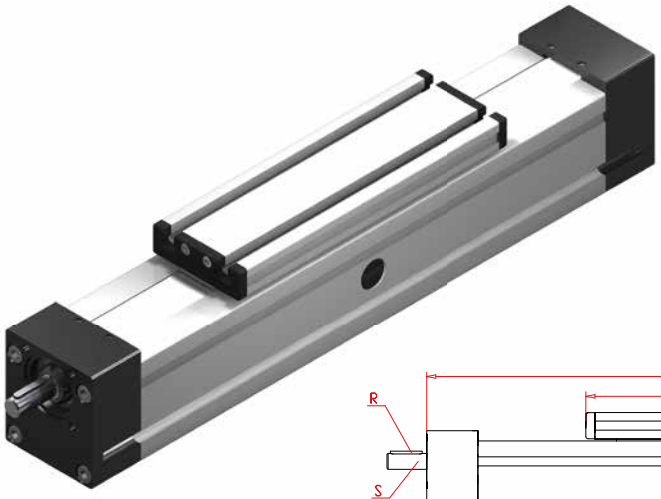

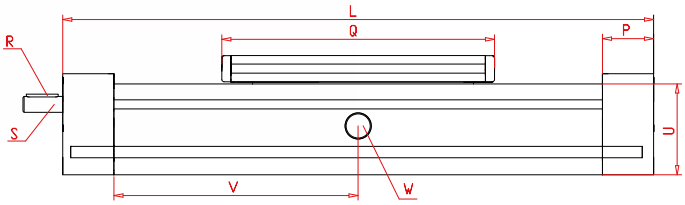

V = Q + 100 mm
W = servicing position

*For slide nuts refer to chapter 2.2 page 2

Increasing the carriage length will increase the basic length by the same amount.

Size ❒	Basic length L	A	B	C	D -0,05	E	F ❒	G	H	J	K	M for	P	Q	Shaft R Key	Shaft S Ø h6 x length	T for	U	Basic weight	Weight per 100 mm
QST/K 60	270	60	36	45	37	67	32	79	19	18	M6	M6	38	188	3x3x25	10 x 27	M5	60	4,1 kg	0,5 kg
QST/K 80	350	80	50	62	47	89	42	106	22,5	40	M10	M8	45	250	5x5x28	14 x 35	M6	80	7,5 kg	0,9 kg
QST/K 100	410	100	66	75	68	112	60	129	28,5	50	M10	M10	57	288	6x6x40	22 x 45	M8	100	14,8 kg	1,3 kg

7.1

K **Spindle:**
(T) Trapezoidal thread **(K)** Ballscrew

1 **Selection of screw:**
(1) right hand (Standard) **(2)** left hand (Ballscrew by inquiry)

0 **Choice of carriage:**

(0)

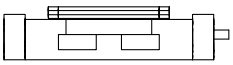

(1)

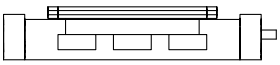

Size	Version 1	
	Q	L
60	255	350
80	336	436
100	383	510

0 **Drive version:**
(0) one shaft (locating bearing side) **(1)** one shaft (non-locating bearing side) **(2)** shaft on both sides

0 **Selection of screw:**

Size	Standard	Multistart screw	Standard	Multistart screw		
	Trapezoidal thread		Ballscrew			
60	**(0)** Tr 18x4	**(1)** Tr 18x8	**(0)** Kg 16x5	**(1)** Kg 16x10	**(2)** Kg 16x16	
80	**(0)** Tr 24x5	**(1)** Tr 24x10	**(0)** Kg 25x5	**(1)** Kg 20x20	**(2)** Kg 25x10	**(3)** Kg 25x25***
100	**(0)** Tr 32x6	**(1)** Tr 32x12	**(0)** Kg 32x5	**(1)** Kg 32x10	**(2)** Kg 32x32 *	**(3)** Kg 32x20**

** = Basic and carriage length (L and Q) increase over 47 mm*
***= Basic and carriage length (L and Q) increase over 11 mm*
**** = Basic and carriage length (L and Q) increase over 42 mm*

0 **Choice of guide body profile:**
(0) Standard **(1)** corrosion-protected screws

0 **Ballscrew pitch accuracy:**
(0) 0,05 mm / 300 mm (Standard) **(2)** 0,025 mm / 300 mm

0 **End play of ball nut:**
(0) 0,04 mm (Standard) **(1)** < 0,02 mm **(2)** 2% apply prestress

QS	K	80	1	0	0	0	0	0	0	1500
		Pos.	1	2	3	4	5	6	7	

Basic length + stroke = total length

For additional accessories refer to chapter 2.2

Sample ordering code:
QSK80, ballscrew right hand thread, standard carriage, one shaft (locating bearing side), spindle 25x5, 1150 mm stroke.

Linear system **QST/K 60, 80, 100**

SPINDLE DRIVEN RIGHT-HAND | LEFT-HAND | DIVIDED SPINDLE

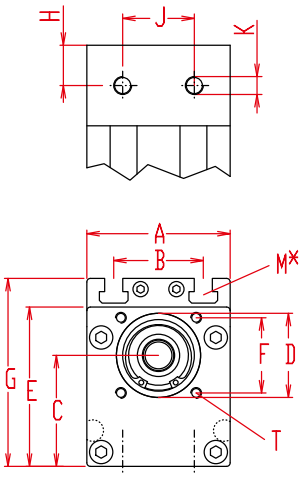

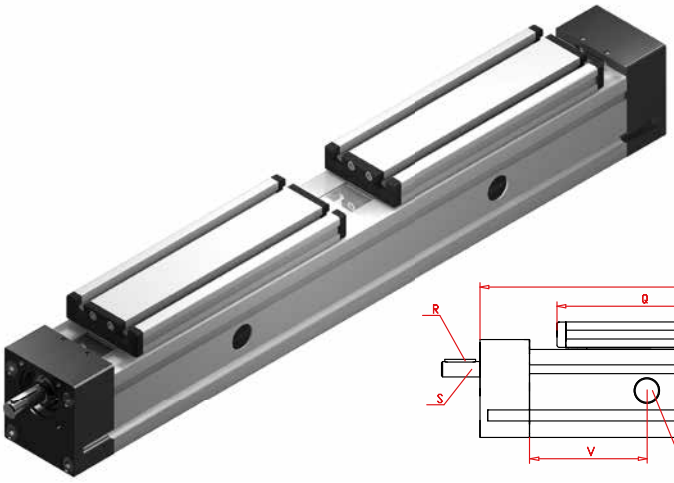

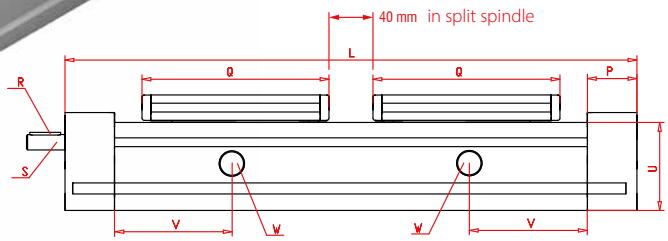

*For slide nuts refer to chapter 2.2 page 2

Increasing the carriage length will increase the basic length by the same amount.

Size ❒	Basic length L selection of screw		A	B	C	D -0,05	E	F ❒	G	H	J	K	M for	P	Q	Shaft		T for	U	Basic weight	Weight per 100 mm
	3	4														R Key	S Ø h6 x length				
QST/K 60	460	500	60	36	45	37	67	32	79	19	18	M6	M6	38	188	3x3x25	10 x 27	M5	60	5,4 kg	0,5 kg
QST/K 80	600	640	80	50	62	47	89	42	106	22,5	40	M10	M8	45	250	5x5x28	14 x 35	M6	80	9,8 kg	0,9 kg
QST/K 100	700	740	100	66	75	68	112	60	129	28,5	50	M10	M10	57	288	6x6x40	22 x 45	M8	100	18,6 kg	1,3 kg

V = Q + 100 mm
W = servicing position

K **Spindle:**
(T) Trapezoidal thread **(K)** Ballscrew

3 **Selection of screw:**
(3) right - left hand **(4)** divided spindle

0 **Choice of carriage:**

(0)

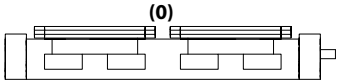

(1)

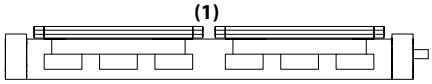

Size	Carriage version 1		
	Q	Basic length L selection of spindle	
		3	4
60	255	590	630
80	336	770	810
100	383	890	930

0 **Drive version:**
(0) shaft right hand thread **(1)** shaft left hand thread **(2)** shaft on both sides

0

Selection of screw:	Size	Standard	Multistart screw	
Ballscrew right hand	60	**(0)** 16x5	**(1)** 16x10*	**(2)** 16x16*
	80	**(0)** 25x5	**(1)** 20x20*	**(2)** 25x10*
	100	**(0)** 32x5	**(1)** 32x10*	**(2)** 32x32**
Ballscrew left hand	auf Anfrage			
Trapezoidal right hand thread	60	**(0)** 18x4	**(1)** 18x8	
	80	**(0)** 24x5	**(1)** 24x10	
	100	**(0)** 32x6	**(1)** 32x12	
Trapezoidal left hand thread	60	**(0)** 18x4	**(1)** 18x8	
	80	**(0)** 24x5	**(1)** 24x10	
	100	**(0)** 32x6	**(1)** 32x12	* = only for selection of divided spindle

** = only for selection of divided spindle, Basic and carriage length (L and Q) increase over 94 mm

0 **Choice of guide body profile:**
(0) Standard **(1)** corrosion-protected screws
(4) expanded corrosion-protected version (depending on the availability of components)

0 **Ballscrew pitch accuracy:**
(0) 0,05 mm / 300 mm (Standard) **(2)** 0,025 mm / 300 mm

0 **End play of ball nut:**
(0) 0,04 mm (Standard) **(1)** < 0,02 mm **(2)** 2% apply prestress

QS	K	80	3	0	0	0	0	0	0	1500
		Pos.	1	2	3	4	5	6	7	

Basic length + stroke = total length

Sample ordering code:
QSK80, ballscrew right - left hand thread, standard carriage, shaft on right hand thread, spindle 25x5, 860 mm stroke.

BAHR Modultechnik
EDELSTAHL Rost frei
TÜV NORD
AEO

Possible combinations and mounting styles

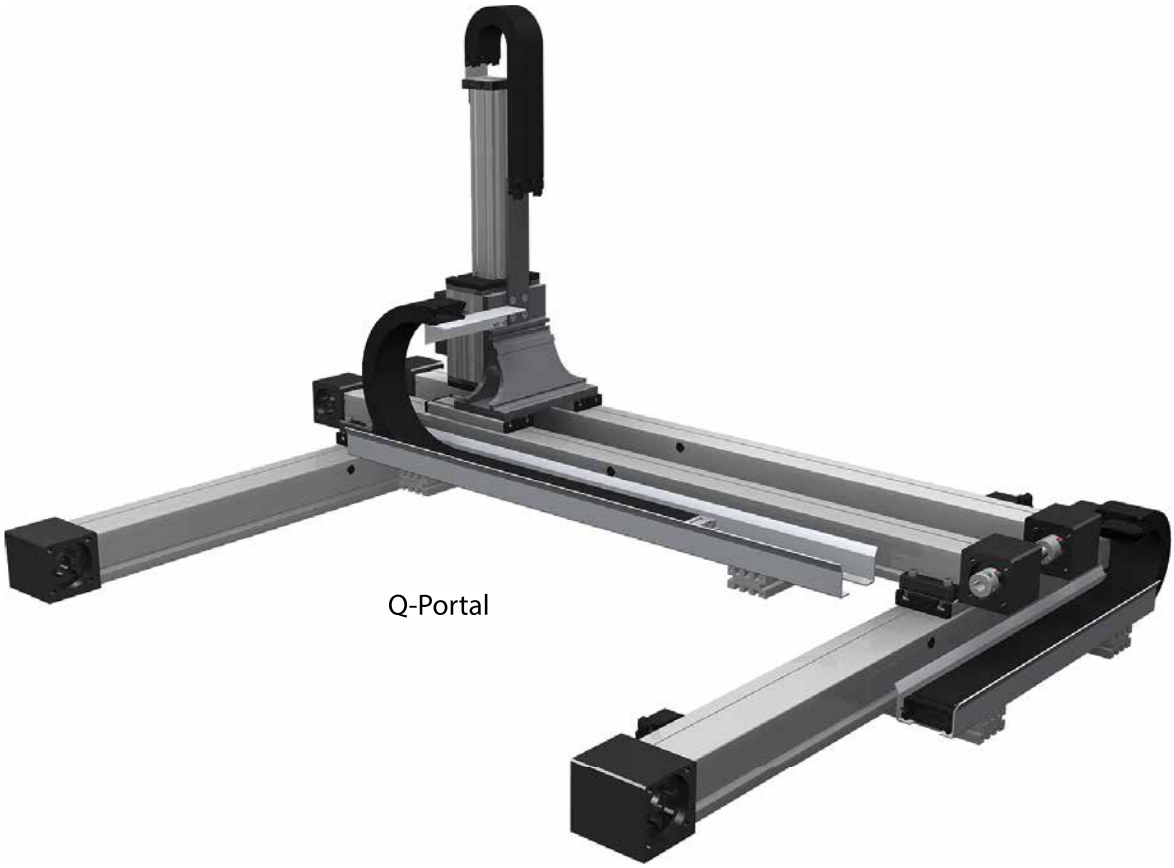

Q-Portal

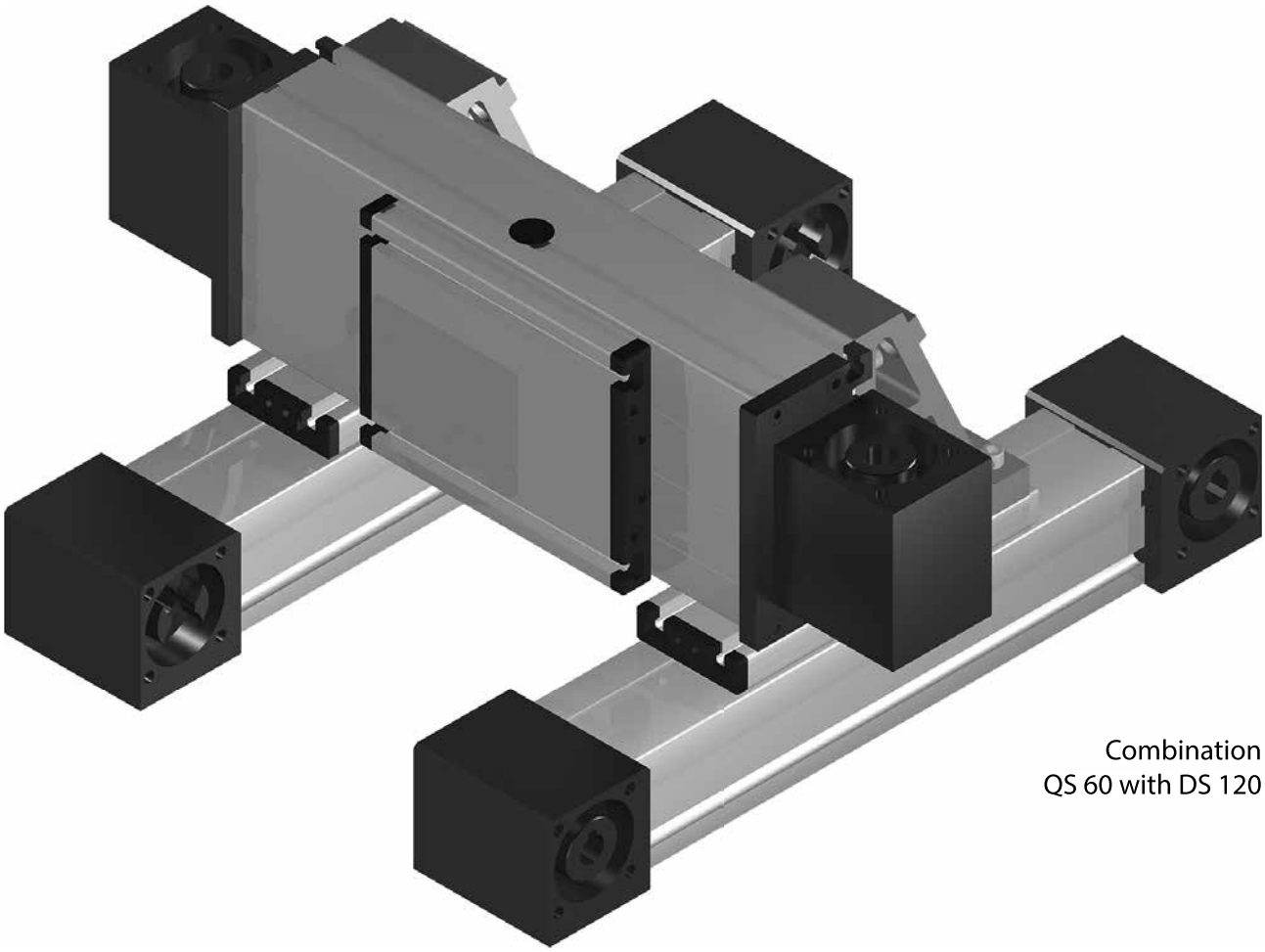

Combination
QS 60 with DS 120

Linear system **QSR 60, 80, 100, 125**

RAIL GUIDE

- WITHOUT DRIVE
- SUPPORT UNIT
- WITHOUT COVERBAND

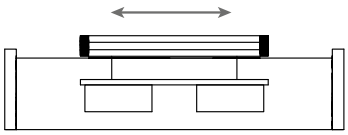

Function:
This unit consists of a square aluminium profile with an integrated ball rail. This unit can be driven by a pneumatic cylinder or other additional drives or it serves as a load carrying slide unit. Construction compatible with QSZ.

Fitting position: As required. Max. length 6.000 mm without joints.
Carriage mounting: By T-slots.
Unit mounting: By T-slots and mounting sets. The linear axis can be combined with any T-slot profile.
Carriage support: In the standard version, the carriage runs on two runner blocks which can be adjusted and serviced at a central servicing position. For longer carriages the number of runner blocks can be increased.

Forces and torques

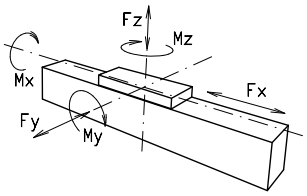

Size	60		80		100		125	
permitted dyn. forces*	5000 km	10000 km	5000 km	10000 km	5000 km	10000 km	5000 km	10000 km
F_x (N)	-	-	-	-	-	-	-	-
F_y (N)	1410	990	3570	2550	4080	2900	6892	5470
F_z (N)	3520	2500	8500	6050	10300	7270	17205	13659
M_x (Nm)	33	23	107	75	142	101	288	228
M_y (Nm)	104	73	310	222	439	311	1110	881
M_z (Nm)	100	70	296	210	412	292	1012	803

All forces and torques related to the following:

existing values / table values: $\frac{Fy}{Fy_{dyn}} + \frac{Fz}{Fz_{dyn}} + \frac{Mx}{Mx_{dyn}} + \frac{My}{My_{dyn}} + \frac{Mz}{Mz_{dyn}} \leq 1$

Speed				
(m/s) max	5	5	5	5
Geometrical moments of inertia of aluminium profile				
I_x mm^4	4,3x10^5	14,3x10^5	31,8x10^5	74,9x10^5
I_y mm^4	5,8x10^5	18,7x10^5	46,5x10^5	106,5x10^5
Elastic modulus N/mm^2	70000	70000	70000	70000

For life-time calculation use our homepage.

** referred to life-time*

Deflection:

$$f = \frac{F * L^3}{E * I * 192}$$

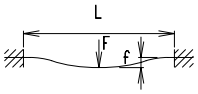

f = deflection (mm)
F = load (N)
L = free length (mm)
E = elastic modulus 70000 (N/mm^2)
I = second moment of area (mm^4)

Linear system **QSR 60, 80, 100, 125**

Dimensions (mm)

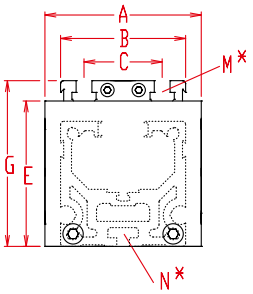

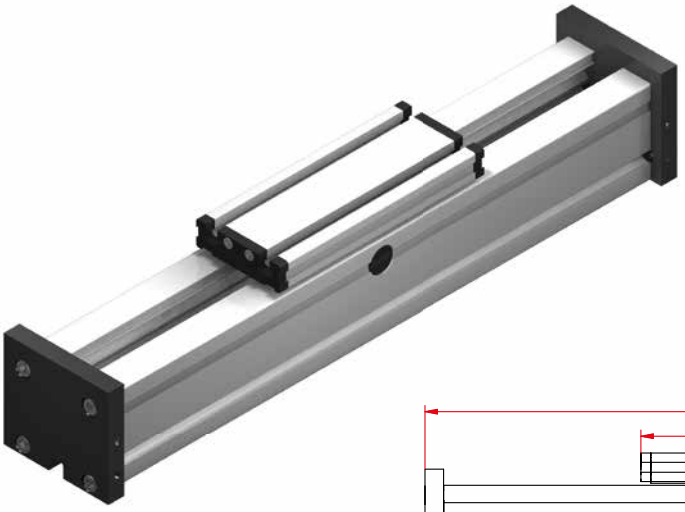

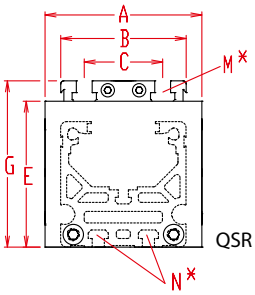

QSR 125

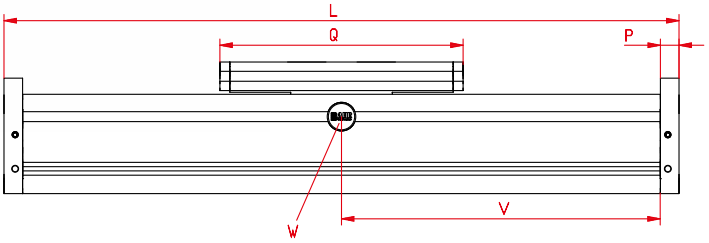

V = Q + 100 mm
W = servicing position

*For slide nuts refer to chapter 2.2 page 2

Increasing the carriage length will increase the basic length by the same amount.

Size ❒	Basic length L	A	B	C	E	G	N for	M for	P	Q	Basic weight	Weight per 100 mm
QSR 60	205	80	60	36	60	79	M 5	M 6	12	177	1,8 kg	0,53 kg
QSR 80	270	100	80	50	93	106	M 6	M 8	17	232	4,9 kg	0,92 kg
QSR 100	315	130	100	66	110	129	M 10	M 10	20	268	8,2 kg	1,41 kg
QSR 125	360	160	125	82	134,5	157,5	M 10	M 12	25	300	15,1 kg	2,12 kg

0 **Choice of guide body profile:**
(0) Standard **(1)** corrosion-protected screws
(4) expanded corrosion-protected version (depending on the availability of components)

0 **Choice of carriages:**

(0)

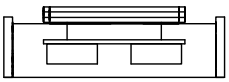

(1)

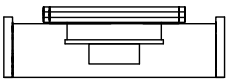

Size	Version 0		Version 1	
	Q	L	Q	L
60	177	205	152	180
80	232	270	196	240
100	268	315	260	310
125	300	360	260	320

QSR	80	0	0	0	0	0	0	0	1500
	Pos.	1	2	3	4	5	6	7	

Basic length + stroke = total length

For additional accessories refer to chapter 2.2

Sample ordering code:
QSR80 with standard body profile, standard carriage and 1230 mm stroke

Linear system **QSSR 60, 80, 100**

RAIL GUIDE

- WITHOUT DRIVE
- SUPPORT UNIT
- WITH COVERBAND

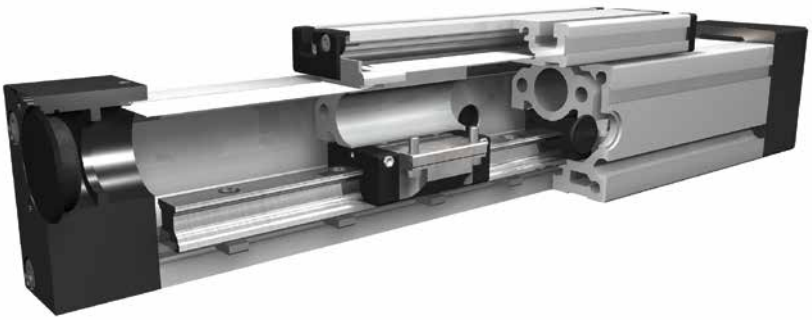

Function:
This unit consists of a square aluminium profile with an integrated ball rail. The carriage is with leading nut and without drive. The openings of the guide body are covered by a stainless steel cover band to protect the system from splash water and dust. Construction compatible with QST / QSK.

Fitting position: As required, max. length 6.000mm
Carriage connection: By T-slots
Unit mounting: By half round slots and tapped holes in the bearing blocks, mounting sets.

7.1

Forces and torques

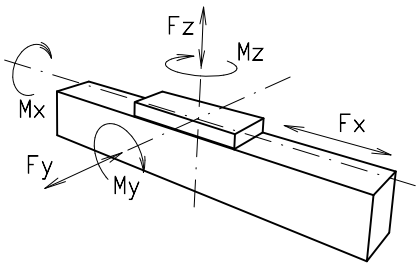

Size	QSSR 60		QSSR 80		QSSR 100	
permitted dyn. forces*	5000 km	10000 km	5000 km	10000 km	5000 km	10000 km
F_y (N)	1410	990	3570	2550	4080	2900
F_z (N)	3520	2500	8500	6050	10300	7270
M_x (Nm)	33	23	107	75	142	101
M_y (Nm)	190	143	604	430	838	597
M_z (Nm)	176	125	550	392	745	532

All forces and torques related to the following:

existing values / table values: $\frac{Fy}{Fy_{dyn}} + \frac{Fz}{Fz_{dyn}} + \frac{Mx}{Mx_{dyn}} + \frac{My}{My_{dyn}} + \frac{Mz}{Mz_{dyn}} \leq 1$

Geometrical moments of inertia of aluminium profile			
I_x mm^4	$4{,}3 \times 10^5$	$14{,}3 \times 10^5$	$31{,}8 \times 10^5$
I_y mm^4	$5{,}8 \times 10^5$	$18{,}7 \times 10^5$	$46{,}5 \times 10^5$
E-Modulus N/mm^2	70000	70000	70000

For life-time calculation use our homepage.

** referred to life-time*

Deflection:

$$f = \frac{F * L^3}{E * I * 192}$$

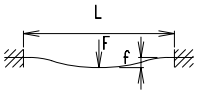

f = deflection (mm)
F = load (N)
L = free length (mm)
E = elastic modulus 70000 (N/mm^2)
I = second moment of area (mm^4)

Linear system **QSSR 60, 80, 100**

Dimensions (mm)

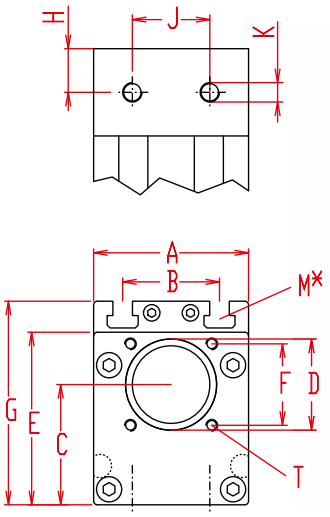

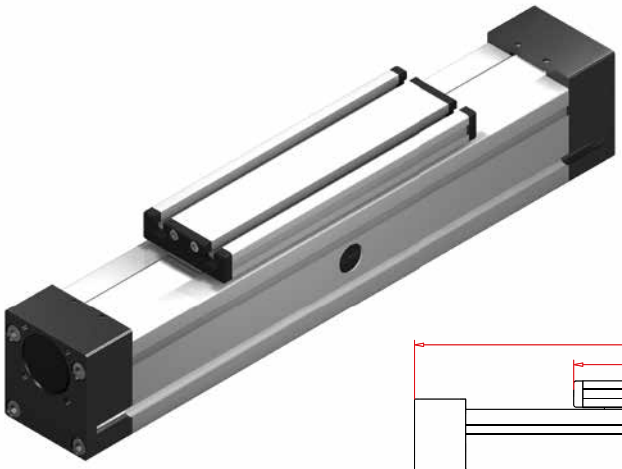

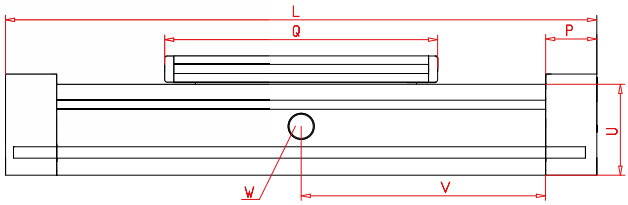

V = Q + 100 mm
W = servicing position

*For slide nuts refer to chapter 2.2 page 2

Increasing the carriage length will increase the basic length by the same amount.

Size ❒	Basic length L	A	B	C	D -0,05	E	F ❒	G	H	J	K	M for	P	Q	T for	U	Basic weight	Weight per 100 mm
QSSR 60	270	60	36	45	37	67	32	79	19	18	M6	M6	38	188	M5	60	3,1 kg	0,3 kg
QSSR 80	350	80	50	62	47	89	42	106	22,5	40	M10	M8	45	250	M6	80	5,7 kg	0,8 kg
QSSR 100	410	100	66	75	68	112	60	129	28,5	50	M10	M10	57	288	M8	100	10,2 kg	1,2 kg

0 **Choice of guide body profile:**
(0) Standard **(1)** corrosion-protected screws
(4) expanded corrosion-protected version (depending on the availability of components)

0 **Choice of carriage:**

(0)

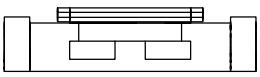

(1)

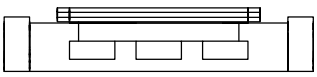

Size	Carriage version 1	
	Q	Basic length L
60	255	350
80	336	436
100	383	510

QSSR	80	0	0	0	0	0	0	0	1500
	Pos.	1	2	3	4	5	6	7	

Basic length + stroke = total length

For additional accessories refer to chapter 2.2

Sample ordering code:
QSSR80 with standard body profile, standard carriage, 1150 mm stroke.

Linear system **QSRZ 60, 80, 100, 125**

RAIL GUIDE

- WITHOUT DRIVE
- SUPPORT UNIT
- WITHOUT COVERBAND

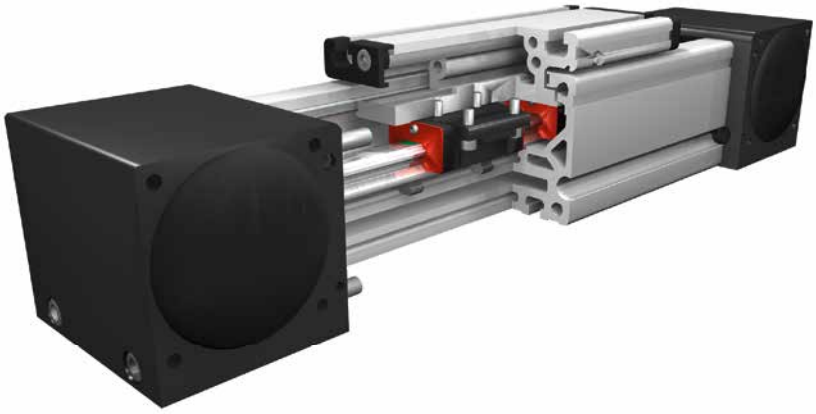

Function:
This unit consists of a square aluminium profile with an integrated ball rail. The carriage is with leading nut and without drive. Construction compatible with QSZ.

Fitting position: As required, max. length 6.000mm
Carriage connection: By T-slots
Unit mounting: By half round slots and tapped holes in the bearing blocks, mounting sets.

Forces and torques

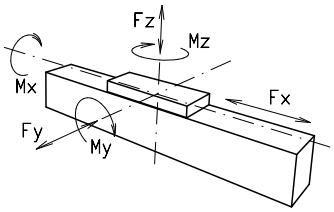

Size	QSRZ 60		QSRZ 80		QSRZ 100		QSRZ 125	
permitted dyn. forces*	5000 km	10000 km	5000 km	10000 km	5000 km	10000 km	5000 km	10000 km
F_y (N)	1410	990	3570	2550	4080	2900	6892	5470
F_z (N)	3520	2500	8500	6050	10300	7270	17205	13659
M_x (Nm)	33	23	107	75	142	101	288	228
M_y (Nm)	104	73	310	222	439	311	1110	881
M_z (Nm)	100	70	296	210	412	292	1012	803

All forces and torques related to the following:

existing values / table values

$$\frac{Fy}{Fy_{dyn}} + \frac{Fz}{Fz_{dyn}} + \frac{Mx}{Mx_{dyn}} + \frac{My}{My_{dyn}} + \frac{Mz}{Mz_{dyn}} \leq 1$$

Geometrical moments of inertia of aluminium profile				
I_x mm^4	$4{,}3 \times 10^5$	$14{,}3 \times 10^5$	$31{,}8 \times 10^5$	$74{,}9 \times 10^5$
I_y mm^4	$5{,}8 \times 10^5$	$18{,}7 \times 10^5$	$46{,}5 \times 10^5$	$106{,}5 \times 10^5$
E-Modulus N/mm^2	70000	70000	70000	70000

For life-time calculation use our homepage.

** referred to life-time*

Deflection:

$$f = \frac{F * L^3}{E * I * 192}$$

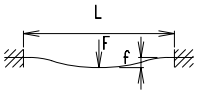

f = deflection (mm)
F = load (N)
L = free length (mm)
E = elastic modulus 70000 (N/mm^2)
I = second moment of area (mm^4)

Linear system **QSRZ 60, 80, 100, 125**

Dimensions (mm)

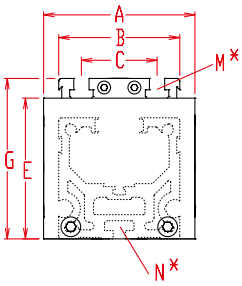

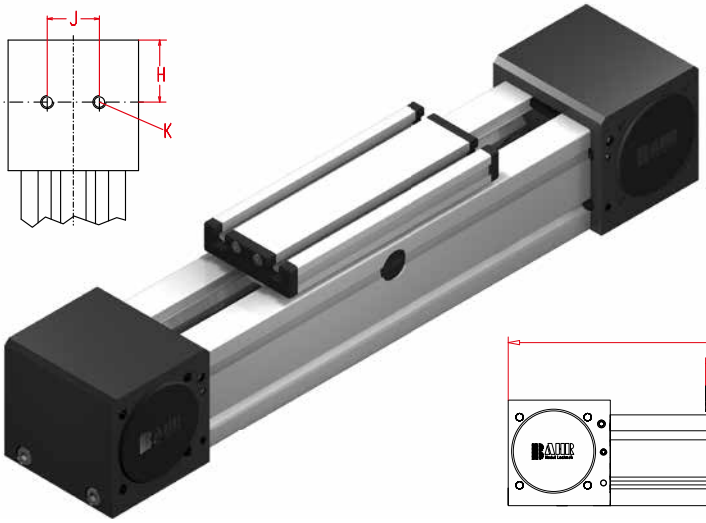

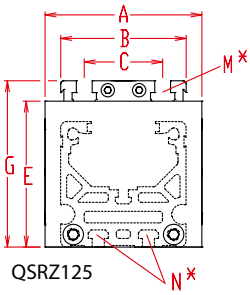

QSRZ125

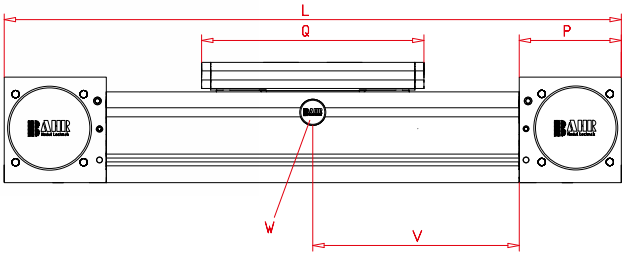

V = Q + 100 mm
W = servicing position

*For slide nuts refer to chapter 2.2 page 2

Increasing the carriage length will increase the basic length by the same amount.

Size ❒	Basic length L	A	B	C	E	G	H	J	K	N for	M for	P	Q	Basic weight	Weight per 100 mm
QSRZ 60	300	80	60	36	63	79	29,5	30	M 8	M 5	M 6	59	177	3,5 kg	0,55 kg
QSRZ 80	430	100	80	50	93	106	47,5	40	M 10	M 6	M 8	90	232	10,4 kg	0,96 kg
QSRZ 100	510	130	100	66	110	129	55	50	M 12	M 10	M 10	110	268	15,9 kg	1,47 kg
QSRZ 125	570	160	125	82	134,5	157,5	65	60	M 12	M 10	M 12	130	300	30,5 kg	2,21 kg

0 **Choice of guide body profile:**
(0) Standard **(1)** corrosion-protected screws
(4) expanded corrosion-protected version (depending on the availability of components)

0 **Choice of carriages:**

Size	Version 0		Version 1		Version 2		Version 3	
	Q	L	Q	L	Q	L	Q	L
60	177	300	152	280	242	370	302	430
80	232	430	196	390	312	510	390	585
100	268	510	260	500	362	610	448	690
125	300	570	260	530	365	635	467	740

QSRZ	80	0	0	0	0	0	0	0	1500
	Pos.	1	2	3	4	5	6	7	

Basic length + stroke = total length

For additional accessories refer to chapter 2.2

Sample ordering code:
QSRZ80 with standard body profile, standard carriage, coupling claw on one side, 1070 mm stroke

Possible mounting styles

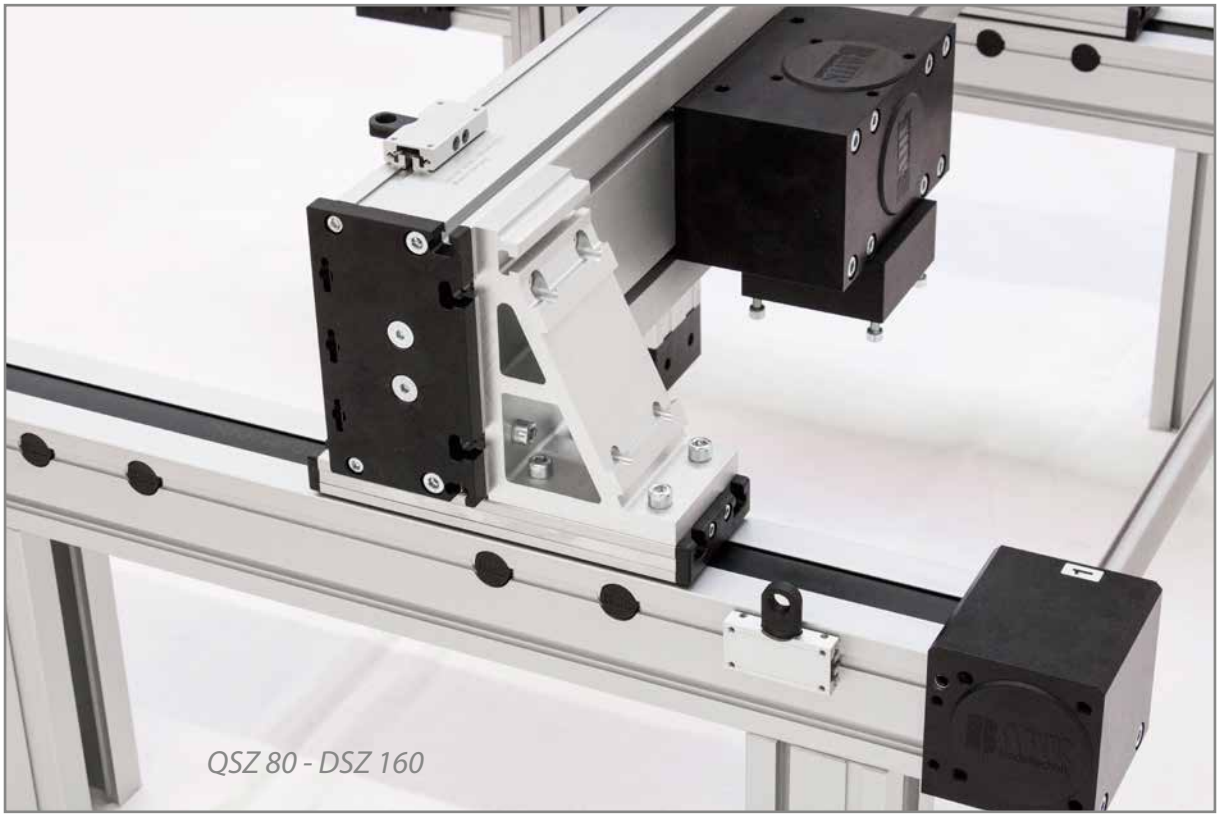

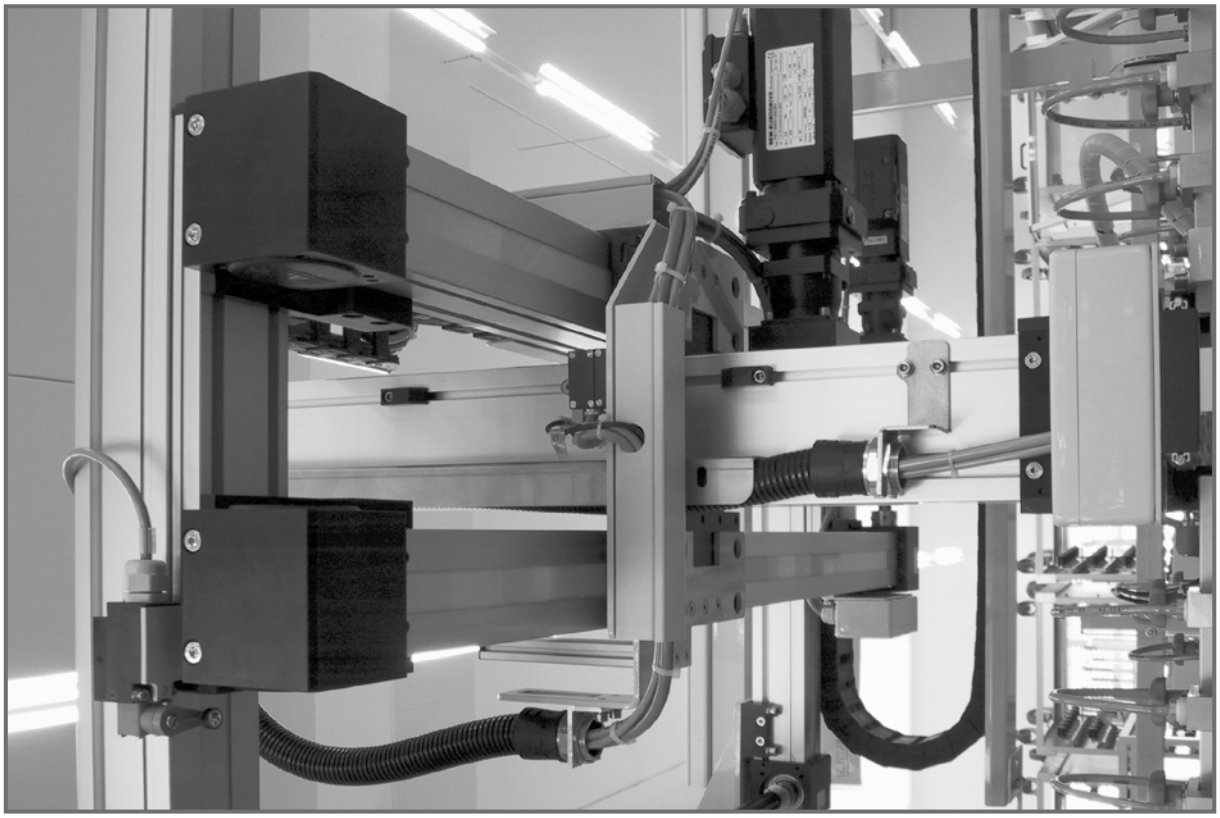

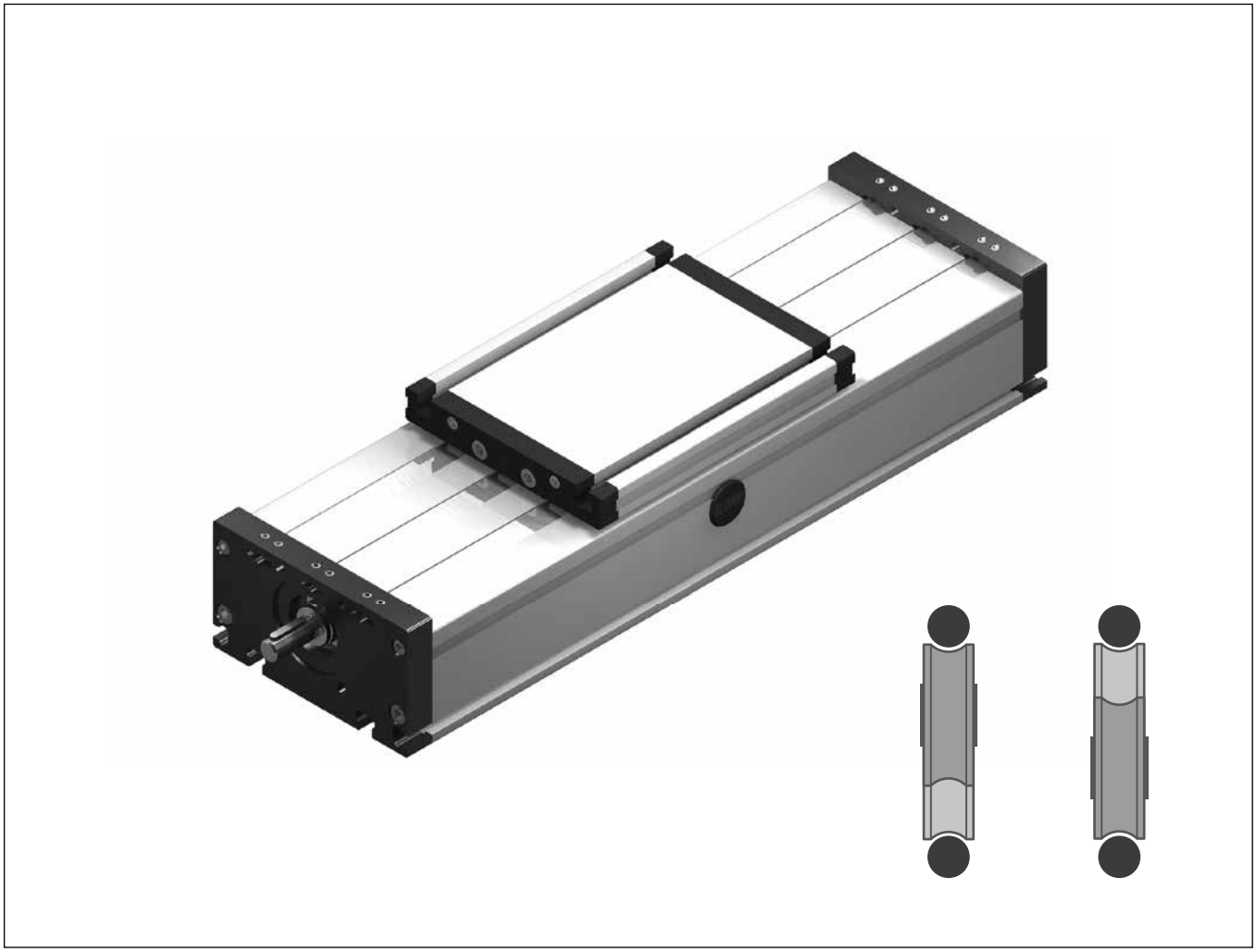

DL
Roller guide

Linear system **DLT/DLK 120, 160, 200**

SPINDLE DRIVE

- INDEPENDENT INSTALLATION POSITION
- PRECISION
- UNIVERSAL SYSTEM

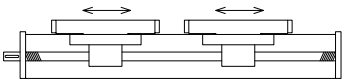

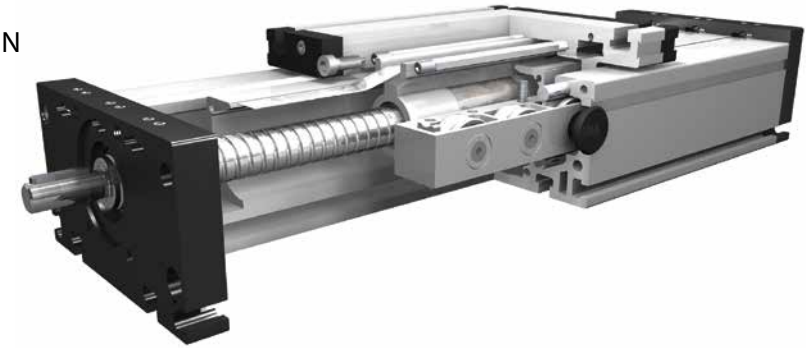

Function:
This unit consists of a rectangular aluminium profile with 2 integrated roller guides. The carriage is driven by means of a rotating spindle with leading nut. Where two parallel linear units are used or where two carriages are mounted on one unit, the leading-nut receiver can be used to adjust the symmetry of the carriages. The openings of the guide body are sealed with 3 stainless steel cover bands to protect the drive from splash water and dust.

Fitting position: As required. Max. length 3.000 mm without joints.
Carriage mounting: By T-slots.
Unit mounting: By T-slots and mounting sets. The linear axis can be combined with any T-slot profile.
Carriage support: In the standard version, the carriage runs on 8 rollers which can be adjusted and serviced at a central servicing position. For longer carriages the number of rollers can be increased. Repeatability ballscrew ± 0,025 mm, trapezoidal thread ± 0,2 mm.

Forces and torques

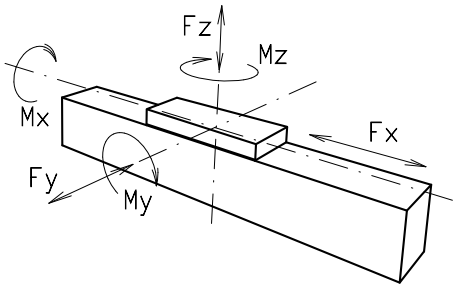

Size	120		160		200	
Forces/Torques	static	dynamic	static	dynamic	static	dynamic
F_x (N)	900	800	5000	4000	10000	8000
F_y (N)	1100	900	3000	2000	4400	3100
F_z (N)	1250	1000	3500	2800	4900	4400
M_x (Nm)	150	125	400	320	600	510
M_y (Nm)	140	120	360	300	560	480
M_z (Nm)	100	90	180	150	310	275

All forces and torques related to the following:

existing values / table values: $\frac{Fy}{Fy_{dyn}} + \frac{Fz}{Fz_{dyn}} + \frac{Mx}{Mx_{dyn}} + \frac{My}{My_{dyn}} + \frac{Mz}{Mz_{dyn}} \leq 1$

No-load torque						
Trapezoidal thread	18 x 4	18 x 8	24 x 5	24 x 10	32 x 6	32 x 12
(Nm)	0,6	0,9	0,6	0,9	0,9	1,1
Ballscrew	16 x 5	16 x 10	25 x 5	20 x 20	32 x 5	32 x 10
(Nm)	0,5	0,8	0,5	0,8	0,7	0,9

Geometrical moments of inertia of aluminium profile			
I_x mm^4	6,6x10^5	22,2x10^5	63,8x10^5
I_y mm^4	38,6x10^5	122,0x10^5	335,0x10^5
Elastic modulus N/mm^2	70000	70000	70000

For life-time calculation of rollers use our homepage.

Driving torque:

$$M_a = \frac{F * P * S_i}{2000 * \pi * \mu} + M_n$$

$$P_a = \frac{M_a * n}{9550}$$

F	= force	(N)
P	= thread pitch	(mm)
Si	= safety factor 1,2 … 2	
M_n	= no-load torque	(Nm)
n	= rpm of screw	(min^{-1})
M_a	= driving torque	(Nm)
μ	= screw efficiency	
P_a	= motor power	(KW)

Efficiency of lead screws:

All ballscrew		0,900
Tr	18x4	0,399
Tr	18x8	0,565
Tr	24x5	0,384
Tr	24x10	0,550
Tr	32x6	0,360
Tr	32x12	0,524

Deflection:

$$f = \frac{F * L^3}{E * I * 192}$$

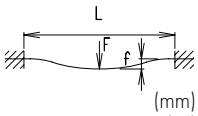

f = deflection	(mm)
F = load	(N)
L = free length	(mm)
E = elastic modulus 70000	(N/mm^2)
I = second moment of area	(mm^4)

For the diagram for critical speeds of lead screws refer to chapter 4.2

Linear system **DLT/DLK 120, 160, 200**

Dimensions (mm)

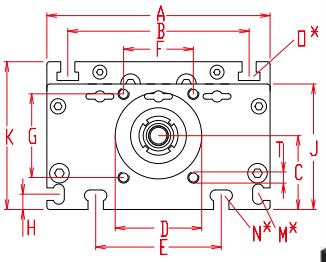

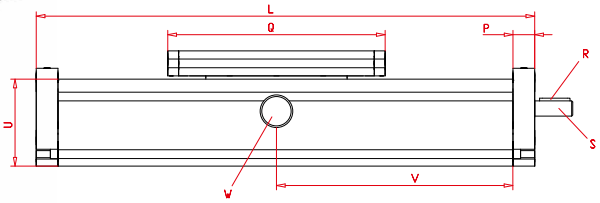

V = Q + 100 mm
W = servicing position

*For slide nuts refer to chapter 2.2 page 2

Increasing the carriage length will increase the basic length by the same amount.

Size	Basic length L	A	B	C	D +0,1 +0,05	E	F	G	H	J	K	M for	N for	O for	P	Q	Shaft R Key	Shaft S Ø h6 x length	T	U	Basic weight	Weight per 100 mm
DL 120	200	120	96	39	47	78	42	42	10	68	79	M 5	M 6	M 6	15	156	3x3x25	10 x 27	M 6	60	3,9 kg	0,92 kg
DL 160	260	160	130	53	62	90	50	60	11	90	106	M 6	M 8	M 8	20	200	5x5x28	14 x 35	M 8	80	8,2 kg	1,96 kg
DL 200	320	200	160	66	68	140	60	60	15	110	129	M 8	M10	M10	20	270	6x6x40	22 x 45	M 8	100	19,6 kg	2,82 kg

T **Spindle:**
(T) Trapezoidal thread **(K)** Ballscrew

1 **Selection of screw:**
(1) right hand **(2)** left hand (Ballscrew by inquiry)

0 **Choice of guide body profile:** Stainless versions upon request.

(0)

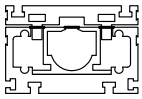

internal profile
with cover bands

0 **Choice of carriages:**

(0) **(2)** **(3)**

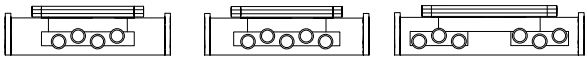

Size	Version 0 Q	Version 0 L	Version 2 Q	Version 2 L	Version 3 Q	Version 3 L
120	156	200	196	240	>236	>280
160	200	260	250	310	>300	>360
200	270	320	330	380	>410	>460

0 **Drive version:**
(0) one shaft (locating bearing side) **(1)** one shaft (non-locating bearing side) **(2)** shaft on both sides

0

Selection of screw:	**Size**	**Standard**	**Multistart screw**			
Ballscrew right hand	120	**(0)** 16x5	**(1)** 16x10	**(2)** 16x16	**(3)** 20x20	**(4)** 25x5	**(5)** 25x10
	160	**(0)** 25x5	**(1)** 20x20	**(2)** 25x10	**(3)** 25x25		
	200	**(0)** 32x5	**(1)** 32x10	**(2)** 32x20	**(3)** 32x32		
Ballscrew left hand	upon request					
Trapezoidal right hand thread	120	**(0)** 18x4	**(1)** 18x8			
	160	**(0)** 24x5	**(1)** 24x10			
	200	**(0)** 32x6	**(1)** 32x12			
Trapezoidal left hand thread	120	**(0)** 18x4	**(1)** 18x8			
	160	**(0)** 24x5	**(1)** 24x10			
	200	**(0)** 32x6	**(1)** 32x12			

0 **Ballscrew pitch accuracy:**
(0) 0,05 mm / 300 mm (Standard) **(2)** 0,025 mm / 300 mm

0 **End play of ball nut:**
(0) 0,04 mm (Standard), **(1)** < 0,02 mm, **(2)** 2% apply prestress

Repeatability:
± 0,2 mm Trapezoidal
± 0,025 mm Ballscrew

DL	T	160	1	0	0	0	0	0	0	1500
		Pos.	1	2	3	4	5	6	7	

Basic length + stroke = total length

Sample ordering code:
DLT160, trapezoidal right hand thread, with internal profile and cover bands, standard carriage, one shaft (locating bearing side), spindle 24x5, 1240 mm stroke.

Linear system **DLT/DLK 120, 160, 200**

SPINDLE DRIVE, RIGHT-HAND / LEFT-HAND THREAD OR DIVIDED SPINDLES

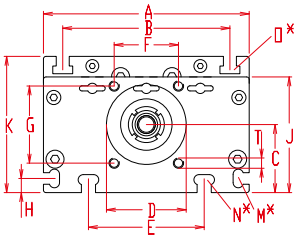

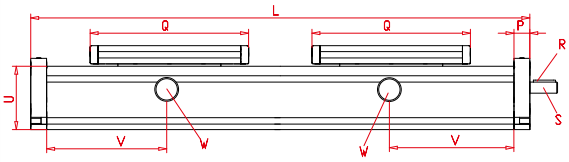

V = Q + 100 mm
W = servicing position
*For slide nuts refer to chapter 2.2 page 2

Increasing the carriage length will increase the basic length by the same amount.

Size	Basic length L	A	B	C	D +0,1 +0,05	E	F	G	H	J	K	M for	N for	O for	P	Q	Shaft R Key	Shaft S Ø h6 x length	T	U	Basic weight	Weight per 100 mm
DL 120	360	120	96	39	47	78	42	42	10	68	79	M 5	M 6	M 6	15	156	3x3x25	10 x 27	M 6	60	5,1 kg	0,92 kg
DL 160	470	160	130	53	62	90	50	60	11	90	106	M 6	M 8	M 8	20	200	5x5x28	14 x 35	M 8	80	12,0 kg	1,96 kg
DL 200	590	200	160	66	68	140	60	60	15	110	129	M 8	M10	M10	20	270	6x6x40	22 x 45	M 8	100	27,1 kg	2,82 kg

T **Spindle:**
(T) Trapezoidal thread **(K)** Ballscrew

3 **Selection of screw:**
(3) right - left hand **(4)** divided spindle

0 **Choice of guide body profile:** Stainless versions upon request.

(0)

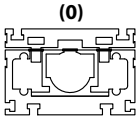

internal profile
with cover bands

0 **Choice of carriages:**

(0)

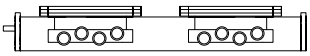

(2)

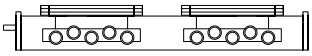

(3)

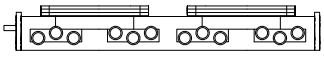

Size	Version 0 Q	Version 0 L	Version 2 Q	Version 2 L	Version 3 Q	Version 3 L
120	156	360	196	440	>236	>530
160	200	470	250	570	>300	>670
200	270	600	330	720	>410	>880

0 **Drive version:**
(0) shaft right hand thread **(1)** shaft left hand thread **(2)** shaft on both sides

0

Selection of screw:	Size	Standard	Multistart screw				
Ballscrew right hand	120	**(0)** 16x5	**(1)** 16x10*	**(2)** 16x16*	**(3)** 20x20*	**(4)** 25x5*	**(5)** 25x10*
	160	**(0)** 25x5	**(1)** 20x20*	**(2)** 25x10*	**(3)** 25x25*		
	200	**(0)** 32x5	**(1)** 32x10*	**(2)** 32x20*	**(3)** 32x32*		
Ballscrew left hand	upon request						
Trapezoidal right hand thread	120	**(0)** 18x4	**(1)** 18x8				
	160	**(0)** 24x5	**(1)** 24x10				
	200	**(0)** 32x6	**(1)** 32x12				
Trapezoidal left hand thread	120	**(0)** 18x4	**(1)** 18x8				
	160	**(0)** 24x5	**(1)** 24x10				
	200	**(0)** 32x6	**(1)** 32x12				

* = only for selection of divided spindle

0 **Ballscrew pitch accuracy:**
(0) 0,05 mm / 300 mm (Standard) **(2)** 0,025 mm / 300 mm

0 **End play of ball nut:**
(0) 0,04 mm (Standard), **(1)** < 0,02 mm, **(2)** 2% apply prestress

Repeatability:
± 0,2 mm Trapezoidal
± 0,025 mm Ballscrew

DL	T	160	3	0	0	0	0	0	0	1500
	Pos.		1	2	3	4	5	6	7	

Basic length + stroke = total length

Sample ordering code:
DLT160, trapezoidal right - left hand thread, with internal profile and cover bands, standard carriage, shaft on the right hand side, spindle 24x5, 1030 mm stroke

Possible mounting styles

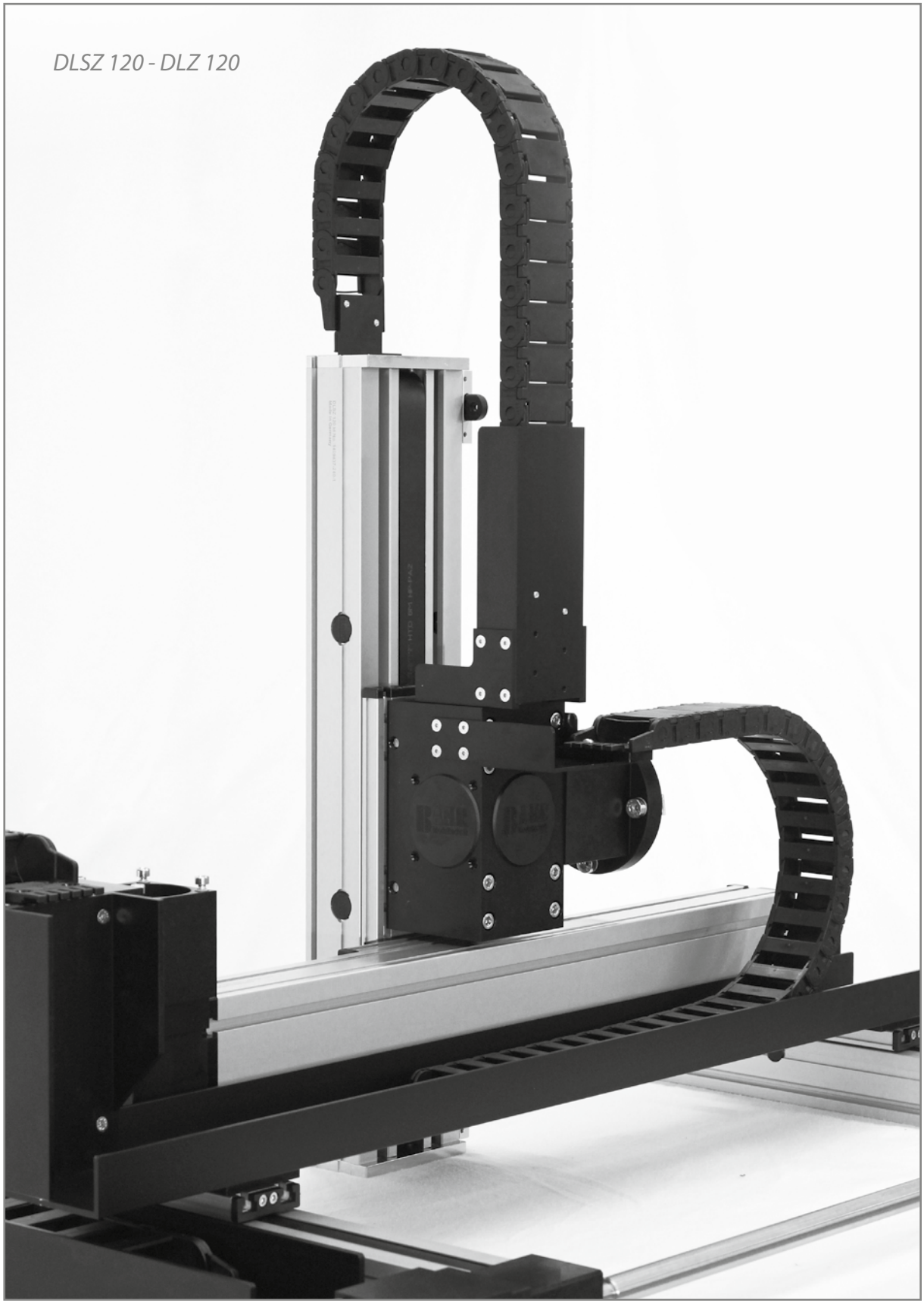

Linear system **DLT/DLK 120 P, 160 P, 200 P**

SPINDLE DRIVE

- INDEPENDENT INSTALLATION POSITION
- PRECISION
- COVER PROFILE

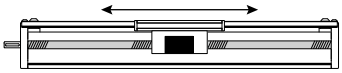

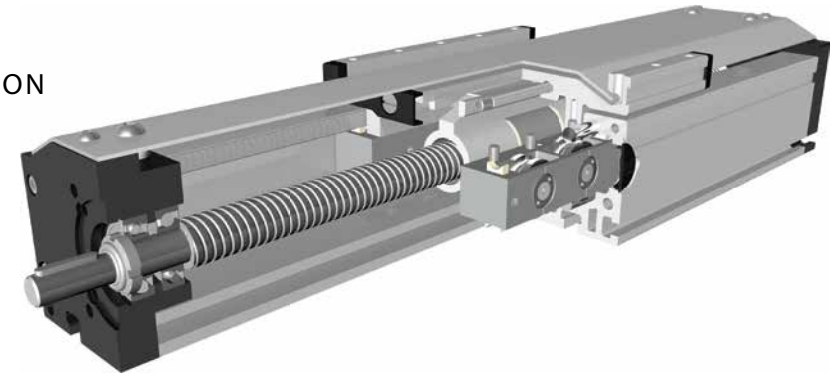

Function:
This unit consists of a rectangular aluminium profile with 2 integrated roller guides. The carriage is driven by means of a rotating spindle with leading nut. Where two parallel linear units are used or where two carriages are mounted on one unit, the leading-nut receiver can be used to adjust the symmetry of the carriages. A special curved aluminium sheet is covering the carriage side. There is only a small gap between carriage and aluminium sheet.

Fitting position: As required. Max. length **DLT/K 120P** / 1600mm, **DLT/K 160P** / 1800mm, **DLT/K 200P** / 2000mm
Carriage mounting: By tapped holes in the carriage.
Unit mounting: By T-slots and mounting sets. The linear axis can be combined with any T-slot profile.
Carriage support: In the standard version, the carriage runs on 8 rollers which can be adjusted and serviced at a central servicing position. For longer carriages the number of rollers can be increased. Repeatability ballscrew ± 0,025 mm, trapezoidal thread ± 0,2 mm.

8.1

Forces and torques

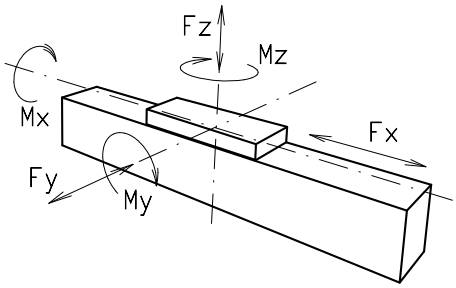

Size	120		160		200	
Forces/Torques	static	dynamic	static	dynamic	static	dynamic
F_x (N)	900	800	5000	4000	10000	8000
F_y (N)	1100	900	3000	2000	4400	3100
F_z (N)	1250	1000	3500	2800	4900	4400
M_x (Nm)	150	125	400	320	600	510
M_y (Nm)	140	120	360	300	560	480
M_z (Nm)	100	90	180	150	310	275

All forces and torques related to the following:

existing values / table values: $\frac{Fy}{Fy_{dyn}} + \frac{Fz}{Fz_{dyn}} + \frac{Mx}{Mx_{dyn}} + \frac{My}{My_{dyn}} + \frac{Mz}{Mz_{dyn}} \leq 1$

No-load torque						
Trapezoidal thread	18 x 4	18 x 8	24 x 5	24 x 10	32 x 6	32 x 12
(Nm)	0,6	0,9	0,6	0,9	0,9	1,1
Ballscrew	16 x 5	16 x 10	25 x 5	20 x 20	32 x 5	32 x 10
(Nm)	0,5	0,8	0,5	0,8	0,7	0,9

Geometrical moments of inertia of aluminium profile			
I_x mm^4	6,6x10^5	22,2x10^5	63,8x10^5
I_y mm^4	38,6x10^5	122,0x10^5	335,0x10^5
Elastic modulus N/mm^2	70000	70000	70000

For life-time calculation of rollers use our homepage.

Driving torque:

$$M_a = \frac{F * P * S_i}{2000 * \pi * \mu} + M_n$$

$$P_a = \frac{M_a * n}{9550}$$

F	= force	(N)
P	= thread pitch	(mm)
Si	= safety factor 1,2 … 2	
M_n	= no-load torque	(Nm)
n	= rpm of screw	(min^{-1})
M_a	= driving torque	(Nm)
μ	= screw efficiency	
P_a	= motor power	(KW)

Efficiency of lead screws:

All ballscrew		0,900
Tr	18x4	0,399
Tr	18x8	0,565
Tr	24x5	0,384
Tr	24x10	0,550
Tr	32x6	0,360
Tr	32x12	0,524

Deflection:

$$f = \frac{F * L^3}{E * I * 192}$$

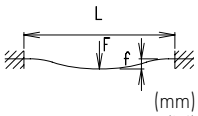

f	= deflection	(mm)
F	= load	(N)
L	= free length	(mm)
E	= elastic modulus 70000	(N/mm^2)
I	= second moment of area	(mm^4)

For the diagram for critical speeds of lead screws refer to chapter 4.2

Linear system **DLT/DLK 120 P, 160 P, 200 P**

Dimensions (mm)

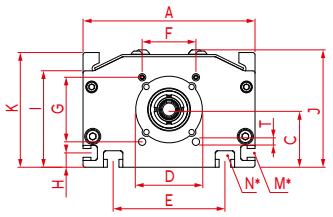

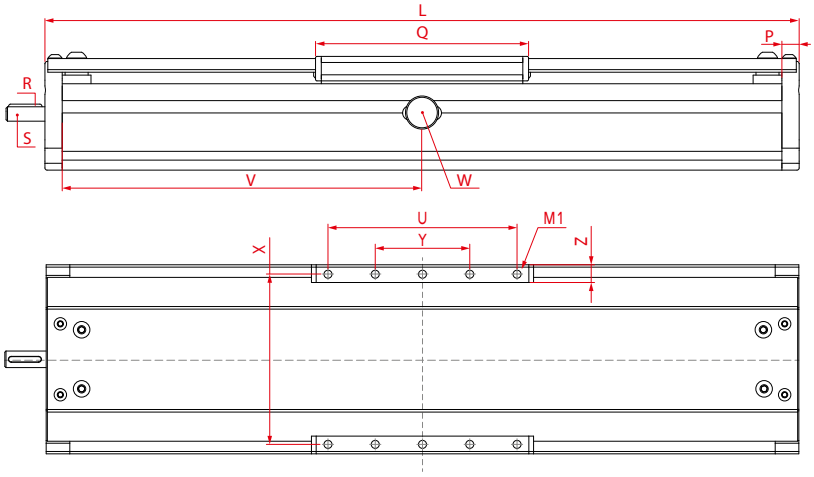

*For slide nuts refer to chapter 2.2 page 2
Increasing the carriage length will increase the basic length by the same amount.

DL 120 M1 = M6 x 8 only 8 threaded holes in the carriage
DL 160 M1 = M8 x 12 **DL 200** M1 = M10 x 12

V = Q + 100 mm W = servicing position

Size	Basic length L	A	C	D +0,1 +0,05	E	F	G	H	I	J	K	M for	N for	P	Q	Shaft R Key	Shaft S Ø h6 x length	T	U	X	Y	Z	Basic weight	Weight per 100 mm
DL 120	220	120	39	47	78	42	42	10	67	82	79	M5	M6	12	152	3x3x25	10 x 27	M6	120	106	40	11,5	4,20 kg	1,16 kg
DL 160	277	160	53	62	90	50	60	11	89	109	106	M6	M8	20	196	5x5x28	14 x 35	M8	160	144	80	15	9,70 kg	1,98 kg
DL 200	340	200	66	68	140	60	60	15	110	133	129	M8	M10	20	256	6x6x40	22 x 45	M8	200	180	100	17	18,70 kg	3,16 kg

T **Spindle:** **(T)** Trapezoidal thread **(K)** Ballscrew

1 **Selection of screw:** **(1)** right hand *(Standard)* **(2)** left hand *(Ballscrew by inquiry)*

0 **Choice of guide body profile:** Stainless versions upon request.

(0)

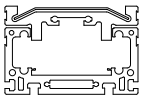

with cover profile

(1)

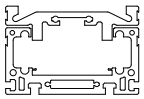

without cover profile

Size	Version 0 Q	Version 0 L	Version 2 Q	Version 2 L	Version 3 Q	Version 3 L
120	152	220	192	260	>240	>308
160	196	277	250	331	>300	>381
200	256	340	330	414	>410	>494

0 **Choice of carriages:**:

(0)

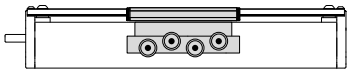

(2)

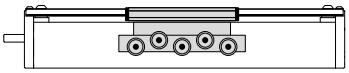

(3)

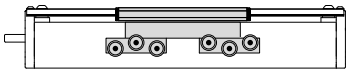

0 **Drive version:**
(0) right (locating bearing side) **(1)** left (non-locating bearing side) **(2)** shaft on both sides

0

Selection of screw:	Size	Standard	Multistart screw				
Ballscrew right hand	120	**(0)** 16x5	**(1)** 16x10	**(2)** 16x16	**(3)** 20x20*	**(4)** 25x5*	**(5)** 25x10*
	160	**(0)** 25x5	**(1)** 20x20	**(2)** 25x10	**(3)** 25x25		
	200	**(0)** 32x5	**(1)** 32x10	**(2)** 32x20	**(3)** 32x32		
Ballscrew left hand			upon request				
Trapezoidal right hand thread	120	**(0)** 18x4	**(1)** 18x8				
	160	**(0)** 24x5	**(1)** 24x10				
	200	**(0)** 32x6	**(1)** 32x12				
Trapezoidal left hand thread	120	**(0)** 18x4	**(1)** 18x8				
	160	**(0)** 24x5	**(1)** 24x10				
	200	**(0)** 32x6	**(1)** 32x12		* by inquiry		

0 **Ballscrew pitch accuracy:**
(0) 0,05 mm / 300 mm (Standard) **(2)** 0,025 mm / 300 mm

0 **End play of ball nut:**
(0) 0,04 mm (Standard), **(1)** < 0,02 mm, **(2)** 2% apply prestress

DL	T	160 P	1	0	0	0	0	0	0	1500
		Pos.	1	2	3	4	5	6	7	

Basic length + stroke = total length

Sample ordering code:
DLT 160 P, trapezoidal right hand thread, with cover profile, standard carriage (0), right (locating bearing side), spindle (standard), 1220 mm stroke.

Linear system **DLZ 120, 160, 200**

BELT DRIVE

- CLEAN ROOM
- UNIVERSAL SYSTEM
- LONG TRAVERSE PATH >6000 MM

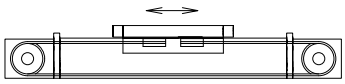

COLANDIS
the clean air company

Function:
This unit consists of a rectangular aluminium profile with 2 integrated roller guides. The carriage is moved by a belt drive. Each standard pulley has got one coupling claw on one side. Belt tension can be readjusted by a simple screw adjustment device in the carriage. This device can also be used for symmetrical adjustment of two or more linear units running parallel. The openings of the guide body are sealed with 3 stainless steel cover bands to protect the guide from splash water and dust. Alternatively, it can also be supplied without cover bands. With this series, multi-part assembled units with long strokes can be realized.

Fitting position: As required. Max. length 6.000 mm without joints.
Carriage mounting: By T-slots.
Unit mounting: By T-slots and mounting sets. The linear axis can be combined with any T-slot profile.
Belt type: HTD with steel reinforcement, no backlash when changing direction, repeatability ± 0,1 mm.
Carriage support: In the standard version, the carriage runs on 8 rollers which can be adjusted and serviced at a central servicing position. For longer carriages the number of rollers can be increased.

8.1

Forces and torques

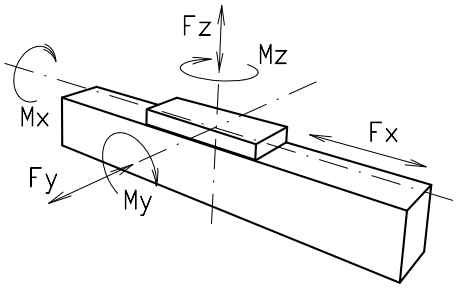

Size	120		160		200	
Forces/Torques	static	dynamic	static	dynamic	static	dynamic.
F_x (N)	894	800	1900	1800	4000	3800
F_y (N)	1100	900	3000	2000	4400	3100
F_z (N)	1250	1000	3500	2800	4900	4400
M_x (Nm)	150	125	400	320	600	510
M_y (Nm)	140	120	360	300	560	480
M_z (Nm)	100	90	180	150	310	275
All forces and torques related to the following:						
existing values / table values	$\frac{Fy}{Fy_{dyn}} + \frac{Fz}{Fz_{dyn}} + \frac{Mx}{Mx_{dyn}} + \frac{My}{My_{dyn}} + \frac{Mz}{Mz_{dyn}} \leq 1$					
No-load torque						
Nm without cover bands	1,2		1,5		1,8	
Nm with cover bands	1,6		2,1		4	
Speed						
(m/s) max	4		6		8	
Tensile force						
permanent (N)	900		1900		4000	
0,2 s (N)	1000		2090		4300	
Geometrical moments of inertia of aluminium profile						
I_x mm^4	$6{,}6 \times 10^5$		$22{,}2 \times 10^5$		$63{,}8 \times 10^5$	
I_y mm^4	$38{,}6 \times 10^5$		$122{,}0 \times 10^5$		335×10^5	
Elastic modulus N/mm^2	70000		70000		70000	

For life-time calculation of rollers use our homepage.

Driving torque:

$$M_a = \frac{F * P * S_i}{2000 * \pi} + M_n$$

$$P_a = \frac{M_a * n}{9550}$$

F = force (N)
P = pulley action perimeter (mm)
Si = safety factor 1,2 … 2
M_n = no-load torque (Nm)
n = rpm pulley (min^{-1})
M_a = driving torque (Nm)
P_a = motor power (KW)

Deflection:

$$f = \frac{F * L^3}{E * I * 192}$$

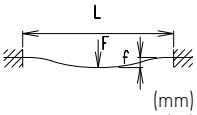

f = deflection (mm)
F = load (N)
L = free length (mm)
E = elastic modulus 70000 (N/mm²)
I = second moment of area (mm⁴)

Linear system **DLZ 120, 160, 200**

Dimensions (mm)

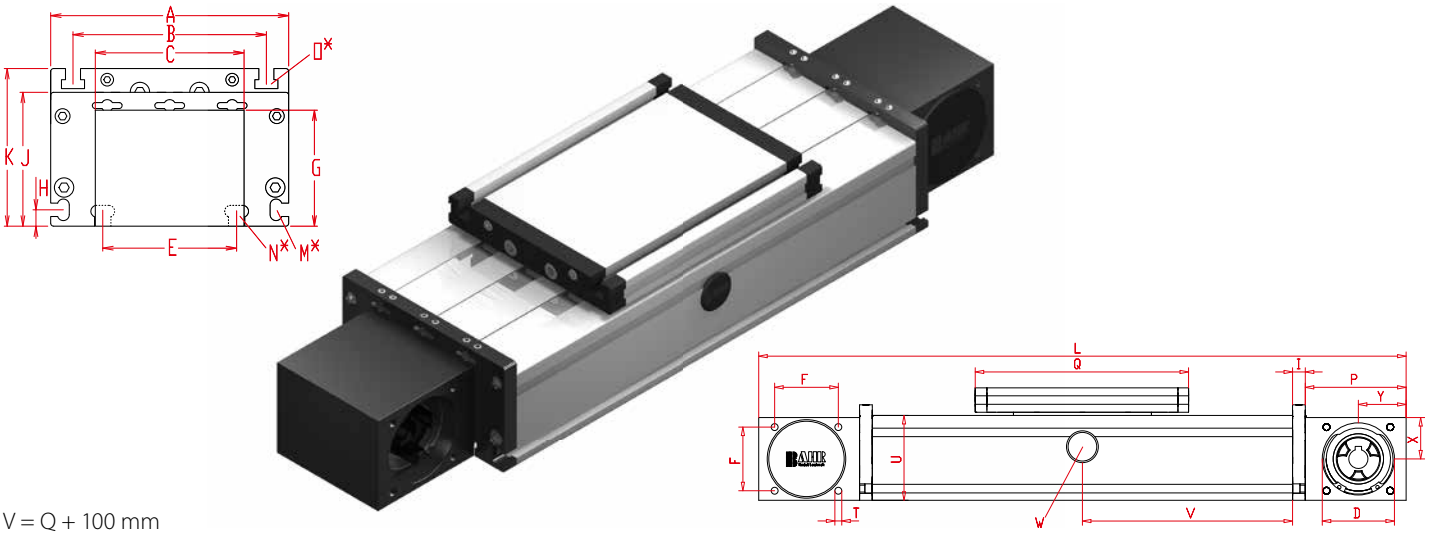

V = Q + 100 mm
W = servicing position

*For slide nuts refer to chapter 2.2 page 2

Increasing the carriage length will increase the basic length by the same amount.

Size	Basic length L	A	B	C	D -0,05	E	F	G	H	I	J	K	M for	N for	O for	P	Q	T	U	X	Y	Basic weight	Weight per 100 mm
DLZ 120	330	120	96	80	47	78	42	58	10	10	68	79	M 5	M 6	M 6	70	156	M 6	60	28	35	5,1 Kg	0,85 Kg
DLZ 160	440	160	130	100	68	90	60	78	11	12	90	106	M 6	M 8	M 8	95	200	M 8	80	39	45	13,0 kg	1,69 kg
DLZ 200	530	200	160	130	90	140	80	97	15	15	110	129	M 8	M10	M10	110	270	M10	100	49	50	23,4 kg	2,33 kg

0 **Choice of guide body profile:** Stainless versions upon request.

(0)

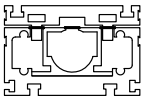

internal profile
with cover bands

(1)

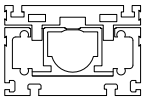

internal profile
without cover bands

(2)

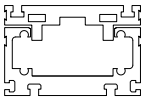

without internal profile
and cover bands

0 **Choice of carriage:**

(0)

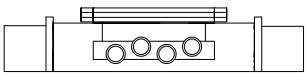

(2)

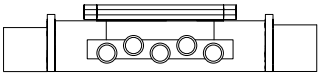

(3)

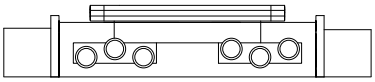

Size	Version 0		Version 2		Version 3	
	Q	L	Q	L	Q	L
120	156	330	196	370	>236	>410
160	200	440	250	490	>300	>540
200	270	530	330	600	>410	>680

0 **Drive version:**

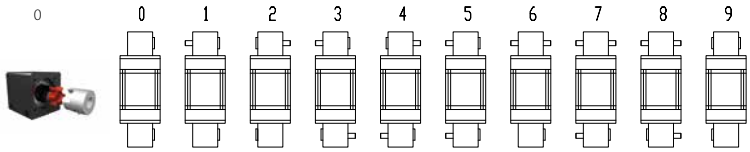

9 is as 0, but with coupling claws on both sides.
The standard version is supplied without shaft. A shaft can be retrofitted by inserting it into the pulley bore and securing it with 2 locking rings or tension sets (size 200).

Belt table:

Code No.		Size	Belt	mm/rev.	Number of teeth
0	**4**	120	5M25	130	26
0	**7**	160	8M30	176	22
0	**9**	160	8M50	176	22
0	**9**	200	8M50	224	28
1	**0**	200	8M70	224	28

Shaft dimensions / Coupling claw:

Size	Shaft ø h6 x length	Key	Coupling
120 (5M25)	14 x 35	5x5x28	14
160 (8M30)	18 x 45	6x6x40	19
160 (8M50)	25 x 35	8x7x32	----- *
200 (8M50)	22 x 45	6x6x40	24
200 (8M70)	30 x 55	8x7x50	----- *

DLZ	160	1	0	0	0	0	7	1	1500
	Pos.	1	2	3	4	5	6	7	

Basic length + stroke = total length

* Coupling claw not possible with belt widening.

Sample ordering code:
DLZ160 with internal profile and cover bands, standard carriage, coupling claw on one side,1060 mm stroke.

Linear system **DLZZ 160, 200**

BELT DRIVE WITH TWO SEPARATELY DRIVEN CARRIAGES

- INDEPENDENT CARRIAGES
- HORIZONTAL INSTALLATION POSITION

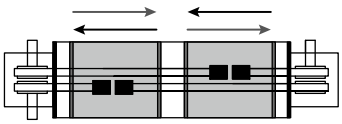

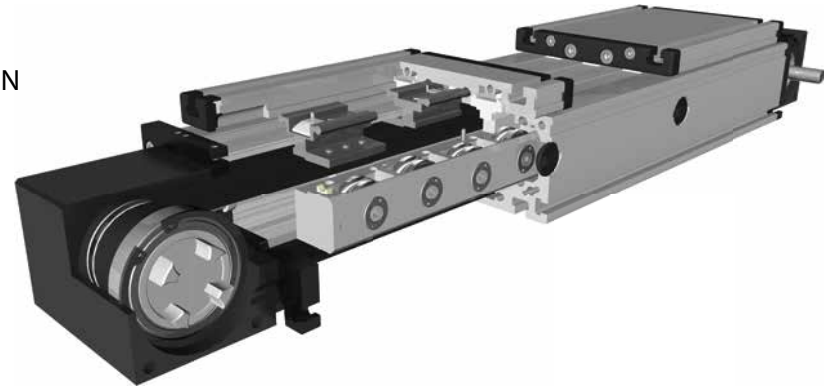

Function:
This unit consists of a rectangular aluminium profile with 2 integrated roller guides. The carriage is moved by a belt drive. Each carriage can be moved separately by its own drive. This unit has twin pulleys, which run on separate bearings, and two independent, parallel drive belts, one for each carriage. The openings of the guide body are sealed with 3 stainless steel cover bands to protect the guide from splash water and dust.

Fitting position: As required. Max. length 4.000 mm without joints.
Carriage mounting: By T-slots
Unit mounting: By T-slots and mounting sets. The linear axis can be combined with any T-slot profile.
Belt type: HTD with steel reinforcement, no backlash when changing direction, repeatability ± 0,1 mm.
Carriage support: In the standard version, the carriage runs on 8 rollers which can be adjusted and serviced at a central servicing position. For longer carriages the number of rollers can be increased.

8.1

Forces and torques

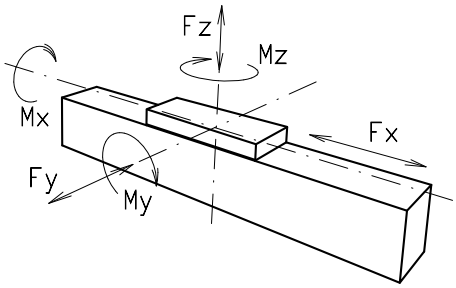

Size	160		200	
Forces/Torques	static	dynamic.	static	dynamic.
F_x (N)	1210	1100	1900	1800
F_y (N)	3000	2000	4400	3100
F_z (N)	3500	2800	4900	4400
M_x (Nm)	400	320	600	510
M_y (Nm)	360	300	560	480
M_z (Nm)	180	150	310	275
All forces and torques related to the following: existing values / table values $\frac{Fy}{Fy_{dyn}} + \frac{Fz}{Fz_{dyn}} + \frac{Mx}{Mx_{dyn}} + \frac{My}{My_{dyn}} + \frac{Mz}{Mz_{dyn}} \leq 1$				
No-load torque				
Nm without cover bands	1,5		1,8	
Nm with cover bands	2,1		4	
Speed				
(m/s) max	6		8	
Tensile force				
permanent (N)	1210		1400	
0,2 s (N)	1331		2090	
Geometrical moments of inertia of aluminium profile				
I_x mm^4	22,2x10^5		63,8x10^5	
I_y mm^4	122,0x10^5		335x10^5	
Elastic modulus N/mm^2	70000		70000	

For life-time calculation of rollers use our homepage.

Driving torque:

$$M_a = \frac{F*P*S_i}{2000*\pi} + M_n$$

$$P_a = \frac{M_a*n}{9550}$$

F	= force	(N)
P	= pulley action perimeter	(mm)
Si	= safety factor 1,2 … 2	
M_n	= no-load torque	(Nm)
n	= rpm pulley	(min^{-1})
M_a	= driving torque	(Nm)
P_a	= motor power	(KW)

Deflection:

$$f = \frac{F*L^3}{E*I*192}$$

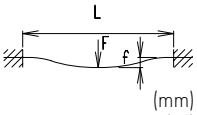

f	= deflection	(mm)
F	= load	(N)
L	= free length	(mm)
E	= elastic modulus 70000	(N/mm^2)
I	= second moment of area	(mm^4)

Linear system **DLZZ 160, 200**

Dimensions (mm)

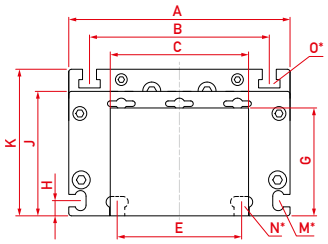

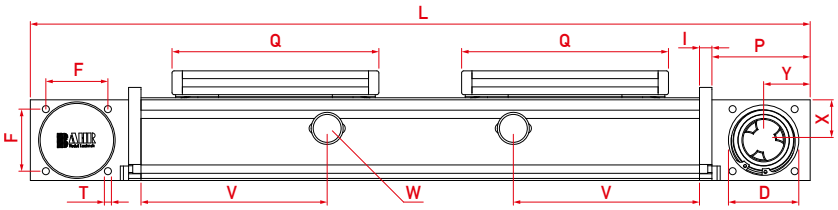

V = Q + 100 mm W = servicing position

*For slide nuts refer to chapter 2.2 page 2

Increasing the carriage length will increase the basic length by the same amount.

Size	Basic length L	A	B	C	D	E	F	G	H	I	J	K	M for	N for	O for	P	Q	T	X	Y	Basic weight	Weight per 100 mm
DLZZ 160	615	160	130	121	68	90	60	78	11	12	90	106	M6	M8	M8	95	200	M8	39	45	16,0 kg	1,69 kg
DLZZ 200	790	200	160	150	90	140	80	97	15	15	110	129	M8	M10	M10	110	270	M10	49	50	28,50 kg	2,33 kg

0 **Choice of guide body profile:** Stainless versions upon request.

(0)

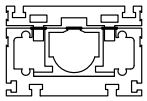

internal profile
with cover bands

(1)

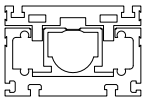

internal profile
without cover bands

(2)

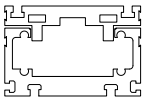

without internal profile
and cover bands

0 **Choice of carriage:**

(0)

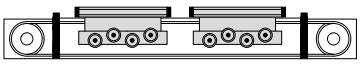

(2)

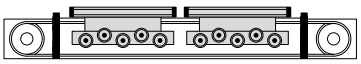

(3)

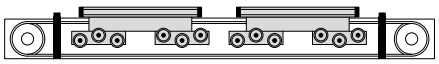

Size	Version 0		Version 2		Version 3	
	Q	L	Q	L	Q	L
160	200	615	250	715	300	830
200	270	790	330	910	410	1070

0 **Drive version:**

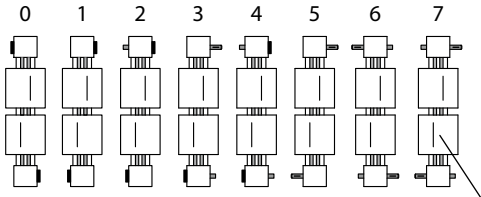

Coupling claw on one side

Standard-shaft [1]

Shaft one size smaller [2]

Connected with the left belt

Belt table:

Code No.		Size	Belt	mm/rev.	Number of teeth
0	6	**160**	8M 20	176	22
0	7	**200**	8M 30	224	28

Shaft dimensions / Coupling claw:

Size	Shaft ø h6 x length	Key	Coupling
DLZZ 160 [1]	Ø 18 x 45	6x6x35	19
DLZZ 160 [2]	Ø 14 x 35	5x5xx28	19
DLZZ 200 [1]	Ø 22 x 45	6x6x40	24
DLZZ 200 [2]	Ø 18 x 45	6x6x40	24

DLZZ	200	4	0	0	2	0	7	1	1500
	Pos.	1	2	3	4	5	6	7	

— Basic length + stroke = total length

Sample ordering code:
DLZZ 200 with internal profile and cover bands, carriage version 0, drive version 2, 710 mm stroke.

Linear system **DLZPVI 120, 160, 200**

BELT DRIVE

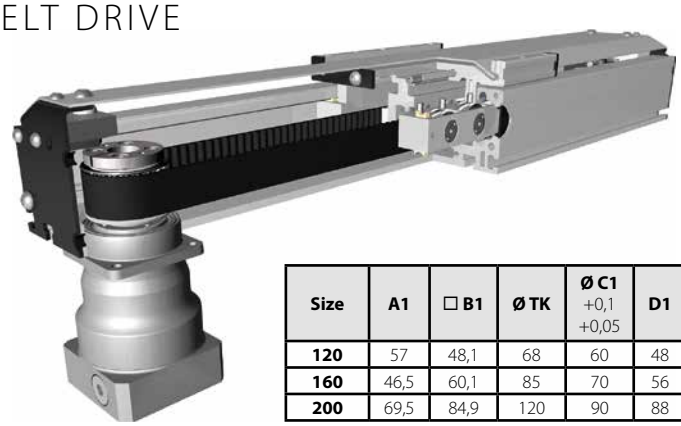

Size	A1	□ B1	Ø TK	Ø C1 +0,1 +0,05	D1	E1	F1
120	57	48,1	68	60	48	16	M5
160	46,5	60,1	85	70	56	22	M6
200	69,5	84,9	120	90	88	32	M8

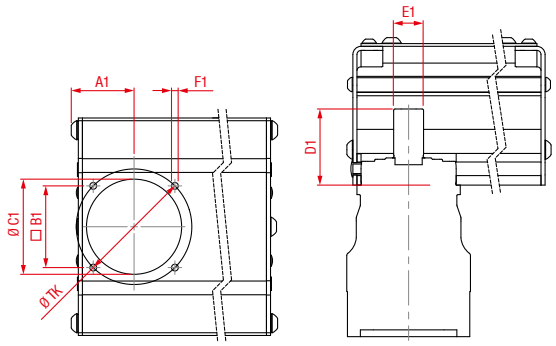

Function:
This unit consists of a rectangular aluminium profile with 2 integrated roller guides. The carriage is moved by a belt drive. On the drive side the pulley is beared on the shaft of a planetary gear. Belt tension can be readjusted by a simple screw adjustment at the opposite side of the drive. A special curved aluminium sheet is covering the carriage side. There is only a small gap between carriage and aluminium sheet. Because of its special design it is possible to drive the carriage over the pulley areas. This fact is making the unit very compact. The cover profile can be adjusted according to the mounting position.

Fitting position: As required, max. length **DLZPVI 120** / 1600mm, **DLZPVI 160** / 1800mm, **DLZPVI 200** / 2000mm
Carriage mounting: By tapped holes.
Unit mounting: T-slots
Belt type: HTD with steel reinforcement, no backlash when changing direction, repeatability ± 0,1 mm.
Carriage support: In the standard version, the carriage runs on 4 runner blocks which can be serviced at a central servicing position. For longer carriages the number of runner blocks can be increased.

8.1

Forces and torques

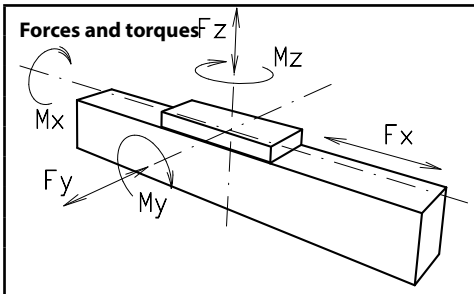

Size	120		160		200	
Forces/Torques	static	dynamic	static	dynamic	static	dynamic.
F_x (N)	894	800	1900	1800	4000	3800
F_y (N)	1100	900	3000	2000	4400	3100
F_z (N)	1250	1000	3500	2800	4900	4400
M_x (Nm)	150	125	400	320	600	510
M_y (Nm)	140	120	360	300	560	480
M_z (Nm)	100	90	180	150	310	275
All forces and torques related to the following: existing values / table values $\frac{Fy}{Fy_{dyn}} + \frac{Fz}{Fz_{dyn}} + \frac{Mx}{Mx_{dyn}} + \frac{My}{My_{dyn}} + \frac{Mz}{Mz_{dyn}} \leq 1$						
No-load torque						
Nm	1,2		1,5		1,8	
Speed						
(m/s) max	4		6		8	
Tensile force						
permanent (N)	900		1900		4000	
0,2 s (N)	1000		2090		4300	
Geometrical moments of inertia of aluminium profile						
I_x mm^4	6,6 x 10^5		22,2 x 10^5		57,2 x 10^5	
I_y mm^4	38,6 x 10^5		122,0 x 10^5		310 x 10^5	
Elastic modulus N/mm^2	70000		70000		70000	

For life-time calculation of rollers use our homepage.

Driving torque:

$$M_a = \frac{F * P * S_i}{2000 * \pi} + M_n$$

$$P_a = \frac{M_a * n}{9550}$$

F = force (N)
P = pulley action perimeter (mm)
Si = safety factor 1,2 … 2
M_n = no-load torque (Nm)
n = rpm pulley (min^{-1})
M_a = driving torque (Nm)
P_a = motor power (KW)

Deflection:

$$f = \frac{F * L^3}{E * I * 192}$$

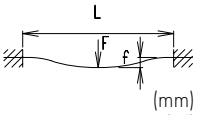

f = deflection (mm)
F = load (N)
L = free length (mm)
E = elastic modulus 70000 (N/mm^2)
I = second moment of area (mm^4)

Linear system **DLZPVI 120, 160, 200**

Dimensions (mm)

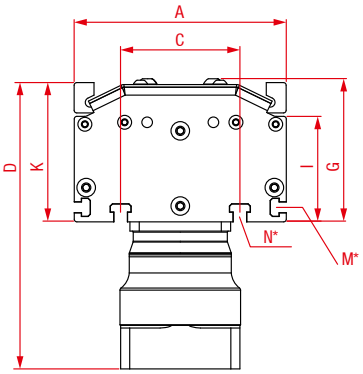

Optionally available with angular planetary gearbox

Increasing the carriage length will increase the basic length by the same amount.

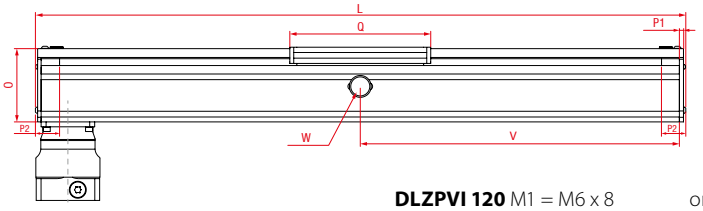

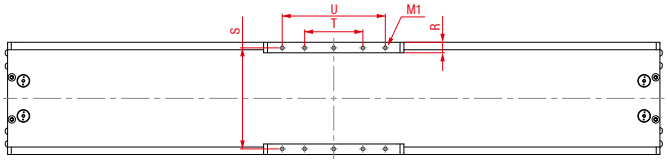

DLZPVI 120 M1 = M6 x 8 only 8 threaded holes in the carriage

V = Q + 100

*slide nuts

DLZPVI 160 M1 = M8 x 12 **DLZPVI 200** M1 = M10 x 12

W = servicing position

8.1

Size	Basic length L	A	C	D	G	I	K	M for	N for	O	P1	P2	Q	R	S	T	U	Basic weight *without gearbox*	Weight per 100 mm
DLZPVI 120	225	120	78	169	82,5	60	79	M5	M6	78	6	35	152	11,5	106	40	120	3,74 kg	0,65 kg
DLZPVI 160	285	160	90	217,5	108,5	80	106	M6	M8	104	8,25	43,5	196	15	144	80	160	10,42 kg	1,26 kg
DLZPVI 200	350	200	140	251	132,5	100	129	M8	M10	128	10	45,5	256	17	180	100	200	17,44 kg	2,18 kg

0 **Choice of guide body profile:** Stainless versions upon request.

(0)

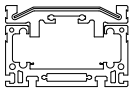

with cover profile

(1)

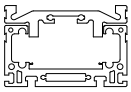

without cover profile

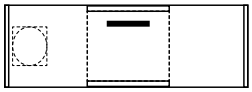

belt connection

0 **Choice of carriages:**

(0)

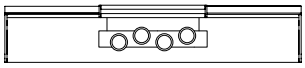

(2)

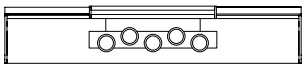

(3)

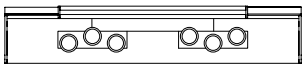

Size	Version 2		Version 3	
	Q	L	Q	L
120	192	265	232	305
160	246	335	296	385
200	320	420	400	500

0 **Drive version:**

(0)

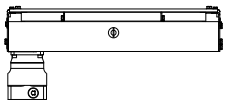

(1)

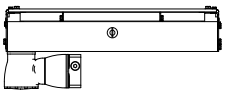

(2)

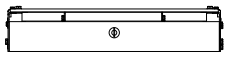

(0) planetary gearbox
(1) angular planetary gearbox
(2) without gearbox

Belt table:

Code-No.		Size	Belt	mm/rev.	Number of teeth
0	4	**120**	5M25	130	26
0	7	**160**	8M30	176	22
0	9	**200**	8M50	224	28

Gearbox variants:

Gearbox		DLZPVI 120	DLZPVI 160	DLZPVI 200
Neugart	(0)	PLN 70	PLN 90	PLN 115
	(1)	WPLN 70	WPLN 90	WPLN 115
SEW	(0)	PSKC 221	PSKC 321	PSKC 521
Wittenstein	(0)	SP+060	SP+075	SP+100
	(1)	SK+060	SK+075	SK+100

DLZPVI	160	1	0	0	0	0	7	1	1500
	Pos.	1	2	3	4	5	6	7	

Basic length + stroke = total length

Sample ordering code:
DLZPVI 160 with cover profile, standard carriage, with planetary gearbox, 1202 mm stoke.

Linear system **DLZA 120, 160, 200**

RACK AND PINION DRIVE

- HIGH LOADS
- HIGH DYNAMICS
- LONG TRAVERSE PATH >6000 MM
- SPACE SAVING

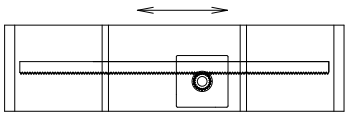

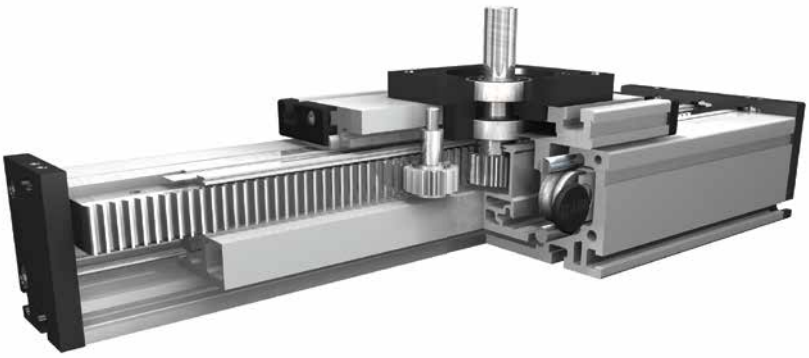

Function:
This unit consists of a rectangular aluminium profile with 2 integrated roller guides. The carriage, which has internal linear ball bearings that can be adjusted free of play, is driven along the guide rods by a high precision rack. The rack and pinion system is suitable for highly dynamic servo operation and ideal for lifting movements. The pinion is equipped with maintenance-free ball bearings. The rack is lubricated by a toothed felt wheel. With this series, multi-part assembled units with long strokes can be realized.

Fitting position: As required. Max. length 6.000 mm without joints.
Carriage mounting: By T-slots.
Unit mounting: By T-slots and mounting sets. The linear axis can be combined with any T-slot profile.
Rack: 6h23 Modul 2 (hardened and ground), repeatability ± 0,1 mm.
Carriage support: In the standard version, the carriage runs on 8 rollers which can be adjusted and serviced at a central servicing position. For longer carriages the number of rollers can be increased.

Forces and torques

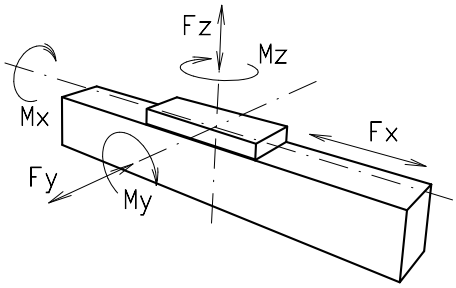

Size	160		200	
Forces/Torques	static	dynam.	static	dynam.
F_x (N)	1900	1800	4000	3800
F_y (N)	3000	2000	4400	3100
F_z (N)	3500	2800	4900	4400
M_x (Nm)	400	320	600	510
M_y (Nm)	360	300	560	480
M_z (Nm)	180	150	310	275
All forces and torques related to the following: existing values / table values $\frac{Fy}{Fy_{dyn}} + \frac{Fz}{Fz_{dyn}} + \frac{Mx}{Mx_{dyn}} + \frac{My}{My_{dyn}} + \frac{Mz}{Mz_{dyn}} \leq 1$				
No-load torque				
Nm	1,5		2,6	
Speed				
(m/s) max	3		5,0	
Tensile force				
permanent (N)	1900		3000	
Geometrical moments of inertia of aluminium profile				
I_x mm^4	22,2x10^5		63,8x10^5	
I_y mm^4	122,0x10^5		335x10^5	
Elastic modulus N/mm^2	70000		70000	

For life-time calculation of rollers use our homepage.

Driving torque:

$$M_a = \frac{F*P*S_i}{2000*\pi} + M_n$$

$$P_a = \frac{M_a*n}{9550}$$

F = force (N)
P = pulley action perimeter (mm)
Si = safety factor 1,2 … 2
M_n = no-load torque (Nm)
n = rpm pulley (min^{-1})
M_a = driving torque (Nm)
P_a = motor power (KW)

Deflection:

$$f = \frac{F*L^3}{E*I*192}$$

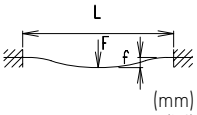

f = deflection (mm)
F = load (N)
L = free length (mm)
E = elastic modulus 70000 (N/mm^2)
I = second moment of area (mm^4)

Linear system **DLZA 120, 160, 200**

Dimensions (mm)

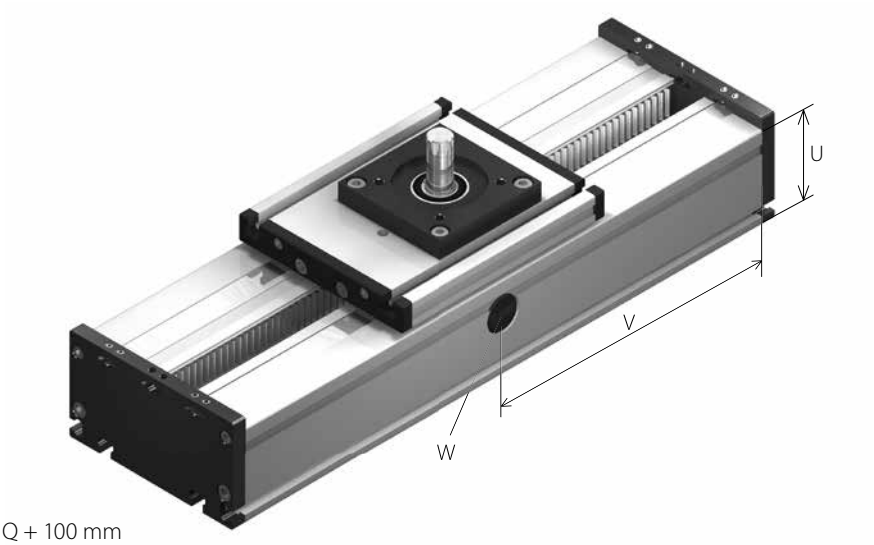

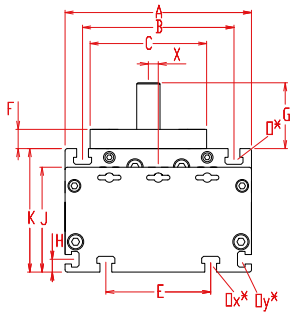

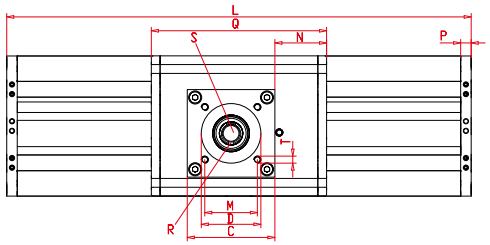

V = Q + 100 mm
W = servicing position
*For slide nuts refer to chapter 2.2 page 2

Increasing the carriage length will increase the basic length by the same amount.

Size	Basic length L	A	B	C	D ±0,05	E	F	G	H	J	K	M	N	O for	Ox for	Oy for	P	Q	T for	U	X	Basic weight	Weight per 100 mm
DLZA 160	240	160	130	100	68	90	16,5	56,5	11	90	106	60	59	M 8	M 8	M 6	12	200	M 8	80	8,5	13,0 kg	2,10 kg
DLZA 200	320	200	160	120	90	140	20	45	15	110	129	80	95	M 10	M 10	M 8	15	270	M 8	100	5	28,9 kg	6,15 kg

8.1

0 **Choice of guide body profile:** Stainless versions upon request.

(0)

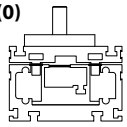

internal profile
with cover bands

(1)

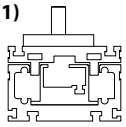

internal profile
without cover bands

0 **Choice of carriage:**

(0)

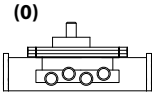

(1)

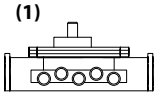

(2)

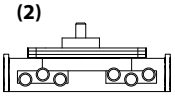

(3)

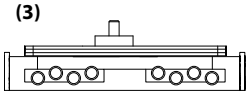

Size	Version 0		Version 1		Version 2		Version 3	
	Q	L	Q	L	Q	L	Q	L
160	200	240	250	290	>300	>340	--	--
200	270	320	330	380	>410	>460	>535	>580

1 **Drive version:**

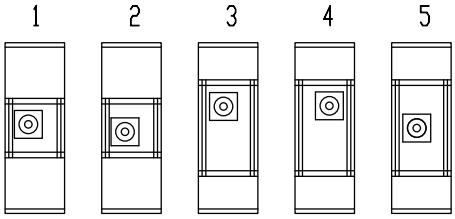

Shaft dimensions:

Size	Shaft ø h6 x length	Key	Pinion	
	S	R	mm/rev.	Modul
160	20 x 40	6x6x35	100,53	2
200	18 x 25	6x6x20	94,25	2

DLZA	160	1	0	0	1	0	0	1	1500
	Pos.	1	2	3	4	5	6	7	

Basic length + stroke = total length

Sample ordering code:
DLZA160 with internal profile and cover bands, standard carriage,1260 mm stroke.

Linear system **DLSZ 120, 160, 200**

BELT DRIVE

- OMEGA SYSTEM
- HORIZONTAL INSTALLATION POSITION
- OFF-CENTER LOADS

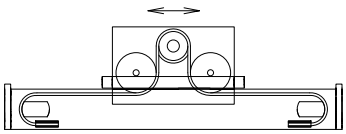

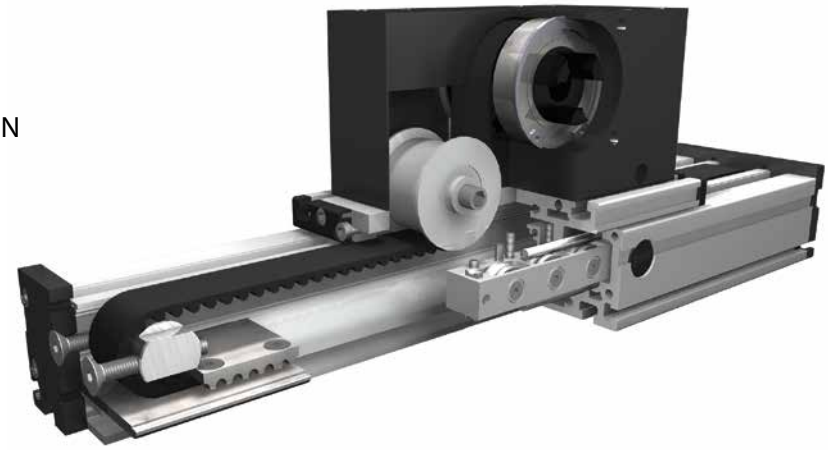

Function:
This linear unit consists of a rectangular aluminium profile with integrated, hardened steel guide rods. The carriage, which has linear ball bearings that can be adjusted free of play, is driven along the guide rods by a timing belt. Each standard pulley includes a coupling claw on one side and is equipped with maintenance-free ball bearings. Belt tension can be readjusted by a simple screw adjustment device in the carriage. This device can also be used for symmetrical adjustment of two or more linear units running parallel. Compared to conventional toothed belt drives, the drive connection is offset by 90 °.

Fitting position: As required. Max. length 6.000 mm without joints.
Carriage mounting: By T-slots.
Unit mounting: By T-slots and mounting sets. The linear axis can be combined with any T-slot profile.
Belt performance: HTD with steel reinforcement, no backlash when changing direction, repeatability ± 0,1 mm.
Carriage support: In the standard version, the carriage runs on 8 rollers which can be adjusted and serviced at a central servicing position. For longer carriages the number of rollers can be increased.

Forces and torques

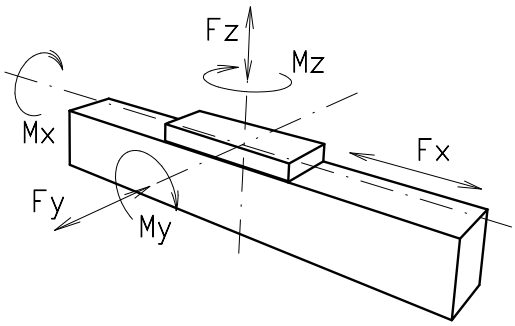

Size	120		160		200	
Forces/Torques	static	dynamic	static	dynamic	static	dynamic
F_x (N)	1900	1800	4000	3800	5900	5750
F_y (N)	1100	900	3000	2000	4400	3100
F_z (N)	1250	1000	3500	2800	4900	4400
M_x (Nm)	150	125	400	320	600	510
M_y (Nm)	140	120	360	300	560	480
M_z (Nm)	100	90	180	150	310	275

All forces and torques related to the following:

existing values / table values: $\frac{Fy}{Fy_{dyn}} + \frac{Fz}{Fz_{dyn}} + \frac{Mx}{Mx_{dyn}} + \frac{My}{My_{dyn}} + \frac{Mz}{Mz_{dyn}} \leq 1$

No-load torque			
Nm	1,1	1,5	1,8
Speed			
(m/s) max	4	6	8
Tensile force			
permanent (N)	1900	4000	5900
0,2 s (N)	2090	4300	6350
Geometrical moments of inertia of aluminium profile			
I_x mm^4	6,6x10^5	2,22x10^6	6,38x10^6
I_y mm^4	38,6x10^5	12,20x10^6	33,5x10^6
Elastic modulus N/mm^2	70000	70000	70000

For life-time calculation of rollers use our homepage.

Driving torque:

$$M_a = \frac{F * P * S_i}{2000 * \pi} + M_n$$

$$P_a = \frac{M_a * n}{9550}$$

F = force (N)
P = pulley action perimeter (mm)
Si = safety factor 1,2 … 2
M_n = no-load torque (Nm)
n = rpm pulley (min^{-1})
M_a = driving torque (Nm)
P_a = motor power (KW)

Deflection:

$$f = \frac{F * L^3}{E * I * 192}$$

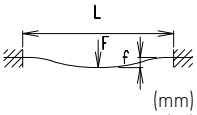

f = deflection (mm)
F = load (N)
L = free length (mm)
E = elastic modulus 70000 (N/mm^2)
I = second moment of area (mm^4)

Linear system **DLSZ 120, 160, 200**

Dimensions (mm)

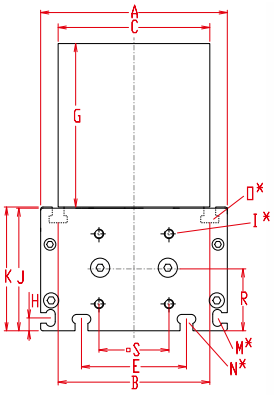

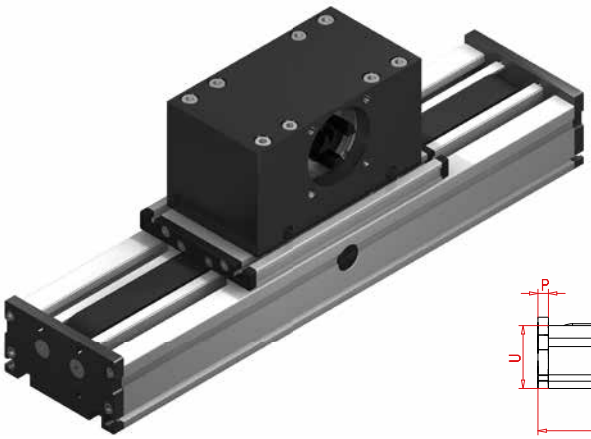

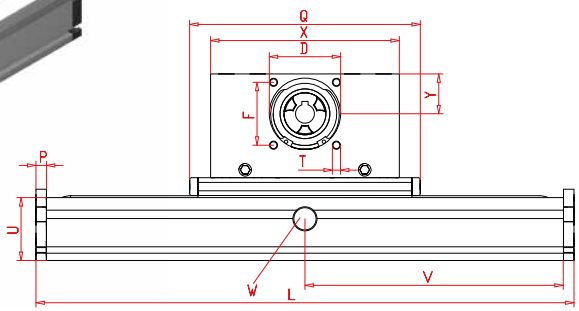

V = Q + 100 mm
W = servicing position

*For slide nuts refer to chapter 2.2 page 2

Increasing the carriage length will increase the basic length by the same amount.

Size	Basic length L	A	B	C	D -0,05	E	F	G	H	J	K	I for	M for	N for	O for	P	Q	R	S	T	U	X	Y	Basic weight	Weight per 100 mm
DLSZ 120	230	120	96	100	68	78	60	100	10	68	79	M 6	M 5	M 6	M 6	10	200	39	42	M 8	60	180	39	12,0 kg	1,2 kg
DLSZ 160	330	160	130	130	90	90	80	130	11	105	106	M 8	M 6	M 8	M 8	12	290	53	60	M 10	80	270	60	27,0 kg	1,8 kg
DLSZ 200	380	200	160	160	110	140	100	145	15	128	129	M 10	M 8	M 10	M 10	15	340	69	95	M 10	100	310	62	53,0 kg	2,6 kg

1 **Choice of guide body profile:** Stainless versions upon request.

(1)

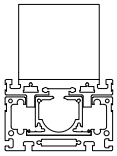

internal profile
with cover bands

(2)

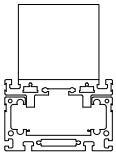

without internal profile
and cover bands

0 **Choice of carriages:**

(0)

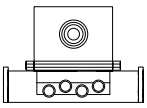

(1)

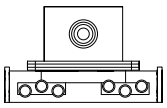

(2)

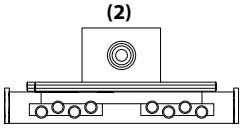

Size	Version 0		Version 1		Version 2	
	Q	L	Q	L	Q	L
120	200	230	>280	>310	>360	>390
160	290	330	>390	>430	>490	>530
200	340	380	>480	>520	>610	>650

0 **Drive version:**

0

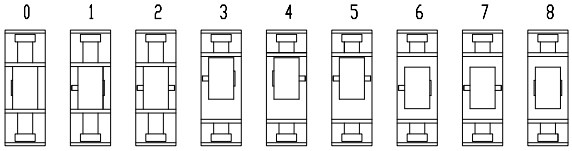

8 is as 0, but with coupling claws on both sides. The standard version is supplied without shaft. A shaft can be retrofitted by inserting it into the pulley bore and securing it with 2 locking rings or tension sets (size 160 and 200).

Belt table:

Code No.		Size	Belt	mm/rev.	Number of teeth
0	**7**	**120**	8M30	192	24
0	**9**	**160**	8M50	256	32
1	**0**	**200**	8M70	304	38

Shaft dimensions / Coupling claw:

Size	Shaft ø h6 x length	Key	Coupling
120	18 x 45	6x6x40	19
160	22 x 45	6x6x40	24
200	30 x 55	8x7x50	28

DLSZ	120	1	1	0	0	0	7	2	1500
	Pos.	1	2	3	4	5	6	7	

Basic length + stroke = total length

Sample ordering code:
DLSZ120, body profile with internal profile without cover bands, standard carriage, coupling claws on one side, 1270 mm stroke

Linear system **DLVZ 120, 160**

INTERNAL BELT DRIVE

- INDEPENDENT INSTALLATION POSITION
- SPECIAL DRIVE VERSION
- SPACE SAVING

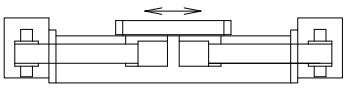

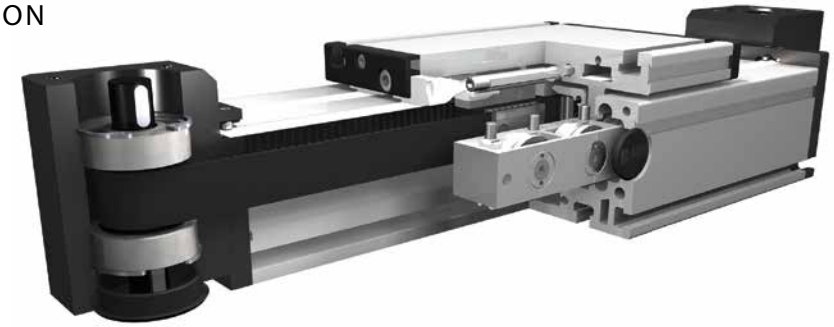

Function:
This unit consists of a rectangular aluminium profile with 2 integrated roller guides. The carriage is moved by a belt drive. Belt tension can be readjusted by a simple screw adjustment device in the carriage. This device can also be used for symmetrical adjustment of two or more linear units running parallel. The openings of the guide body are sealed with 3 stainless steel cover bands to protect the guide from splash water and dust. Alternatively, it can also be supplied without cover bands.

Fitting position: As required. Max. length 3.000 mm without joints.
Carriage mounting: By T-slots.
Unit mounting: By T-slots and mounting sets. The linear axis can be combined with any T-slot profile.
Belt type: HTD with steel reinforcement, no backlash when changing direction, repeatability ± 0,1 mm.
Carriage support: In the standard version, the carriage runs on 8 rollers which can be adjusted and serviced at a central servicing position. For longer carriages the number of rollers can be increased.

Forces and torques

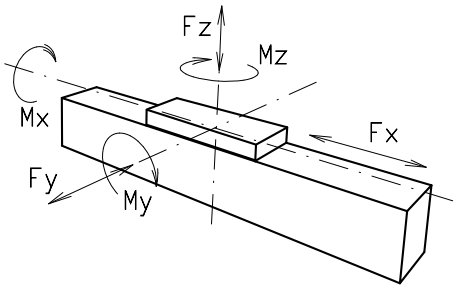

Size	DLVZ 120		DLVZ 160	
Forces/Torques	static	dynamic	static	dynamic
F_x (N)	894	800	1000	840
F_y (N)	1100	900	3000	2000
F_z (N)	1250	1000	3500	2800
M_x (Nm)	150	125	400	320
M_y (Nm)	140	120	360	300
M_z (Nm)	100	90	180	150
All forces and torques relate to the following: existing values / table values $\frac{Fy}{Fy_{dyn}} + \frac{Fz}{Fz_{dyn}} + \frac{Mx}{Mx_{dyn}} + \frac{My}{My_{dyn}} + \frac{Mz}{Mz_{dyn}} \leq 1$				
No-load torque				
Nm	1,4		1,8	
Speed				
(m/s) max	3		4	
Tensile force				
permanent (N)	900		1000	
0,2 s (N)	1000		1150	
Geometrical moments of inertia of aluminium profile				
I_x mm^4	6,6x10^5		22,2x10^5	
I_y mm^4	38,6x10^5		122,0x10^5	
E-Modulus N/mm^2	70000		70000	

For life-time calculation of rollers use our homepage.

Driving torque:

$$M_a = \frac{F * P * S_i}{2000 * \pi} + M_n$$

$$P_a = \frac{M_a * n}{9550}$$

F = force (N)
P = pulley action perimeter (mm)
Si = safety factor 1,2 … 2
M_n = no-load torque (Nm)
n = rpm pulley (min^{-1})
M_a = driving torque (Nm)
P_a = motor power (KW)

Deflection:

$$f = \frac{F * L^3}{E * I * 192}$$

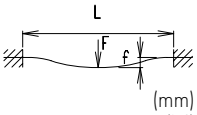

f = deflection (mm)
F = load (N)
L = free length (mm)
E = elastic modulus 70000 (N/mm^2)
I = second moment of area (mm^4)

Linear system **DLVZ 120, 160**

Dimensions (mm)

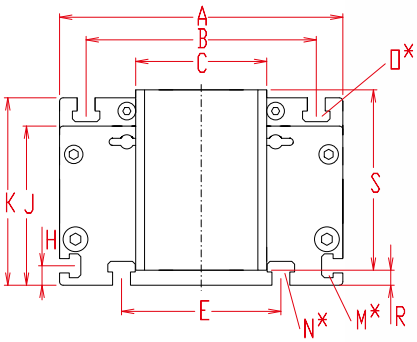

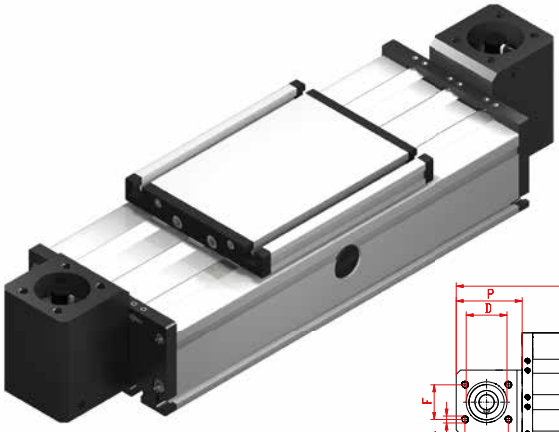

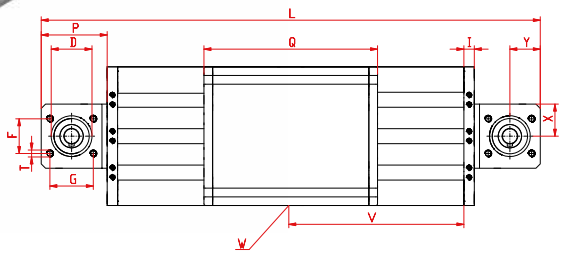

V = Q + 100 mm
W = servicing position
*For slide nuts refer to chapter 2.2 page 2

Increasing the carriage length will increase the basic length by the same amount.

Size	Basic length L	A	B	C	D -0,05	E	F	G	H	I	J	K	M for	N for	O for	P	Q	R	S	T	U	X	Y	Basic weight	Weight per 100 mm
DLVZ 120	300	120	96	56	37	78	30	36	10	10	68	79	M5	M6	M6	56	156	2,5	82	M6	60	28	24	4,62 kg	0,82 kg
DLVZ 160	410	160	130	74	47	90	40	50	11	12	90	106	M6	M8	M8	76	200	8,5	102	M 8	80	37	35	11,23 kg	1,76 kg

1 **(1)** Belt connection right

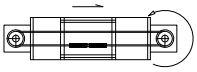

(2) Belt connection left

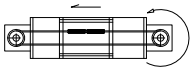

0 **Choice of guide body profile:** Stainless versions upon request.

(0)

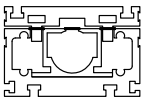

internal profile
with cover bands

(1)

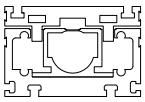

internal profile
without cover bands

(2)

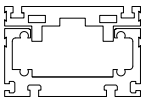

without internal profile
and cover bands

0 **Choice of carriages:**

(0)

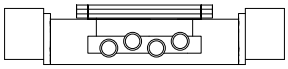

(2)

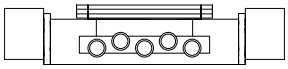

(3)

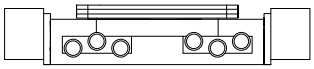

Size	Version 0		Version 2		Version 3	
	Q	L	Q	L	Q	L
120	156	300	196	340	236	380
160	200	410	250	460	>300	>510

0 **Drive version:**

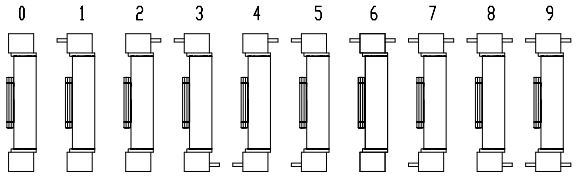

The standard version 0 is supplied with 4 flush mounted shafts.

Belt table:

Code No.		Size	Belt	mm/rev.	Number of teeth
0	4	**120**	5M25	80	16
0	4	**160**	5M25	110	22

Shaft dimensions:

Size	Shaft ø h6 x length	Key
120	14 x 35	5x5x28
160	18 x 45	6x6x40

DLVZ	160	1	0	0	0	0	4	1	1500
	Pos.	1	2	3	4	5	6	7	

Basic length + stroke = total length

Sample ordering code:
DLVZ 160 with belt connection right, internal profile with cover bands, standard carriage and 4 flush mounted shafts, 1090 mm stroke

Linear system **DLZS 120, 160, 200**

BELT DRIVE

- OMEGA SYSTEM
- VERTICAL INSTALLATION POSITION
- LIFTING SYSTEM

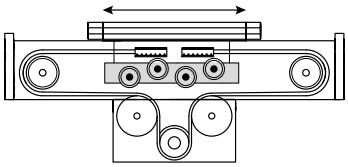

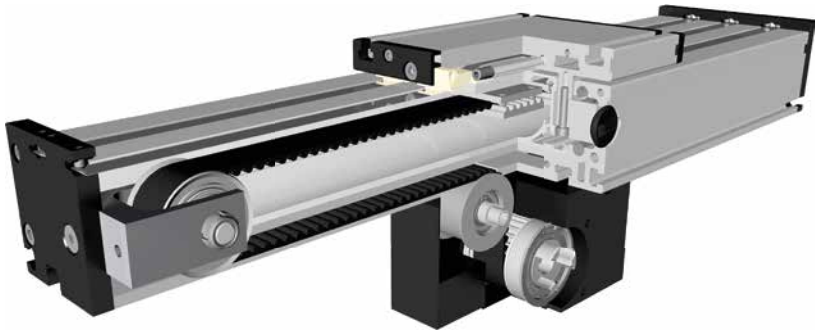

Function:
This unit consists of a rectangular aluminium profile with 2 integrated roller guides. The carriage is moved by a belt drive. An innovation is that the toothed belt is diverted within a drive block positioned centrically. The result is an enormous compactness with regard to the overall system length. The toothed drive pulley has a coupling claw in the standard version. Belt tension can be readjusted by a simple screw adjustment device in the carriage. This device can also be used for symmetrical adjustment of two or more linear units running parallel. The openings of the guide body are sealed with 3 stainless steel cover bands to protect the guide from splash water and dust. Use: compact and space-saving system with variable position of the drive block.

Fitting position: As required. Max. length 6.000 mm without joints.
Carriage mounting: By T-slots.
Unit mounting: By T-slots and mounting sets. The linear axis can be combined with any T-slot profile.
Belt type: HTD with steel reinforcement, no backlash when changing direction, repeatability ± 0,1 mm.
Carriage support: In the standard version, the carriage runs on 8 rollers which can be adjusted and serviced at a central servicing position. For longer carriages the number of rollers can be increased.

Forces and torques

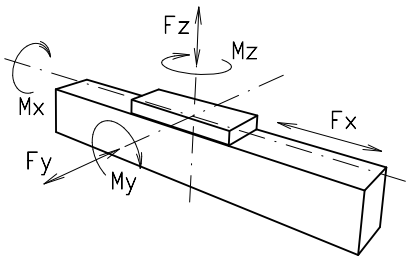

Size	120		160		200	
Forces/Torques	static	dynamic	static	dynamic.	static	dynamic.
F_x (N)	894	800	1900	1800	4000	3800
F_y (N)	1100	900	3000	2000	4400	3100
F_z (N)	1250	1000	3500	2800	4900	4400
M_x (Nm)	150	125	400	320	600	510
M_y (Nm)	140	120	360	300	560	480
M_z (Nm)	100	90	180	150	310	275

All forces and torques related to the following:

existing values / table values: $\frac{Fy}{Fy_{dyn}} + \frac{Fz}{Fz_{dyn}} + \frac{Mx}{Mx_{dyn}} + \frac{My}{My_{dyn}} + \frac{Mz}{Mz_{dyn}} \leq 1$

No-load torque			
Nm without cover bands	1,2	1,5	1,8
Nm with cover bands	1,6	2,1	4
Speed			
(m/s) max	4	6	8
Tensile force			
permanent (N)	900	1900	4000
0,2 s (N)	1000	2090	4300
Geometrical moments of inertia of aluminium profile			
I_x mm^4	6,6x10^5	22,2x10^5	63,8x10^5
I_y mm^4	38,6x10^5	122,0x10^5	335x10^5
Elastic modulus N/mm^2	70000	70000	70000

For life-time calculation of rollers use our homepage.

Driving torque:

$$M_a = \frac{F * P * S_i}{2000 * \pi} + M_n$$

$$P_a = \frac{M_a * n}{9550}$$

F	= force	(N)
P	= pulley action perimeter	(mm)
Si	= safety factor 1,2 … 2	
M_n	= no-load torque	(Nm)
n	= rpm pulley	(min^{-1})
M_a	= driving torque	(Nm)
P_a	= motor power	(KW)

Deflection:

$$f = \frac{F * L^3}{E * I * 192}$$

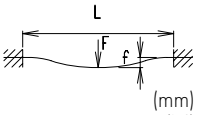

f	= deflection	(mm)
F	= load	(N)
L	= free length	(mm)
E	= elastic modulus 70000	(N/mm^2)
I	= second moment of area	(mm^4)

Linear system **DLZS 120, 160, 200**

Dimensions (mm)

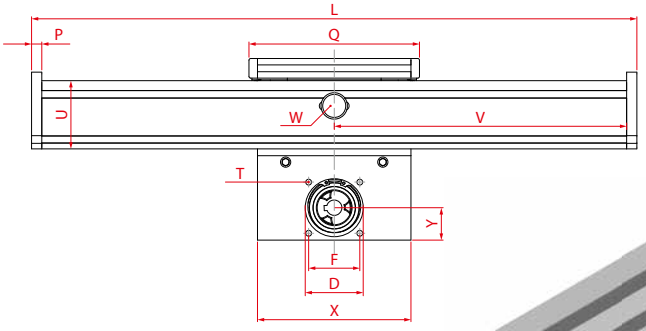

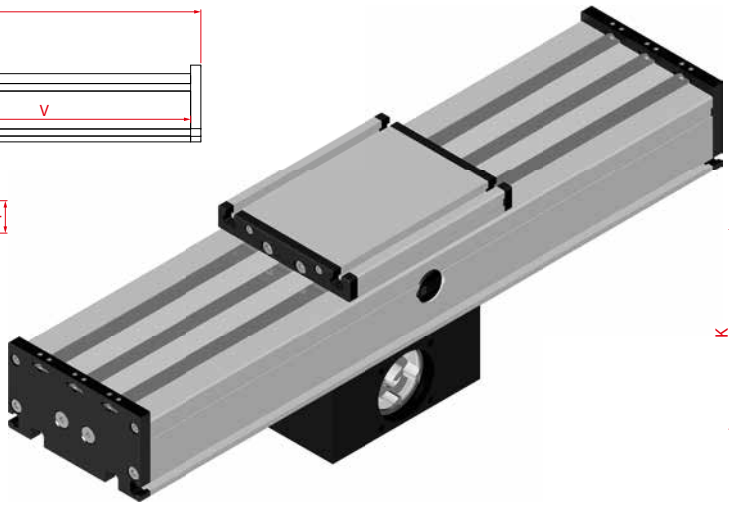

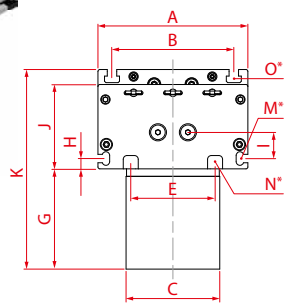

V = Q + 100 mm W = servicing position

*For slide nuts refer to chapter 2.2 page 2

Increasing the carriage length will increase the basic length by the same amount.

Size	Basic length L	A	B	C	D -0,05	E	F	G	H	I	J	K	M for	N for	O for	P	Q	R	T	U	X	Y	Basic weight	Weight per 100 mm
DLZS 120	210	120	96	80	47	78	42	84,5	10	18,7	68	163	M5	M6	M6	10	156	40	M6	60	130	30	6,1 kg	0,85 kg
DLZS 160	300	160	130	100	66	90	60	107	11	39	90	213	M6	M8	M8	12	200	25	M8	80	180	38	14,9 kg	1,5 kg
DLZS 200	380	200	160	130	90	140	80	146	15	48,5	110	275	M8	M10	M10	15	270	55	M10	100	270	60	30,8 kg	2,1 kg

0 **Choice of guide body profile:** Stainless versions upon request.

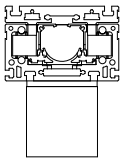

(0)
internal profile
with cover bands

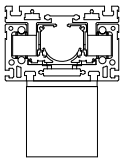

(1)
internal profile
without cover bands

0 **Choice of carriage:**

(0)

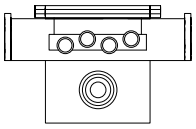

(2)

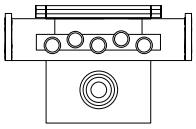

(3)

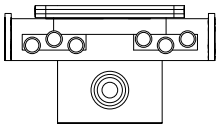

Size	Version 0		Version 2		Version 3	
	Q	L	Q	L	Q	L
120	156	210	196	216	236	256
160	200	300	250	300	>300	>330
200	270	380	330	380	>410	>470

0 **Drive version:**

0

0 1 3 4 5

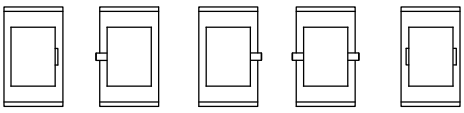

5 is as 0, but with coupling claws on both sides. The standard version is supplied without shaft. A shaft can be retrofitted by inserting it into the pulley bore and securing it with 2 locking rings or tension sets (size 200).

Belt table:

Code No.		Size	Belt	mm/rev.	Number of teeth
0	**4**	**120**	5M 25	130	26
0	**7**	**160**	8M 30	192	24
0	**9**	**200**	8M 50	256	32

Shaft dimensions / Coupling claw:

Size	Shaft ø h6 x length	Key	Coupling
120	14 x 35	5x5x28	14
160	18 x 45	6x6x40	19
200	22 x 45	6x6x40	24

DLZS	160	1	0	0	0	0	7	1	1500
	Pos.	1	2	3	4	5	6	7	

Basic length + stroke = total length

Sample ordering code:
DLZS160 with internal profile and cover bands, standard carriage, coupling claw on one side, 1200 mm stroke.

Linear system **DLZS 120 P, 160 P, 200 P**

BELT DRIVE

- INDEPENDENT INSTALLATION POSITION
- OMEGA SYSTEM
- LIFTING SYSTEM
- COVER PROFILE

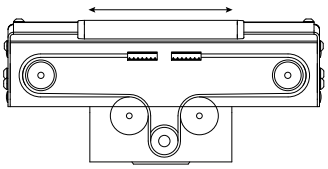

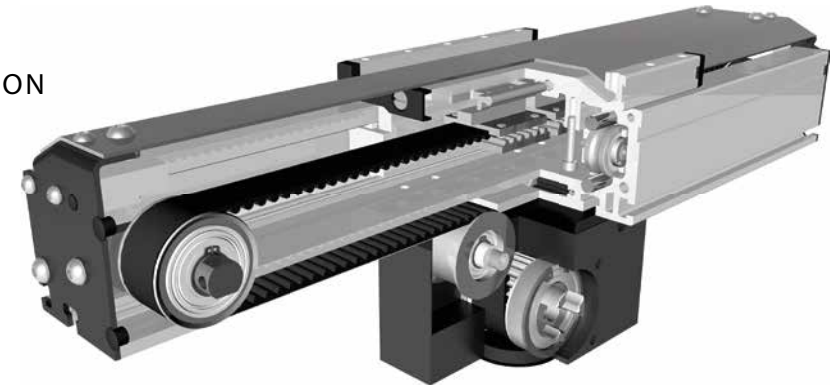

Function:
The guide body consists of a rectangular aluminium profile two integrated roller guides. The carriage is moved by a belt drive. The novelty is that the timing belt is diverted into a drive block positioned centrically. This results in an extraordinary compactness with regard to the overall length of the system. The driving toothed pulley is provided with a coupling claw as a standard. The belt tension can be easily readjusted via a tensioning device within the bearing block. The openings in the guide body are closed by an aluminium profile, leaving only small slits open on the sides. The cover profile can be adjusted according to the mounting position.
The advantages compared to the DLZS positioning system are: The number of components prone to wear such as cover bands and sliding blocks is reduced and the fact that there is no friction makes it possible to use smaller motors. In addition, the cover profile, which is fixed with only a few screws, improves the serviceability and maintainability.

Fitting position: As required. Max. length **DLZS 120P** / 1600mm, **DLZS 160P** / 1800mm, **DLZS 200P** / 2000mm
Carriage mounting: By tapped holes.
Unit mounting: By T-slots and mounting sets. The linear axis can be combined with any T-slot profile.
Belt type: HTD with steel reinforcement, no backlash when changing direction, repeatability ± 0,1 mm.
Carriage support: In the standard version, the carriage runs on 8 rollers which can be serviced at a central servicing position. For longer carriages the number of rollers can be increased.

Forces and torques

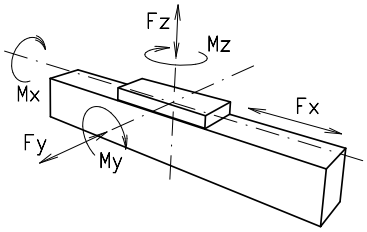

Size	120		160		200	
Forces/Torques	static	dynamic	static	dynamic.	static	dynamic.
F_x (N)	894	800	1900	1800	4000	3800
F_y (N)	1100	900	3000	2000	4400	3100
F_z (N)	1250	1000	3500	2800	4900	4400
M_x (Nm)	150	125	400	320	600	510
M_y (Nm)	140	120	360	300	560	480
M_z (Nm)	100	90	180	150	310	275

All forces and torques related to the following:

existing values / table values

$$\frac{Fy}{Fy_{dyn}} + \frac{Fz}{Fz_{dyn}} + \frac{Mx}{Mx_{dyn}} + \frac{My}{My_{dyn}} + \frac{Mz}{Mz_{dyn}} \leq 1$$

No-load torque		
Nm	1,2	1,5	1,8
Speed			
(m/s) max	4	6	8
Geometrical moments of inertia of aluminium profile			
I_x mm^4	6,6 x 10^5	22,2 x 10^5	57,2 x 10^5
I_y mm^4	38,6 x 10^5	122 x 10^5	310 x 10^5
Elastic modulus N/mm^2	70.000	70.000	70.000

For life-time calculation of rollers use our homepage.

Driving torque:

$$M_a = \frac{F * P * S_i}{2000 * \pi} + M_n$$

$$P_a = \frac{M_a * n}{9550}$$

F = force (N)
P = pulley action perimeter (mm)
Si = safety factor 1,2 … 2
M_n = no-load torque (Nm)
n = rpm pulley (min^{-1})
M_a = driving torque (Nm)
P_a = motor power (KW)

Deflection:

$$f = \frac{F * L^3}{E * I * 192}$$

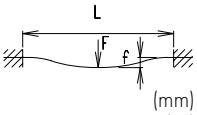

f = deflection (mm)
F = load (N)
L = free length (mm)
E = elastic modulus 70000 (N/mm²)
I = second moment of area (mm⁴)

Linear system **DLZS 120 P, 160 P, 200 P**

Dimensions (mm)

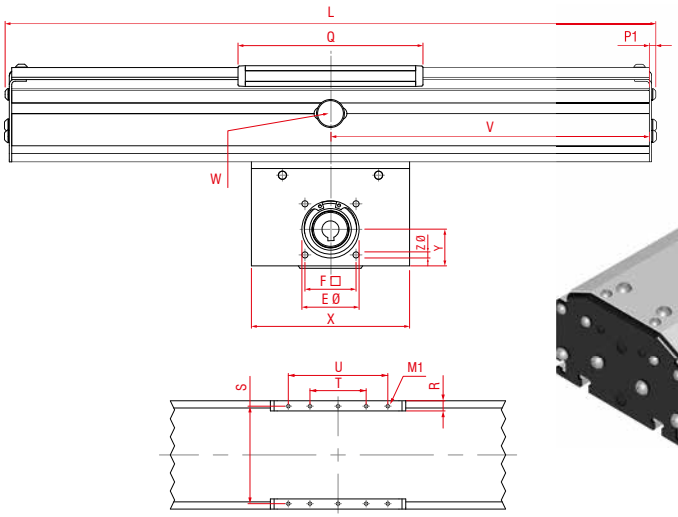

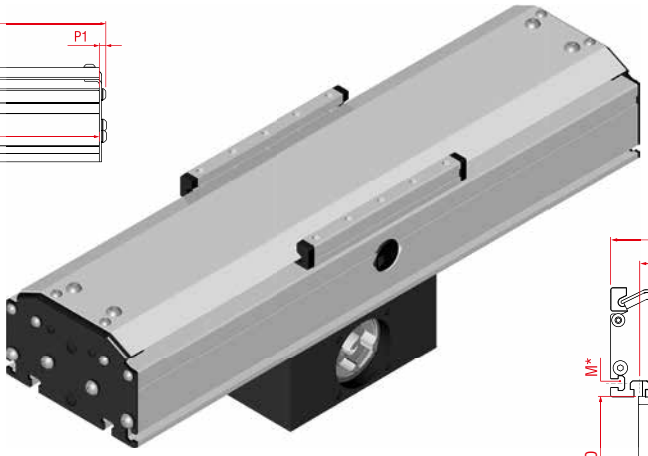

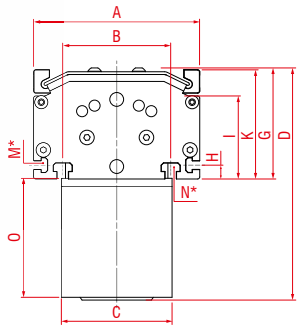

V = Q + 100 mm W = servicing position

*For slide nuts refer to chapter 2.2 page 2

Increasing the carriage length will increase the basic length by the same amount.

Size	A	B	C	D	E Ø	F □	G	H	I	K	M for	N for	O	P1	P2	R	S	T	U	X	Y	Z	Basic weight	Weight per 100 mm
DLZS 120 **P**	120	78	80	169	47	42	80,5	10	60	79	M5	M6	85,5	6	32	11,5	106	40	120	130	30	M6	5,5 kg	0,77 kg
DLZS 160 **P**	160	90	100	219	68	60	108,5	11	80	106	M6	M8	107	8,2	51,2	15	144	80	160	180	38	M8	14,1 kg	1,5 kg
DLZS 200 **P**	200	140	130	281	90	80	132,5	15	100	129	M8	M10	146	10	37,5	17	180	100	200	270	60	M10	30,2 kg	2,1 kg

DL 120 M1 = M6 x 8
only 8 threaded holes in the carriage

DL 160 M1 = M8 x 12 **DL 200** M1 = M10 x 12

8.1

0 **Choice of guide body profile:** Stainless versions upon request.

(0)

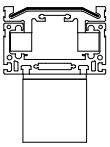

with cover profile

(1)

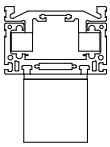

without cover profile

0 **Choice of carriages:**

(0)

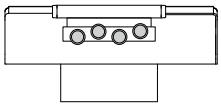

(1)

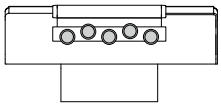

(2)

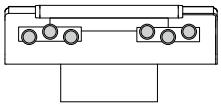

(3)

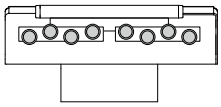

Size	Version 0		Version 1	
	Q	L	Q	L
120	152	192	192	232
160	196	282	246	332
200	256	345	320	409
	Version 2		**Version 3**	
120	232	272	---	---
160	296	382	396	482
200	396	485	521	610

0 **Drive version:**

0

0 1 3 4 5

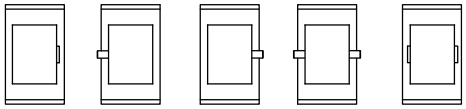

5 is as 0, but with coupling claws on both sides. The standard version is supplied without shaft. A shaft can be retrofitted by inserting it into the pulley bore and securing it with 2 locking rings or tension sets (size 200).

Belt table:

Code No.		Size	Belt	mm/rev.	Number of teeth
0	4	**120**	5M 25	130	26
0	7	**160**	8M 30	192	24
0	9	**200**	8M 50	256	32

Shaft dimensions / Coupling claw:

Size	Shaft ø h6 x length	Key	Coupling
120	14 x 35	5 x 5 x 28	14
160	18 x 45	6 x 6 x 40	19
200	22 x 45	6 x 6 x 40	24

DLZS	120 P	1	0	0	0	0	4	1	1500
	Pos.	1	2	3	4	5	6	7	

Basic length + stroke = total length

Sample ordering code:
with cover profile, standard carriage, coupling claw on one side, 1308 mm stroke.

Linear system **DLZU 120**

SURFACE PORTAL - STRENGTHENED CONSTRUCTION

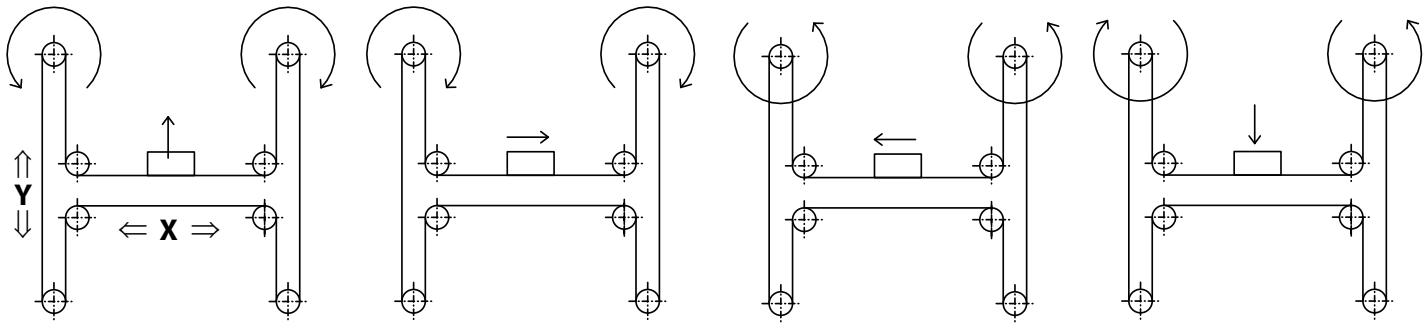

Function:
Surface gantry consisting of two Y axes and one X axis. The unit is driven by a rotating belt, which remains connected through various deflection points. Due to the stable rectangular profile high torques and loads can be taken up. In addition, a very high stability and low deflection are ensured for long axis systems. The movement is realised by two motors. The coordinate lies diagonal to the deflection points of the X axis. Advantage: Only small masses are moved and thus it is possible to achieve high accelerations.

Fitting position: As required. Max. length and width 3.000 mm.
Carriage mounting: By T-slots
Unit mounting: By T-slots or mounting sets.
Belt type: HTD with steel reinforcement, no backlash when changing direction, repeatability: ± 0,1 mm.

8.1

Forces and torques

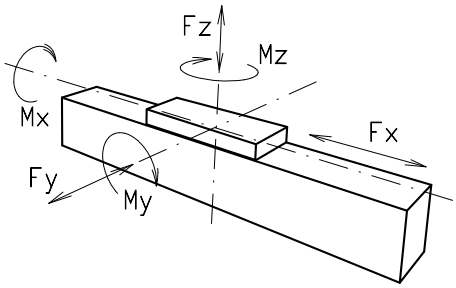

Size	120	
Forces/Torques	static	dynam.
F_x (N)	894	800
F_y (N)	1100	900
F_z (N)	1250	1000
M_x (Nm)	150	125
M_y (Nm)	140	120
M_z (Nm)	100	90
All forces and torques related to the following:		
existing values / table values	$\frac{Fy}{Fy_{dyn}} + \frac{Fz}{Fz_{dyn}} + \frac{Mx}{Mx_{dyn}} + \frac{My}{My_{dyn}} + \frac{Mz}{Mz_{dyn}} \leq 1$	
No-load torque		
Nm with cover bands	1,2	
Speed		
(m/s) max	4	
Tensile force		
permanent (N)	900	
0,2 s (N)	1000	
Geometrical moments of inertia of aluminium profile		
I_x mm^4	6,6x10^5	
I_y mm^4	38,6x10^5	
Elastic modulus N/mm^2	70000	

For life-time calculation of rollers use our homepage.

Driving torque:

$$M_a = \frac{F*P*S_i}{2000*\pi} + M_n$$

$$P_a = \frac{M_a*n}{9550}$$

F	= force	(N)
P	= pulley action perimeter	(mm)
Si	= safety factor 1,2 … 2	
M_n	= no-load torque	(Nm)
n	= rpm pulley	(min^{-1})
M_a	= driving torque	(Nm)
P_a	= motor power	(KW)

Deflection:

$$f = \frac{F*L^3}{E*I*192}$$

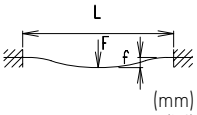

f	= deflection	(mm)
F	= load	(N)
L	= free length	(mm)
E	= elastic modulus 70000	(N/mm^2)
I	= second moment of area	(mm^4)

Linear system **DLZU 120**

Dimensions (mm)

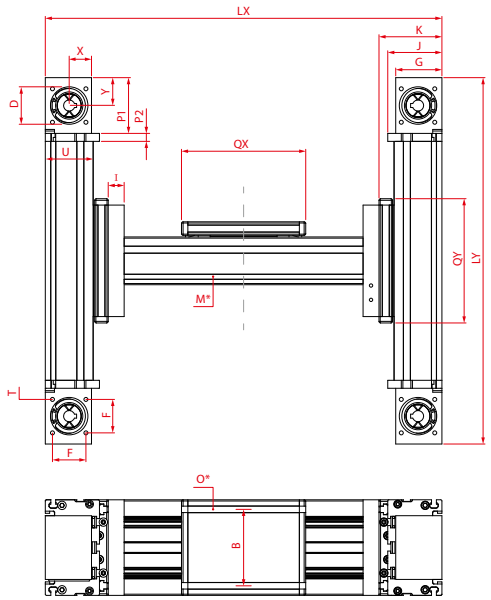

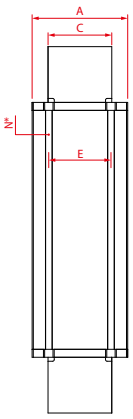

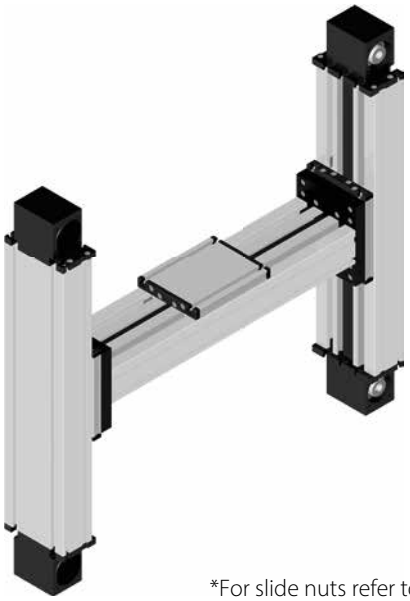

*For slide nuts refer to chapter 2.2 page 2

Size	Basic length Lx	Basic length Ly	A	B	C	D - 0,05	E	F	G	I	J	K	M für	N für	O für	P1	P2	Qx	Qy	T	U	X	Y	Basic weight	Weight per 100 mm
DLZU 120	354	316	120	96	80	47	78	42	58	20	68	79	M5	M6	M6	70	10	156	156	M6	60	28	35	14,42 kg	0,85 kg

0 **Choice of guide body profile:** Stainless versions upon request.

(1)

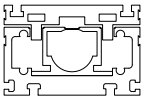

internal profile
without cover bands

(2)

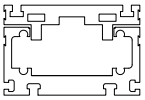

without internal profile
and cover bands

0 **Choice of carriages:**

(0)

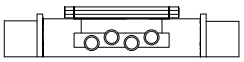

(2)

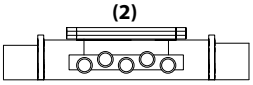

(3)

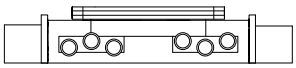

(4)

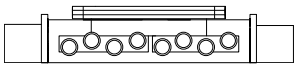

Size	Version 0				Version 2			
	Qx	Lx	Qy	Ly	Qx	Lx	Qy	Ly
120	156	354	156	316	196	394	196	356
	Version 3				**Version 4**			
	Qx	Lx	Qy	Ly	Qx	Lx	Qy	Ly
120	236	434	236	396	300	498	300	460

0 **Drive version:**

(0)

(1)

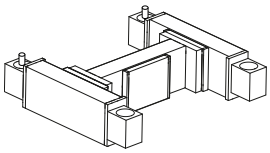

(2)

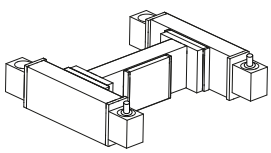

The standard version is supplied without shaft. A shaft can be retrofitted by inserting it into the pulley bore and securing it with 2 locking rings.

Belt table:

Code No.		Size	Belt	mm/rev.	Number of teeth
0	**4**	120	5M25	130	26

Shaft dimensions / Coupling claw:

Size	Shaft ø h6 x length	Key	Coupling
120	14 x 35	5x5x28	14

X-Axis Basic length + stroke = total length

Y-Axis Basic length + stroke = total length

DLZU	120	7	0	0	0	0	4	1	1500
DLZU	120	8	0	0	0	0	4	1	700
	Pos.	1	2	3	4	5	6	7	

Sample ordering code:
DLZU 120, standard guide body profile, standard carriage, coupling claw on one side, X = 1146 / Y = 384 mm stroke

Linear system **DLZU 120, 160, 200**

SURFACE PORTAL - STABLE DESIGN - ROLLER GUIDE

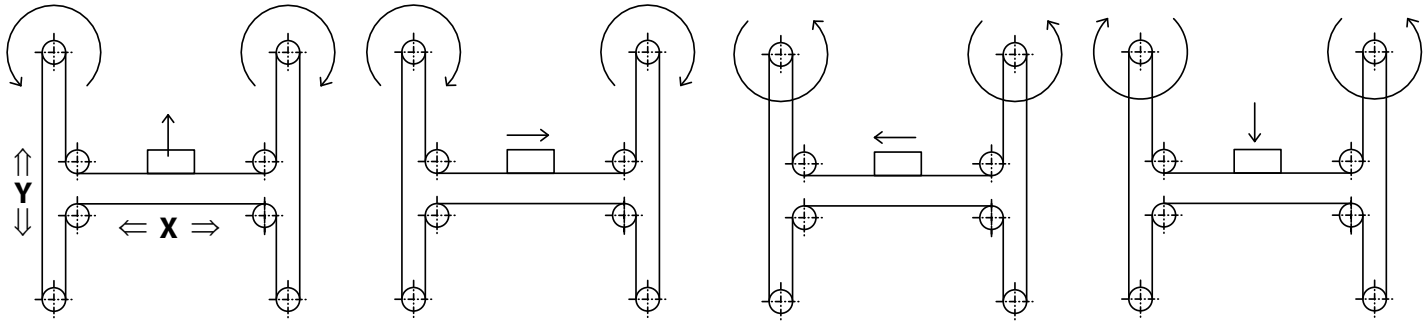

Function:
Surface portal, consisting of two Y-axes and one X-axis. Due to the stable rectangular profile, high torques and loads can be absorbed; in addition, very high stability and low deflection are ensured for long axis systems. The drive is provided by a revolving belt, which remains connected by various deflection points. The adjustment is made by two motors. The coordinate is diagonal to the deflection points of the X-axis. Advantage: Only small weights are moved and thus high accelerations are achieved. Very compact design. Can be easily positioned and used with our matching mounting kits in the accessories section.

Fitting position: As required. Max. length and width 3.000 mm.
Carriage mounting: By T-slots
Unit mounting: By T-slots or mounting sets.
Belt type: HTD with steel reinforcement, no backlash when changing direction, repeatability: ± 0,1 mm.

8.1

Forces and torques

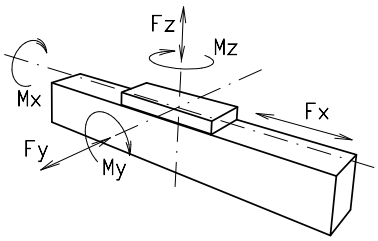

Size	120		160		200	
Forces/Torques	static	dynamic	static	dynamic	static	dynamic
F_x (N)	894	800	1900	1800	4000	3800
F_y (N)	1100	900	3000	2000	4400	3100
F_z (N)	1250	1000	3500	2800	4900	4400
M_x (Nm)	150	125	400	320	600	510
M_y (Nm)	140	120	360	300	560	480
M_z (Nm)	100	90	180	150	310	275

All forces and torques relate to the following:

existing values / table values: $\frac{Fy}{Fy_{dyn}} + \frac{Fz}{Fz_{dyn}} + \frac{Mx}{Mx_{dyn}} + \frac{My}{My_{dyn}} + \frac{Mz}{Mz_{dyn}} \leq 1$

No-load torqe			
Nm without cover band	1,2	1,5	1,8
Speed			
(m/s) max	4	6	8
Tensile force			
permanent (N)	900	1900	4000
0,2 s (N)	1000	2090	4300
Geometrical moments of inertia of aluminium profile			
I_x mm^4	6,6x10^5	22,2x10^5	63,8x10^5
I_y mm^4	38,6x10^5	122x10^5	335x10^5
E-Modulus N/mm^2	70000	70000	70000

For life-time calculation of rollers use our homepage.

Driving torque:

$$M_a = \frac{F*P*S_i}{2000*\pi} + M_n$$

$$P_a = \frac{M_a*n}{9550}$$

F	= force	(N)
P	= pulley action perimeter	(mm)
Si	= safety factor 1,2 … 2	
M_n	= no-load torque	(Nm)
n	= rpm pulley	(min^{-1})
M_a	= driving torque	(Nm)
P_a	= motor power	(KW)

Deflection:

$$f = \frac{F*L^3}{E*I*192}$$

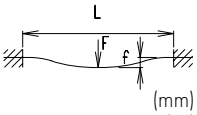

f	= deflection	(mm)
F	= load	(N)
L	= free length	(mm)
E	= elastic modulus 70000	(N/mm^2)
I	= second moment of area	(mm^4)

Linear system **DLZU 120, 160, 200**

Dimensions (mm)

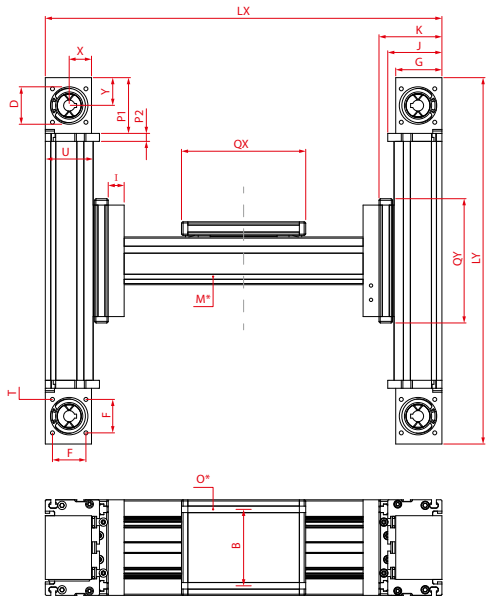

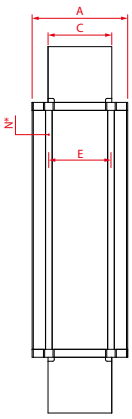

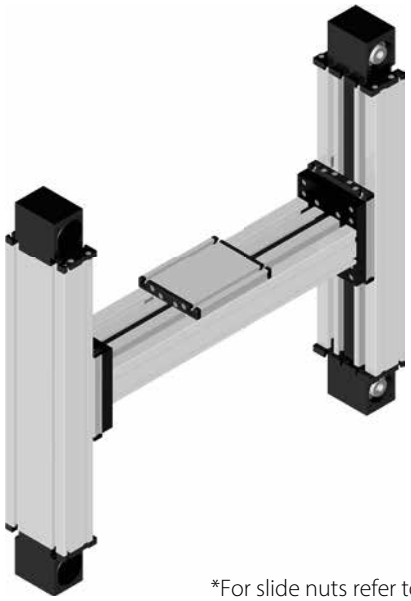

*For slide nuts refer to chapter 2.2 page 2

Size	Basic length Lx	Basic length Ly	A	B	C	D - 0,05	E	F	G	I	J	K	M for	N for	O for	P1	P2	Qx	Qy	T	U	X	Y	Basic weight	Weight per 100 mm
DLZU 120	354	316	120	96	80	47	78	42	58	20	68	79	M5	M6	M6	70	10	156	156	M6	60	28	35	14,42 kg	0,85 kg
DLZU 160	462	414	160	130	100	68	90	60	78	25	90	106	M6	M8	M8	95	12	200	200	M8	80	39	45	34,23 kg	1,69 kg
DLZU 200	648	540	200	160	130	90	140	80	97	50	110	129	M8	M10	M10	110	15	270	290	M10	100	49	50	74,11 kg	2,33 kg

8.1

0 **Choice of guide body profile:** Stainless versions upon request.

(1)

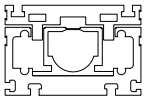

internal profile
without cover bands

(2)

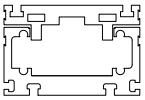

without internal profile
and cover bands

0 **Choice of carriages:**

(0)

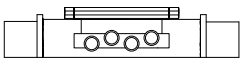

(2)

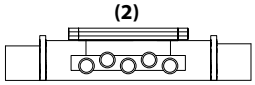

(3)

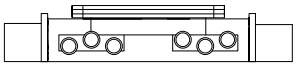

(4)

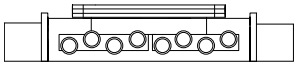

Size	Version 0				Version 2			
	Qx	Lx	Qy	Ly	Qx	Lx	Qy	Ly
120	156	354	156	316	196	394	196	356
160	200	462	200	414	250	512	250	464
200	270	648	290	540	320	688	330	580
	Version 3				**Version 4**			
	Qx	Lx	Qy	Ly	Qx	Lx	Qy	Ly
120	236	434	236	396	300	498	300	460
160	300	562	300	514	--	--	--	--
200	410	768	410	660	--	--	--	--

0 **Drive version:**

(0)

(1)

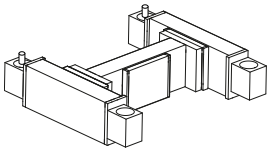

(2)

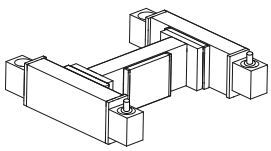

The standard version is supplied without shaft. A shaft can be retrofitted by inserting it into the pulley bore and securing it with 2 locking rings.

Belt table:

Code Nr.		Size	Belt	mm/rev.	Number of teeth
0	**4**	120	5M25	130	26
0	**7**	160	8M30	176	22
0	**9**	200	8M50	224	28

Shaft dimensions / Coupling claw:

Size	Shaft ø h6 x length	Key	Coupling
120 (5M25)	14 x 35	5x5x28	14
160 (8M30)	18 x 45	6x6x40	19
200 (8M50)	22 x 45	6x6x40	24

DLZU	120	7	0	0	0	0	4	1	1500

X-Axis Basic length + stroke = total length

Y-Axes Basic length + stroke = total length

DLZU	120	8	0	0	0	0	4	1	700
	Pos.	1	2	3	4	5	6	7	

For combination kits and connecting elements refer to chapter 2.2

Sample ordering code:
DLZU 120, with standard body profile, standard carriage, coupling claw on one side, stroke X = 1074 / Y = 370 mm

Linear system **DLR 120, 160, 200**

ROLLER UNIT

- WITHOUT DRIVE
- SUPPORT UNIT

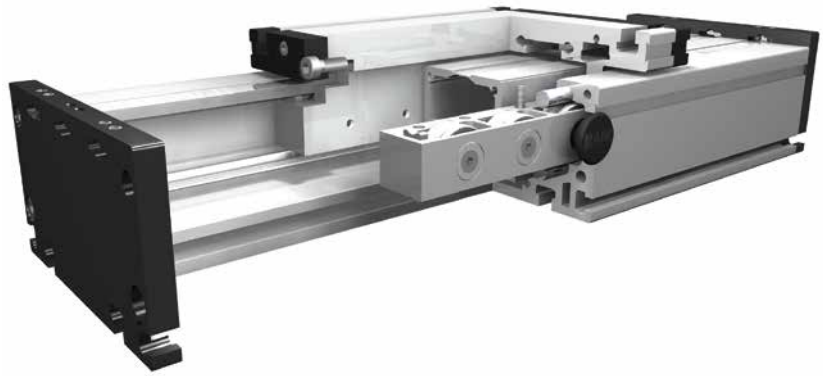

Function:
This unit consists of a rectangular aluminium profile with 2 integrated roller guides. The openings of the guide body are sealed with 3 stainless steel cover bands to protect the guide from splash water and dust. Alternatively, it can also be supplied without cover bands. The roller guide can be either driven by an internal pneumatic cylinder or other additional drives or it serves as load carrying linear slide.

Fitting position: As required. Max. length 6.000 mm without joints.
Carriage mounting: By T-slots.
Unit mounting: By T-slots and mounting sets. The linear axis can be combined with any T-slot profile.
Carriage support: In the standard version, the carriage runs on 8 rollers which can be adjusted and serviced at a central servicing position. For longer carriages the number of rollers can be increased.

Forces and torques

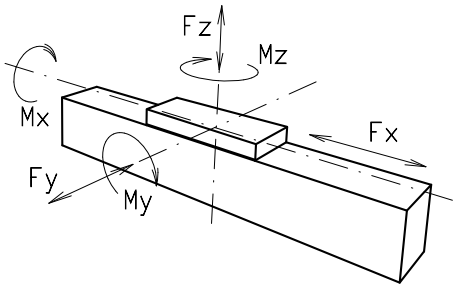

Size	120		160		200	
Forces/Torques	static	dynamic	statisch	dynam.	statisch	dynam.
F_x (N)	-	-	-	-	-	-
F_y (N)	1100	900	3000	2000	4400	3100
F_z (N)	1250	1000	3500	2800	4900	4400
M_x (Nm)	150	125	400	320	600	510
M_y (Nm)	140	120	360	300	560	480
M_z (Nm)	100	90	180	150	310	275

All forces and torques related to the following:

existing values / table values: $\frac{Fy}{Fy_{dyn}} + \frac{Fz}{Fz_{dyn}} + \frac{Mx}{Mx_{dyn}} + \frac{My}{My_{dyn}} + \frac{Mz}{Mz_{dyn}} \leq 1$

Speed			
(m/s) max	4	6	8
Geometrical moments of inertia of aluminium profile			
I_x mm^4	6,6x10^5	22,2x10^5	63,8x10^5
I_y mm^4	38,6x10^5	122,0x10^5	335,0x10^5
Elastic modulus N/mm^2	70000	70000	70000

For life-time calculation of rollers use our homepage.

Deflection:

$$f = \frac{F * L^3}{E * I * 192}$$

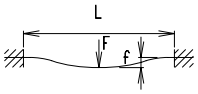

f = deflection (mm)
F = load (N)
L = free length (mm)
E = elastic modulus 70000 (N/mm^2)
I = second moment of area (mm^4)

Linear system **DLR 120, 160, 200**

Dimensions (mm)

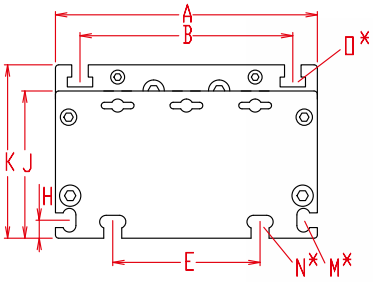

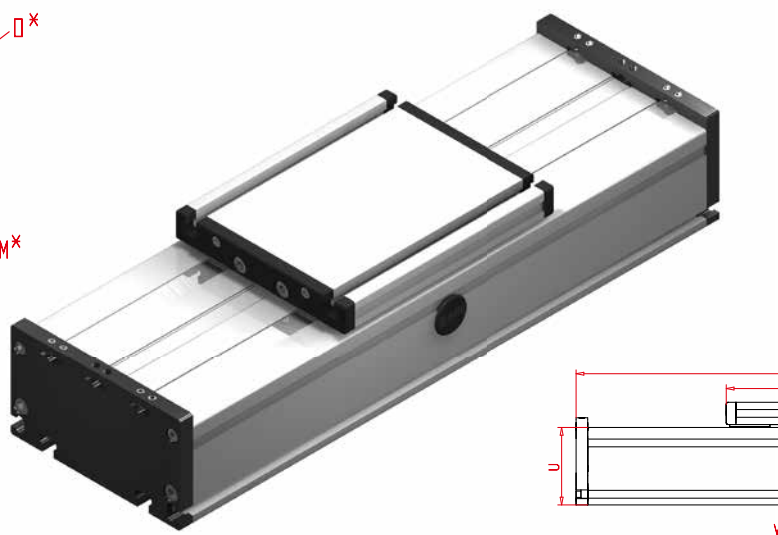

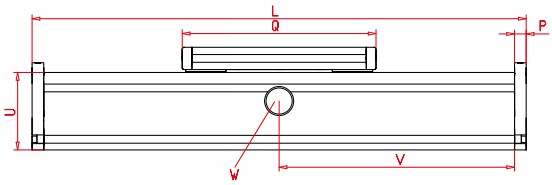

V = Q + 100 mm
W = servicing position

*For slide nuts refer to chapter 2.2 page

Increasing the carriage length will increase the basic length by the same amount.

Size	Basic length L	A	B	E	H	J	K	M for	N for	O for	P	Q	U	Basic weight	Weight per 100 mm
DLR 120	200	120	96	78	10	68	79	M 5	M 6	M 6	10	156	60	3,2 kg	0,71 kg
DLR 160	240	160	130	90	11	90	106	M 6	M 8	M 8	12	200	80	6,9 kg	1,42 kg
DLR 200	320	200	160	140	15	110	129	M 8	M 10	M 10	15	270	100	11,4 kg	2,30 kg

0 **Choice of guide body profile:** Stainless versions upon request.

(0)

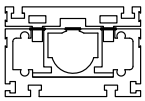

internal profile
with cover bands

(1)

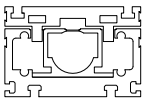

internal profile
without cover bands

(2)

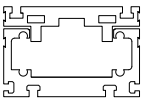

without internal profile
and cover bands

0 **Choice of carriages:**

(0)

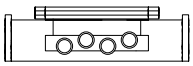

(2)

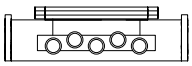

(3)

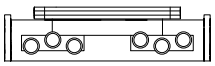

Size	Version 0		Version 2		Version 3	
	Q	L	Q	L	Q	L
120	156	200	196	240	>236	>280
160	200	240	250	290	>300	>340
200	270	320	330	380	>410	>470

DLR	160	0	0	0	0	0	0	0	01500
	Pos.	1	2	3	4	5	6	7	

Basic length + stroke = total length

Sample ordering code:
DLR160, with internal profile and cover bands, standard rollers, 1260 mm stroke.

Dust sealing D 160, 200 Systems

Without cable chain
Code-No.: 028x0

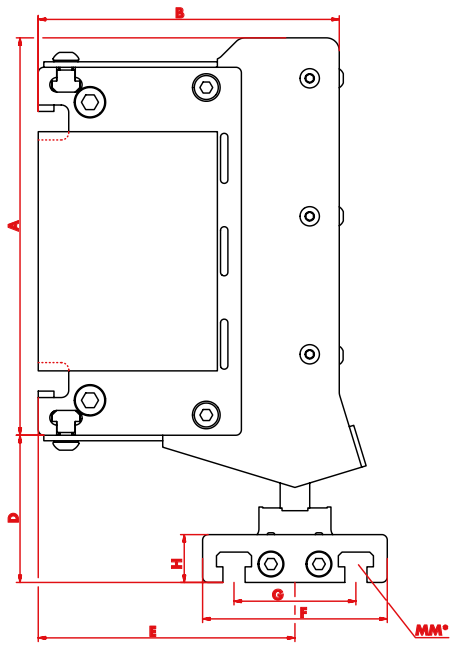

With cable chain
Code-No.:028x1

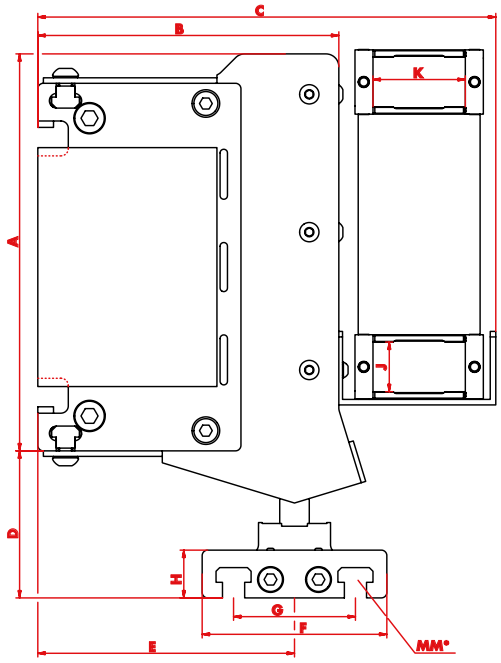

8.1

Function:
The dust seal consists of a specially formed aluminium sheet which is provided with a smooth running brush and is available either with or without energy chain take-up. This cover makes it possible to retrofit existing D 160, 200 positioning systems with a sealing.

*For slide nuts refer to carriage profile QL/QS chapter 2.2 page 2

Code-No.	for Size	Basic length L	A	B	C	D	E	F	G	H	J	K	MM for	Basic weight	Weight per 100 mm
02840	**D** 160	**	176	143	-	78	119	80	50	23	-	-	M 8	** kg	0,40 kg
02841	**D** 160	**	176	143	228	78	119	80	50	23	27	50	M 8	** kg	0,54 kg
02850	**D** 200	**	216	163	-	80	139	80	50	23	-	-	M 8	** kg	0,46 kg
02851	**D** 200	**	216	163	248	80	139	80	50	23	27	50	M 8	** kg	0,60 kg

** System dependent

02851	**2000**

Sample ordering code:
D200 Dust sealing with cable chain, 2000 mm length

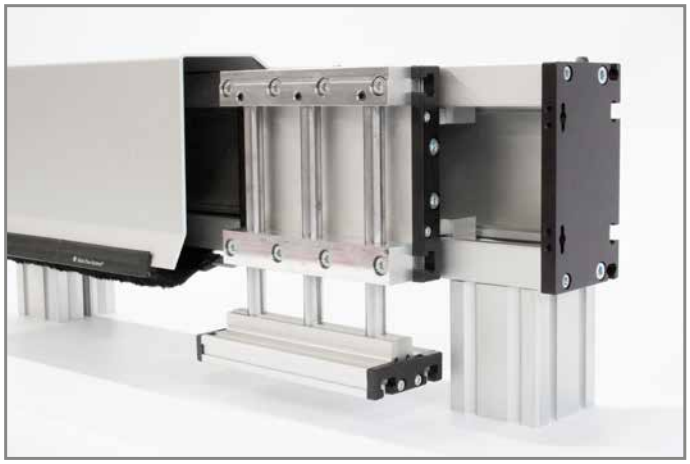

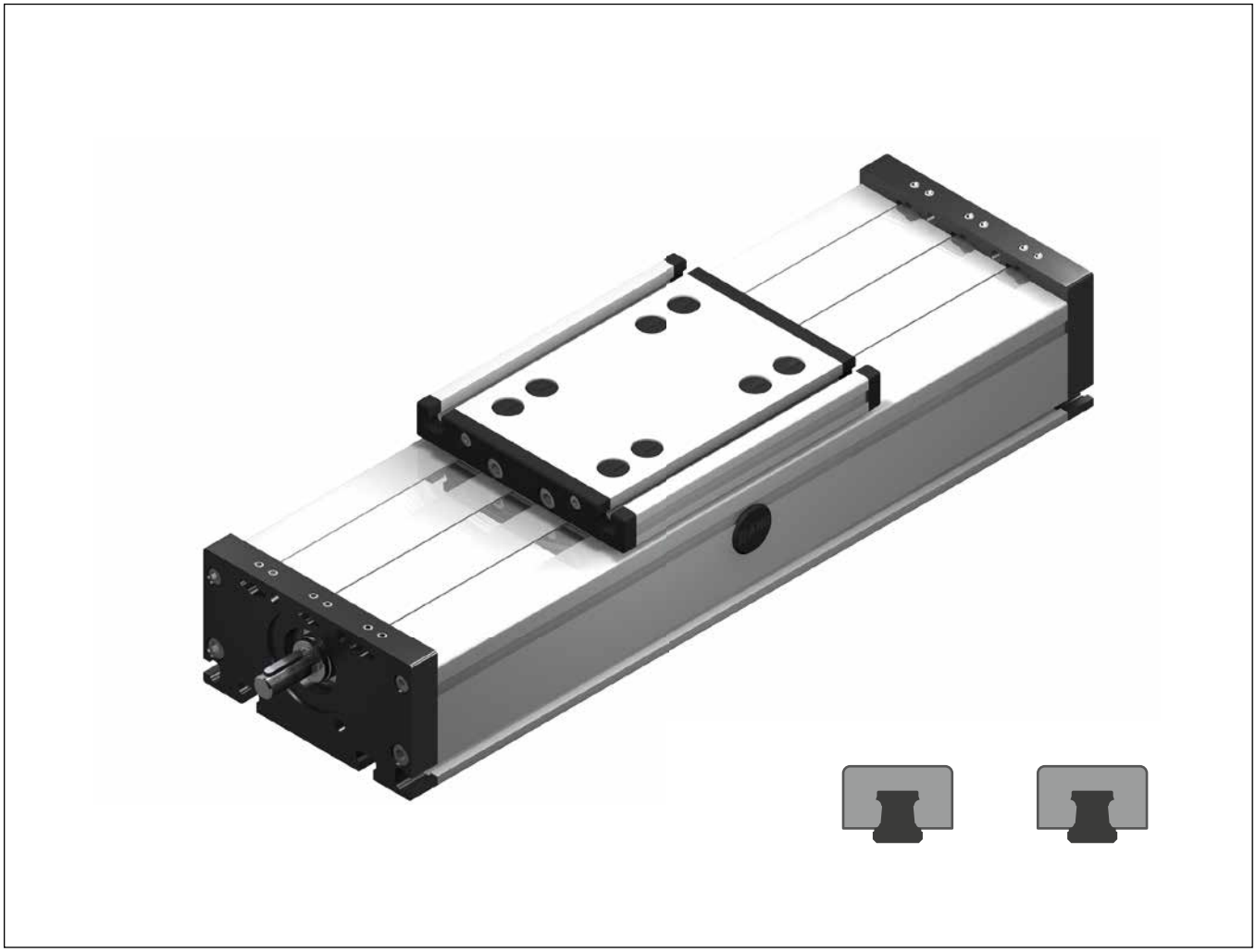

DS
Rail guide

Linear system **DST/DSK 120, 160, 200**

SPINDLE DRIVES

- INDEPENDENT INSTALLATION POSITION
- PRECISION
- UNIVERSAL SYSTEM
- HIGH TORQUE ABSORPTION

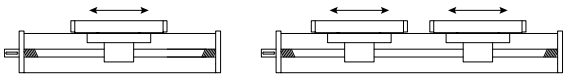

Function:
This unit consists of a rectangular aluminium profile with 2 integrated rail guides. The carriage is driven by means of a rotating spindle with leading nut. Where two parallel linear units are used or where two carriages are mounted on one unit, the leading-nut receiver can be used to adjust the symmetry of the carriages. The openings of the guide body are sealed with 3 stainless steel cover bands to protect the drive from splash water and dust.

Fitting position: As required. Max. length 3.000 mm without joints.
Carriage mounting: By T-slots.
Unit mounting: By T-slots and mounting sets. The linear axis can be combined with any T-slot profile.
Carriage support: In the standard version, the carriage runs on 4 runner blocks which can be serviced at a central servicing position. For longer carriages the number of runner blocks can be increased.
Repeatability: Ballscrew ± 0,025 mm, trapezoidal thread ± 0,2 mm.

9.1

Forces and torques

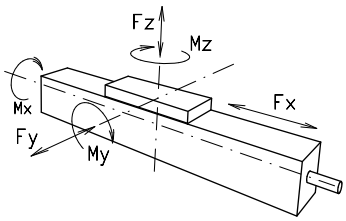

Size	120		160		200			
permitted dyn. Forces*	5000 km	10000 km	5000 km	10000 km	5000 km		10000 km	
F_x (N)	900	800	5000	4000	10000		8000	
F_y (N)	1776	1405	5570	3900	15600		11080	
F_z (N)	2090	1650	7050	5020	20600		14600	
M_x (Nm)	81	64	358	255	1285		915	
M_y (Nm)	97	77	369	262	1375		980	
M_z (Nm)	96	76	364	258	1345		960	
All forces and torques related to the following:								
existing values / table values	$\frac{Fy}{Fy_{dyn}} + \frac{Fz}{Fz_{dyn}} + \frac{Mx}{Mx_{dyn}} + \frac{My}{My_{dyn}} + \frac{Mz}{Mz_{dyn}} \leq 1$							
No-load torque								
Trapezoidal thread	18 x 4	18 x 8	24 x5	24 x 10	32 x 6	32 x 12		
(Nm)	0,8	1,1	1,0	1,3	1,5	1,7		
Ballscrew	16 x 5	16 x 10	25 x 5	20 x 20	32 x 5	32 x 10	32 x 20	32 x 32
(Nm)	0,7	1,0	1,0	1,2	1,3	1,6	1,7	1,7
Geometrical moments of inertia of aluminium profile								
I_x mm⁴	$5{,}61 \times 10^5$		$2{,}13 \times 10^6$		$4{,}81 \times 10^6$			
I_y mm⁴	$34{,}19 \times 10^5$		$12{,}33 \times 10^6$		$26{,}0 \times 10^6$			
Elastic modulus N/mm²	70000		70000		70000			

For life-time calculation use our homepage.

** referred to life-time*

Driving torque:

$$M_a = \frac{F * P * S_i}{2000 * \pi * \mu} + M_n$$

$$P_a = \frac{M_a * n}{9550}$$

F	= force	(N)
P	= thread pitch	(mm)
Si	= safety factor 1,2 … 2	
M_n	= no-load torque	(Nm)
n	= rpm of screw	(min^{-1})
M_a	= driving torque	(Nm)
μ	= screw efficiency	
P_a	= motor power	(KW)

Efficiency of lead screws:

All ballscrew		0,900
Tr	24x5	0,384
Tr	24x10	0,550
Tr	32x6	0,360
Tr	32x12	0,524

Deflection:

$$f = \frac{F * L^3}{E * I * 192}$$

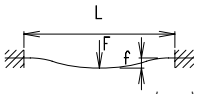

f	= deflection	(mm)
F	= load	(N)
L	= free length	(mm)
E	= elastic modulus 70000	(N/mm²)
I	= second moment of area	(mm⁴)

For the diagram for critical speeds of lead screws refer to chapter 4.2

Linear system **DST/DSK 120, 160, 200**

Dimensions (mm)

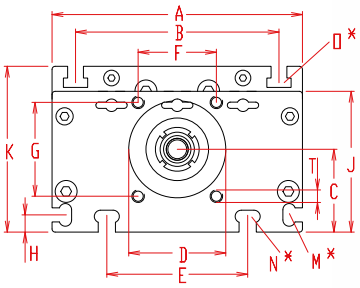

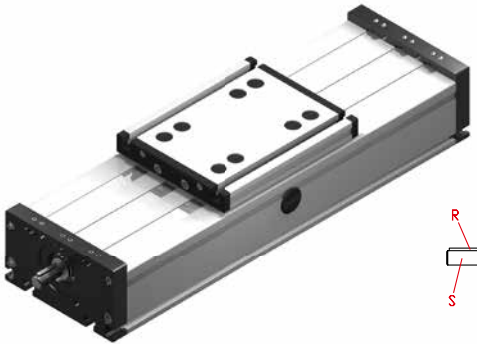

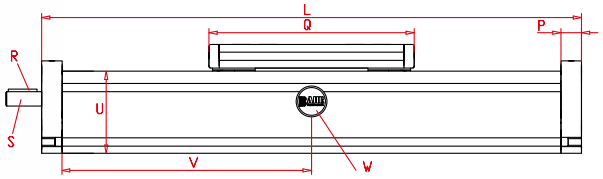

V = Q + 100 mm
W = servicing position

*For slide nuts refer to chapter 2.2 page 2

Increasing the carriage length will increase the basic length by the same amount.

Size	Basic length L	A	B	C	D +0,1 +0,05	E	F	G	H	J	K	M for	N for	O for	P	Q	Shaft R Key	Shaft S Ø h6 x length	T	U	Basic weight	Weight per 100 mm
DS 120	200	120	96	39	47	78	42	42	10	68	79	M 5	M 6	M 6	15	156	3x3x25	10 x 27	M 6	60	3,9 kg	0,92 kg
DS 160	260	160	130	53	62	90	50	60	11	90	106	M 6	M 8	M 8	20	200	5x5x28	14 x 35	M 8	80	7,2 kg	2,1 kg
DS 200	320	200	160	66	68	140	60	60	15	110	129	M 8	M 10	M 10	20	270	6x6x40	22 x 45	M 8	100	19,4 kg	3,5 kg

T **Spindle:**
(T) Trapezoidal thread **(K)** Ballscrew

1 **Selection of screw:**
(1) right hand **(2)** left hand (Ballscrew by inquiry)

0 **Choice of guide body profile:** Stainless versions upon request.

(0)

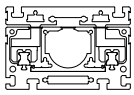

internal profile
with cover bands

0 **Choice of carriages:**

(0)

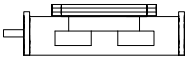

(1)

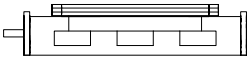

Size	Version 0 Q	Version 0 L	Version 1 Q	Version 1 L
120	156	200	156	200
160	200	260	>230	>290
200	270	320	>310	>360

0 **Drive version:**
(0) one shaft (locating bearing side) **(1)** one shaft (non-locating bearing side) **(2)** shaft on both sides

0

Selection of screw:	**Size**	**Standard**	**Multistart screw**			
Ballscrew right hand	120	**(0)** 16x5	**(1)** 16x10	**(2)** 16x16	**(3)** 20x20	**(4)** 25x5	**(5)** 25x10
	160	**(0)** 25x5	**(1)** 20x20	**(2)** 25x10	**(3)** 25x25		
	200	**(0)** 32x5	**(1)** 32x10	**(2)** 32x20	**(3)** 32x32		
Ballscrew left hand	upon request					
Trapezoidal right hand thread	120	**(0)** 18x4	**(1)** 18x8			
	160	**(0)** 24x5	**(1)** 24x10			
	200	**(0)** 32x6	**(1)** 32x12			
Trapezoidal left hand thread	120	**(0)** 18x4	**(1)** 18x8			
	160	**(0)** 24x5	**(1)** 24x10			
	200	**(0)** 32x6	**(1)** 32x12			

0 **Ballscrew pitch accuracy:**
(0) 0,05 mm / 300 mm (Standard) **(2)** 0,025 mm / 300 mm

0 **End play of ball nut:**
(0) 0,04 mm (Standard) **(1)** < 0,02 mm **(2)** 2% apply prestress

DS	T	160	1	0	0	0	0	0	0	1500
		Pos.	1	2	3	4	5	6	7	

Basic length + stroke = total length

Sample ordering code:
DST160, trapezoidal right hand thread, with internal profile and cover bands, standard carriage, one shaft (locating bearing side), spindle 24x5, 1240 mm stroke.

Linear system **DST/DSK 120, 160, 200**

RIGHT-HAND AND LEFT-HAND THREAD OR DIVIDED SPINDLES

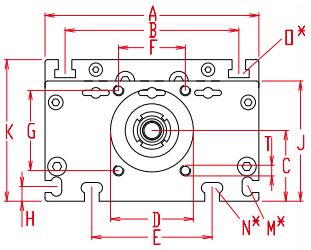

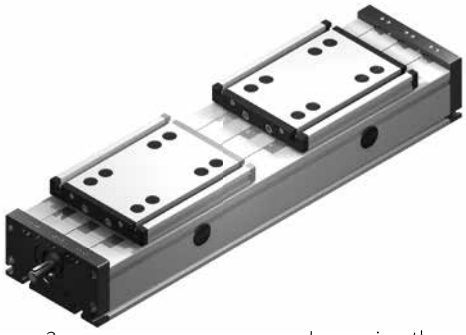

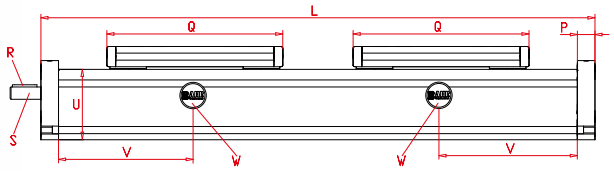

V = Q + 100 mm
W = servicing position

*For slide nuts refer to chapter 2.2 page 2

Increasing the carriage length will increase the basic length by the same amount.

Size	Basic length L	A	B	C	D +0,1 +0,05	E	F	G	H	J	K	M for	N for	O for	P	Q	Shaft R Key	Shaft S Ø h6 x length	T	U	Basic weight	Weight per 100 mm
DS 120	360	120	96	39	47	78	42	42	10	68	79	M 5	M 6	M 6	15	156	3x3x25	10 x 27	M 6	60	5,1 kg	0,92 kg
DS 160	470	160	130	53	62	90	50	60	11	90	106	M 6	M 8	M 8	20	200	5x5x28	14 x 35	M 8	80	10,1 kg	2,1 kg
DS 200	590	200	160	66	68	140	60	60	15	110	129	M 8	M 10	M 10	20	270	6x6x40	22 x 45	M 8	100	35,9 kg	3,5 kg

T **Spindle:**
(T) Trapezoidal thread **(K)** Ballscrew

3 **Selection of screw:**
(3) right - left hand (ballscrew by inquiry) **(4)** divided spindle

0 **Choice of guide body profile:** Stainless versions upon request.

(0)

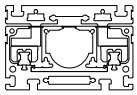

internal profile
with cover bands

0 **Choice of carriages:**

(0) **(1)**

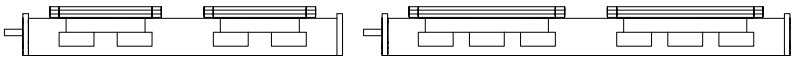

Size	Version 0 Q	Version 0 L	Version 1 Q	Version 1 L
120	156	360	156	360
160	200	470	>230	>530
200	270	590	>310	>680

0 **Drive version:**
(0) shaft right hand thread **(1)** shaft left hand thread **(2)** shaft on both sides

0

Selection of screw:	Size	Standard	Multistart screw				
Ballscrew right hand	120	**(0)** 16x5	**(1)** 16x10*	**(2)** 16x16*	**(3)** 20x20*	**(4)** 25x5	**(5)** 25x10*
	160	**(0)** 25x5	**(1)** 20x20*	**(2)** 25x10*	**(3)** 25x25*		
	200	**(0)** 32x5	**(1)** 32x10*	**(2)** 32x20*	**(3)** 32x32*		
Ballscrew left hand	upon request						
Trapezoidal right hand thread	120	**(0)** 18x4	**(1)** 18x8				
	160	**(0)** 24x5	**(1)** 24x10				
	200	**(0)** 32x6	**(1)** 32x12				
Trapezoidal left hand thread	120	**(0)** 18x4	**(1)** 18x8				
	160	**(0)** 24x5	**(1)** 24x10				
	200	**(0)** 32x6	**(1)** 32x12				

** = only for selection of divided spindle*

0 **Ballscrew pitch accuracy:**
(0) 0,05 mm / 300 mm (Standard) **(2)** 0,025 mm / 300 mm

0 **End play of ball nut:**
(0) 0,04 mm (Standard) **(1)** < 0,02 mm **(2)** 2% apply prestress

DS	T	160	3	0	0	0	0	0	01500
	Pos.		1	2	3	4	5	6	7

Basic length + stroke = total length

Sample ordering code:
DST160, trapezoidal right - left hand thread, with internal profile and cover bands, standard carriage, shaft on right hand thread, spindle 24x5,1030 mm stroke.

Possible mounting styles

QSZ 80 - DSZ 160 - QSK 80

DSZPVI 120

Linear system **DST/DSK 120 P, 160 P, 200 P**

SPINDLE DRIVES

- INDEPENDENT INSTALLATION POSITION
- PRECISION
- UNIVERSAL SYSTEM
- COVER PROFILE

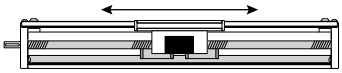

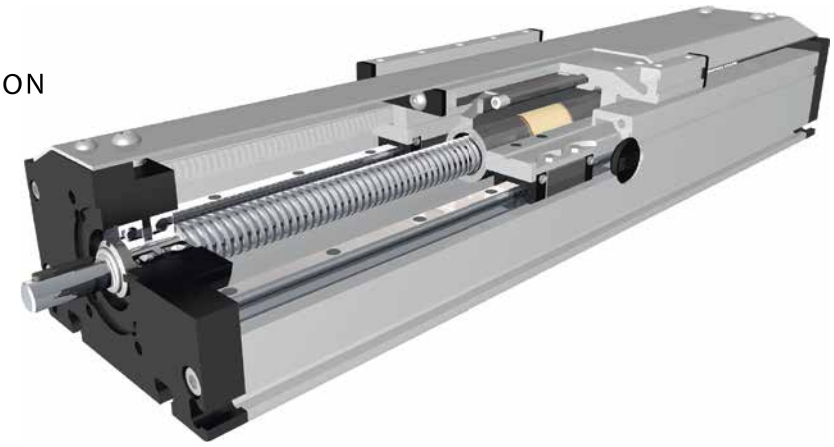

Function:
This unit consists of a rectangular aluminium profile with 2 integrated rail guides. The carriage is driven by means of a rotating spindle with leading nut. Where two parallel linear units are used or where two carriages are mounted on one unit, the leading-nut receiver can be used to adjust the symmetry of the carriages. A special curved aluminium sheet is covering the carriage side. There is only a small gap between carriage and aluminium sheet. The cover profile can be adjusted according to the mounting position.

Fitting position: As required, max. length **DST/K 120P** / 1600mm, **DST/K 160P** / 1800mm, **DST/K 200P** / 2000mm
Carriage mounting: By tapped holes.
Unit mounting: T-slots
Carriage support: In the standard version, the carriage runs on 4 runner blocks which can be serviced at a central servicing position. For longer carriages the number of runner blocks can be increased. Repeatability:
Ballscrew ± 0,025 mm, trapezoidal thread ± 0,2 mm.

9.1

Forces and torques

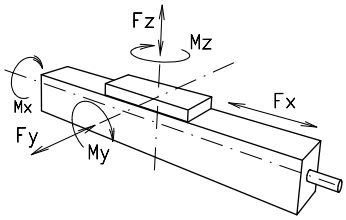

Size	120		160		200			
permitted dyn. Forces*	5000 km	10000 km	5000 km	10000 km	5000 km		10000 km	
F_x (N)	900	800	5000	4000	10000		8000	
F_y (N)	1776	1405	5570	3900	15600		11080	
F_z (N)	2090	1650	7050	5020	20600		14600	
M_x (Nm)	81	64	358	255	1285		915	
M_y (Nm)	97	77	369	262	1375		980	
M_z (Nm)	96	76	364	258	1345		960	
All forces and torques related to the following: existing values / table values $\frac{Fy}{Fy_{dyn}} + \frac{Fz}{Fz_{dyn}} + \frac{Mx}{Mx_{dyn}} + \frac{My}{My_{dyn}} + \frac{Mz}{Mz_{dyn}} \leq 1$								
No-load torque								
Trapezoidal thread	18 x 4	18 x 8	24 x5	24 x 10	32 x 6	32 x 12	--	--
(Nm)	0,8	1,1	1,0	1,3	1,5	1,7	--	--
Ballscrew	16 x 5	16 x 10	25 x 5	20 x 20	32 x 5	32 x 10	32 x 20	32 x 32
(Nm)	0,7	1,0	1,0	1,2	1,3	1,6	1,7	1,7
Geometrical moments of inertia of aluminium profile								
I_x mm^4	5,61x10^5		2,13x10^6		4,81 x10^6			
I_y mm^4	34,19x10^5		12,33x10^6		26,0 x10^6			
Elastic modulus N/mm^2	70000		70000		70000			

For life-time calculation use our homepage.

** referred to life-time*

Driving torque:

$$M_a = \frac{F * P * S_i}{2000 * \pi * \mu} + M_n$$

$$P_a = \frac{M_a * n}{9550}$$

F	= force	(N)
P	= thread pitch	(mm)
Si	= safety factor 1,2 … 2	
M_n	= no-load torque	(Nm)
n	= rpm of screw	(min^{-1})
M_a	= driving torque	(Nm)
μ	= screw efficiency	
P_a	= motor power	(KW)

Efficiency of lead screws:

All ballscrew		0,900
Tr	24x5	0,384
Tr	24x10	0,550
Tr	32x6	0,360
Tr	32x12	0,524

Deflection:

$$f = \frac{F * L^3}{E * I * 192}$$

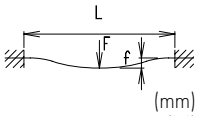

f	= deflection	(mm)
F	= load	(N)
L	= free length	(mm)
E	= elastic modulus 70000	(N/mm^2)
I	= second moment of area	(mm^4)

For the diagram for critical speeds of lead screws refer to catalog - chapter 4.2

Linear system **DST/DSK 120 P, 160 P, 200 P**

Dimensions (mm)

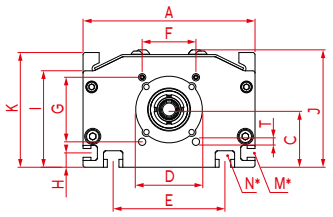

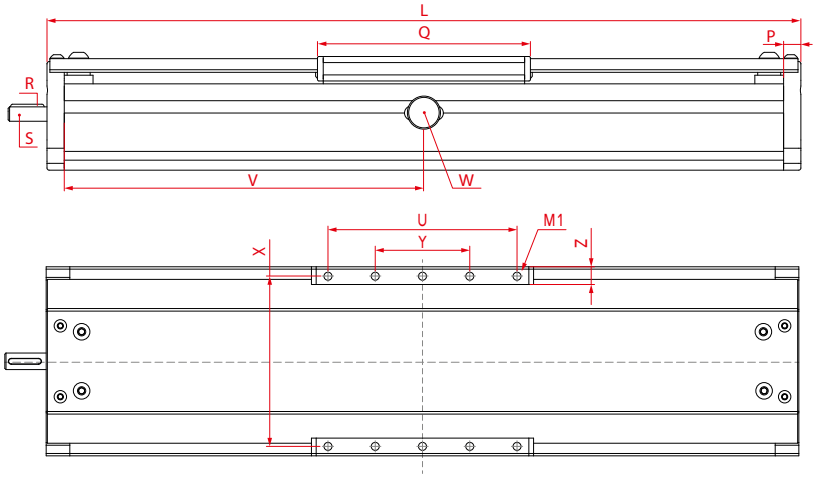

*For slide nuts refer to chapter 2.2 page 2

Increasing the carriage length will increase the basic length by the same amount.

DS 120 M1 = M6 x 8 only 8 threaded holes in the carriage

DS 160 M1 = M8 x 12 **DS 200** M1 = M10 x 12

V = Q + 100 mm W = servicing position

Size	Basic length L	A	C	D +0,1 +0,05	E	F	G	H	I	J	K	M for	N for	P	Q	Shaft R Key	Shaft S Ø h6 x length	T	U	X	Y	Z	Basic weight	Weight per 100 mm
DS 120	225	120	39	47	78	42	42	10	67	82	79	M5	M6	12	152	3x3x25	10 x 27	M6	120	106	40	11,5	3,67 kg	1,05 kg
DS 160	285	160	53	62	90	50	60	11	89	109	106	M6	M8	20	196	5x5x28	14 x 35	M8	160	144	80	15	9,45 kg	2,71 kg
DS 200	340	200	66	68	140	60	60	15	100	133	129	M8	M10	20	256	6x6x40	22 x 45	M8	200	180	100	17	17,43 kg	3,43 kg

T **Spindle:**
(T) Trapezoidal thread **(K)** Ballscrew

1 **Selection of screw:**
(1) right hand (Standard) **(2)** left hand (Ballscrew by inquiry)

0 **Choice of guide body profile:** Stainless versions upon request.

(0)

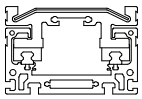

with cover profile

(1)

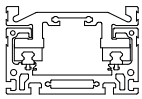

without cover profile

0 **Choice of carriages:**

(0)

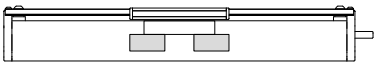

(1)

Size	Version 1 Q	Version 1 L
120	>152	>225
160	>228	>315
200	>296	>384

0 **Drive version:**
(0) one shaft (locating bearing side) **(1)** one shaft (non-locating bearing side) **(2)** shaft on both sides

0

Selection of screw:	**Size**	**Standard**	**Multistart screw**				
Ballscrew right hand	120	**(0)** 16x5	**(1)** 16x10	**(2)** 16x16	**(3)** 20x20*	**(4)** 25x5*	**(5)** 25x10*
	160	**(0)** 25x5	**(1)** 20x20	**(2)** 25x10	**(3)** 25x25		
	200	**(0)** 32x5	**(1)** 32x10	**(2)** 32x20	**(3)** 32x32		
Ballscrew left hand		upon request					
Trapezoidal right hand thread	120	**(0)** 18x4	**(1)** 18x8				
	160	**(0)** 24x5	**(1)** 24x10				
	200	**(0)** 32x6	**(1)** 32x12				
Trapezoidal left hand thread	120	**(0)** 18x4	**(1)** 18x8				
	160	**(0)** 24x5	**(1)** 24x10				
	200	**(0)** 32x6	**(1)** 32x12		* by inquiry		

0 **Ballscrew pitch accuracy:**
(0) 0,05 mm / 300 mm (Standard) **(2)** 0,025 mm / 300 mm

0 **End play of ball nut:**
(0) 0,04 mm (Standard) **(1)** < 0,02 mm **(2)** 2% apply prestress

DS	T	160 P	1	0	0	0	0	0	0	1500
		Pos.	1	2	3	4	5	6	7	

Basic length + stroke = total length

Sample ordering code:
DST 160 P, trapezoidal right hand thread, with cover profile, standard carriage, one shaft (locating bearing side), spindle 24x5, 1215 mm stroke.

Linear system **DSZ 120, 160, 200**

BELT DRIVE

UNIVERSAL SYSTEM

LONG TRAVERSE PATH >6000 MM

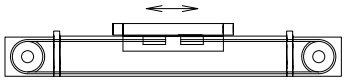

Function:
This unit consists of a rectangular aluminium profile with 2 integrated rail guidess. The carriage is moved by a belt drive. Each standard pulley has got one coupling claw on one side. Belt tension can be readjusted by a simple screw adjustment device in the carriage. This device can also be used for symmetrical adjustment of two or more linear units running parallel. The openings of the guide body are sealed with 3 stainless steel cover bands to protect the guide from splash water and dust. Alternatively, it can also be supplied without cover bands. With this series, multi-part assembled units with long strokes can be realized.

Fitting position: As required. Max. length 6.000 mm without joints.
Carriage mounting: By T-slots.
Unit mounting: By T-slots and mounting sets. The linear axis can be combined with any T-slot profile.
Belt type: HTD with steel reinforcement, no backlash when changing direction, repeatability ± 0,1 mm.
Carriage support: In the standard version, the carriage runs on 4 runner blocks which can be serviced at a central servicing position. For longer carriages the number of runner blocks can be increased.

9.1

Forces and torques

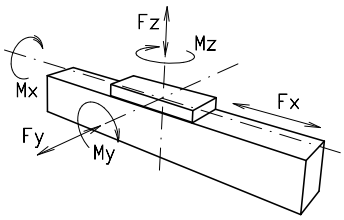

Size	120		160		200	
permitted dyn. Forces*	5000 km	10000 km	5000 km	10000 km	5000 km	10000 km
F_x (N)	894	800	1900	1800	4000	3800
F_y (N)	1776	1405	5570	3900	15600	11080
F_z (N)	2090	1650	7050	5020	20600	14600
M_x (Nm)	81	64	358	255	1285	915
M_y (Nm)	97	77	369	262	1375	980
M_z (Nm)	96	76	364	258	1345	960
All forces and torques related to the following: existing values / table values $\frac{Fy}{Fy_{dyn}} + \frac{Fz}{Fz_{dyn}} + \frac{Mx}{Mx_{dyn}} + \frac{My}{My_{dyn}} + \frac{Mz}{Mz_{dyn}} \leq 1$						
No-load torque						
Nm without cover bands	1,2		1,5		2,0	
Nm with cover bands	1,6		2,1		4	
Speed						
(m/s) max	5		5		5	
Tensile force						
permanent (N)	900		1900		4000	
0,2 s (N)	1000		2090		4300	
Geometrical moments of inertia of aluminium profile						
I_x mm^4	5,61x10^5		2,13x10^6		4,81 x10^6	
I_y mm^4	34,19x10^5		12,33x10^6		26,0 x10^6	
Elastic modulus N/mm^2	70000		70000		70000	

For life-time calculation use our homepage.

** referred to life-time*

Driving torque:

$$M_a = \frac{F*P*S_i}{2000*\pi} + M_n$$

$$P_a = \frac{M_a*n}{9550}$$

F = force (N)
P = pulley action perimeter (mm)
Si = safety factor 1,2 … 2
M_n = no-load torque (Nm)
n = rpm pulley (min^{-1})
M_a = driving torque (Nm)
P_a = motor power (KW)

Deflection:

$$f = \frac{F*L^3}{E*I*192}$$

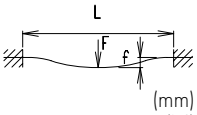

f = deflection (mm)
F = load (N)
L = free length (mm)
E = elastic modulus 70000 (N/mm^2)
I = second moment of area (mm^4)

Linear system **DSZ 120, 160, 200**

Dimensions (mm)

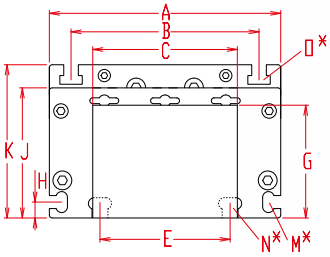

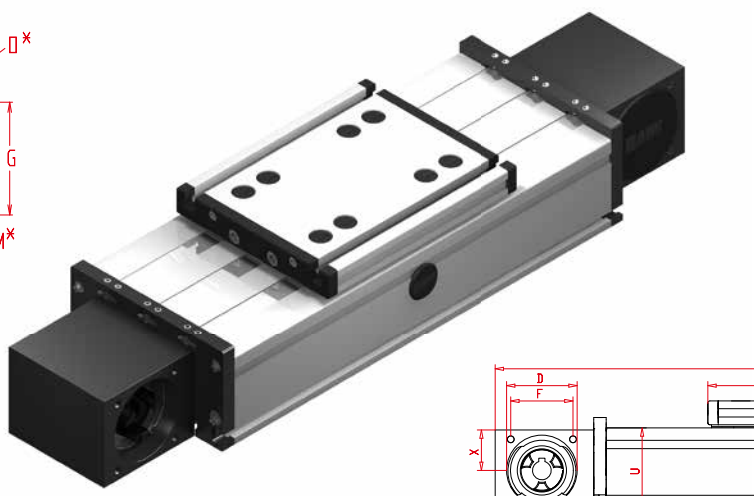

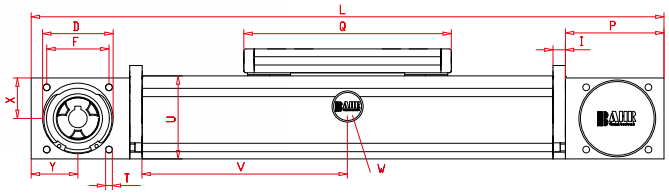

V = Q + 100 mm
W = servicing position

*For slide nuts refer to chapter 2.2 page 2

Increasing the carriage length will increase the basic length by the same amount.

Size	Basic length L	A	B	C	D -0,05	E	F	G	H	I	J	K	M for	N for	O for	P	Q	T	U	X	Y	Basic weight	Weight per 100 mm
DSZ 120	330	120	96	80	47	78	42	58	10	10	68	79	M 5	M 6	M 6	70	156	M 6	60	28	35	5,1 Kg	0,85 Kg
DSZ 160	440	160	130	100	68	90	60	78	11	12	90	106	M 6	M 8	M 8	95	200	M 8	80	39	45	12,0 kg	1,9 kg
DSZ 200	530	200	160	130	90	140	80	97	15	15	110	129	M 8	M 10	M 10	110	270	M 10	100	49	50	21,3 kg	2,9 kg

0 **Choice of guide body profile:** Stainless versions upon request.

(0)

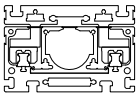

internal profile
with cover bands

(1)

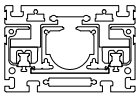

internal profile
without cover bands

(2)

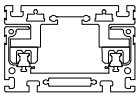

without internal profile
and cover bands

0 **Choice of carriages:**

(0)

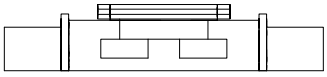

(1)

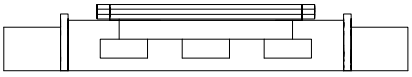

Size	Version 0		Version 1	
	Q	L	Q	L
120	156	330	156	330
160	200	440	>230	>470
200	270	530	>310	>570

0 **Drive version:**

0

0 1 2 3 4 5 6 7 8 9

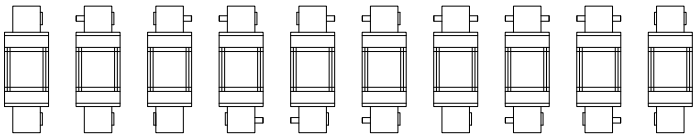

9 is as 0, but with coupling claws on both sides.
The standard version is supplied without shaft. A shaft can be retrofitted by inserting it into the pulley bore and securing it with 2 locking rings or tension sets (size 200).

Belt table:

Code No.		Size	Belt	mm/rev.	Number of teeth
0	**4**	**120**	5M25	130	26
0	**7**	**160**	8M30	176	22
0	**9**	**160**	8M50	176	22
0	**9**	**200**	8M50	224	28
1	**0**	**200**	8M70	224	28

Shaft dimensions / Coupling:

Size	Shaft ø h6 x length	Key	Coupling
120 (5M25)	14 x 35	5x5x28	14
160 (8M30)	18 x 45	6x6x40	19
160 (8M50)	25 x 35	8x7x32	---- *
200 (8M50)	22 x 45	6x6x40	24
200 (8M70)	30 x 55	8x7x50	---- *

* Coupling claw not possible with belt widening.

DSZ	**160**	**1**	**0**	**0**	**0**	**0**	**7**	**1**	**1500**
	Pos.	1	2	3	4	5	6	7	

Basic length + stroke = total length

Sample ordering code:
DSZ160 with internal profile and cover bands, standard carriage, coupling claw on one side, 1060 mm stroke.

Linear system **DSZZ 160, 200**

BELT DRIVE - WITH TWO SEPARATELY DRIVEN CARRIAGES

INDEPENDENT CARRIAGES

HORIZONTAL INSTALLATION POSITION

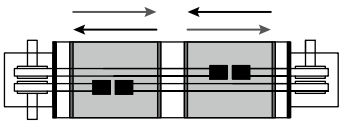

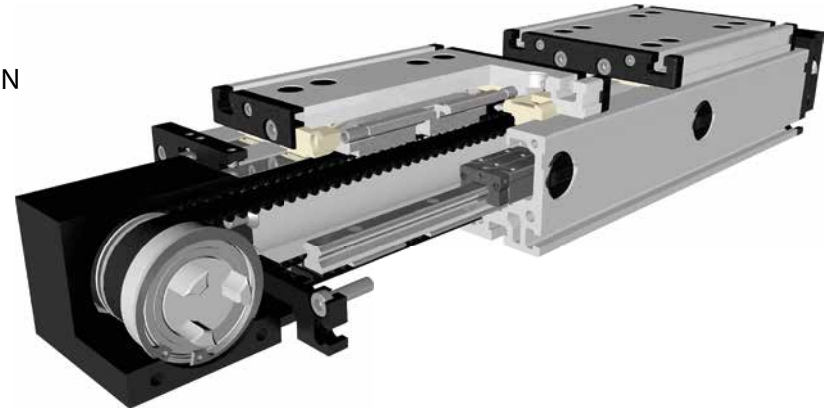

Function:
This unit consists of a rectangular aluminium profile with 2 integrated rail guides. The carriage is moved by a belt drive. Each carriage can be moved separately by its own drive. This unit has twin pulleys, which run on separate bearings, and two independent, parallel drive belts, one for each carriage. The openings of the guide body are sealed with 3 stainless steel cover bands to protect the guide from splash water and dust.

Fitting position: As required. Max. length 4.000 mm without joints.
Carriage mounting: By T-slots
Unit mounting: By T-slots and mounting sets. The linear axis can be combined with any T-slot profile.
Belt type: HTD with steel reinforcement, no backlash when changing direction, repeatability ± 0,1 mm.
Carriage support: In the standard version, the carriage runs on 4 runner blocks which can be serviced at a central servicing position. For longer carriages the number of runner blocks can be increased.

9.1

Forces and torques

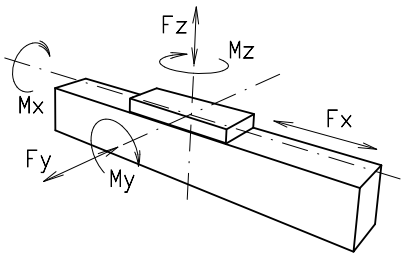

Size	160		200	
permitted dyn. Forces*	5000 km	10000 km	5000 km	10000 km
F_x (N)	1210	1100	1900	1800
F_y (N)	5570	3900	15600	11080
F_z (N)	7050	5020	20600	14600
M_x (Nm)	358	255	1285	915
M_y (Nm)	369	262	1375	980
M_z (Nm)	364	258	1345	960
All forces and torques related to the following: existing values / table values $\frac{Fy}{Fy_{dyn}} + \frac{Fz}{Fz_{dyn}} + \frac{Mx}{Mx_{dyn}} + \frac{My}{My_{dyn}} + \frac{Mz}{Mz_{dyn}} \leq 1$				
No-load torque				
Nm ohne Abdeckband	1,5		2,0	
Nm mit Abdeckband	2,1		4	
Speed				
(m/s) max	5		5	
Tensile force				
permanent (N)	1210		1900	
0,2 s (N)	1331		2090	
Geometrical moments of inertia of aluminium profile				
I_x mm^4	21,32x10^5		48,07 x10^5	
I_y mm^4	123,36x10^5		259,99 x10^5	
Elastic modulus N/mm^2	70000		70000	

For life-time calculation use our homepage.

** referred to life-time*

Driving torque:

$$M_a = \frac{F*P*S_i}{2000*\pi} + M_n$$

$$P_a = \frac{M_a*n}{9550}$$

F = force (N)
P = pulley action perimeter (mm)
Si = safety factor 1,2 … 2
M_n = no-load torque (Nm)
n = rpm pulley (min^{-1})
M_a = driving torque (Nm)
P_a = motor power (KW)

Deflection:

$$f = \frac{F*L^3}{E*I*192}$$

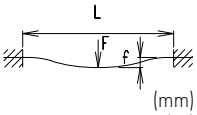

f = deflection (mm)
F = load (N)
L = free length (mm)
E = elastic modulus 70000 (N/mm^2)
I = second moment of area (mm^4)

Linear system **DSZZ 160, 200**

Dimensions (mm)

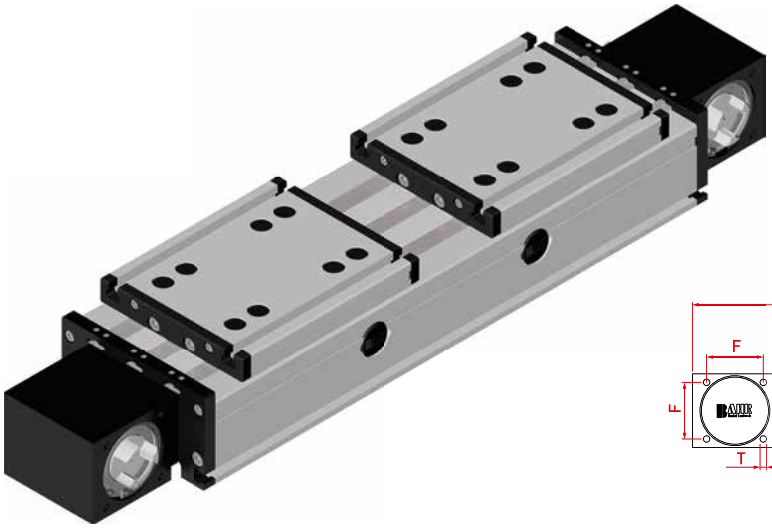

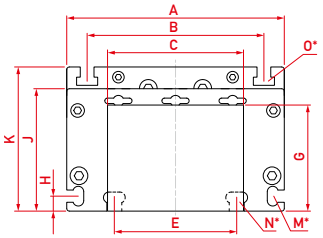

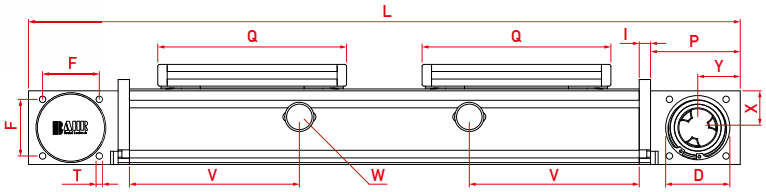

V = Q + 100 mm W = servicing position

*For slide nuts refer to chapter 2.2 page 2

Increasing the carriage length will increase the basic length by the same amount.

Size	Basic length L	A	B	C	D	E	F	G	H	I	J	K	M for	N for	O for	P	Q	T	X	Y	Basic weight	Weight per 100 mm
DSZZ 160	625	160	130	121	68	90	60	78	11	12	90	106	M6	M8	M8	95	200	M8	39	45	20,5 kg	1,95 kg
DSZZ 200	800	200	160	150	90	140	80	97	15	15	110	129	M8	M10	M10	110	270	M10	49	50	34,5 kg	2,90 kg

0 **Choice of guide body profile:** Stainless versions upon request.

(0)

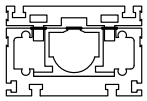

internal profile with cover bands

(1)

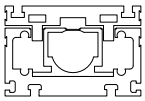

internal profile without cover bands

(2)

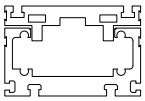

without internal profile and cover bands

0 **Choice of carriages:**

(0)

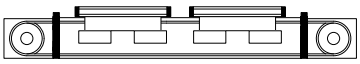

(1)

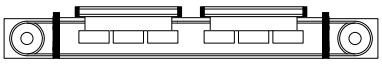

Size	Version 0		Version 1	
	Q	L	Q	L
160	200	625	230	685
200	270	800	310	880

0 **Drive version:**

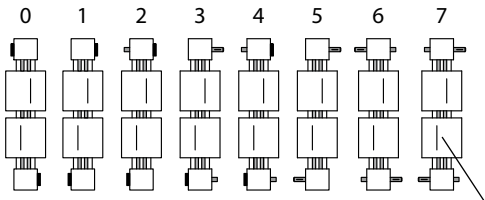

Coupling claw on one side

Standard-shaft [1]

Shaft one size smaller [2]

connected with the left belt

Belt table:

Code No.		Size	Belt	mm/rev.	Number of teeth
0	6	**160**	8M 20	176	22
0	7	**200**	8M 30	224	28

Shaft dimensions / Coupling:

Size	Shaft ø h6 x length	Key	Coupling
DSZZ 160 [1]	Ø 18 x 45	6x6x35	19
DSZZ 160 [2]	Ø 14 x 35	5x5xx28	19
DSZZ 200 [1]	Ø 22 x 45	6x6x40	24
DSZZ 200 [2]	Ø 18 x 45	6x6x40	24

DSZZ	200	4	0	0	2	0	7	1	1500
	Pos.	1	2	3	4	5	6	7	

— Basic length + stroke = total length

Sample ordering code:
DSZZ 200 with internal profile and cover bands, carriage version 0, drive version 2, 700 mm stroke.

Linear system **DSZA 160, 200**

RACK AND PINION DRIVE

- HIGH LOADS
- HIGH DYNAMICS
- LONG TRAVERSE PATH >6000 MM
- SPACE SAVING

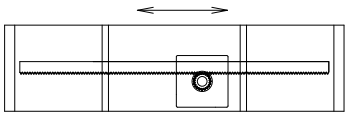

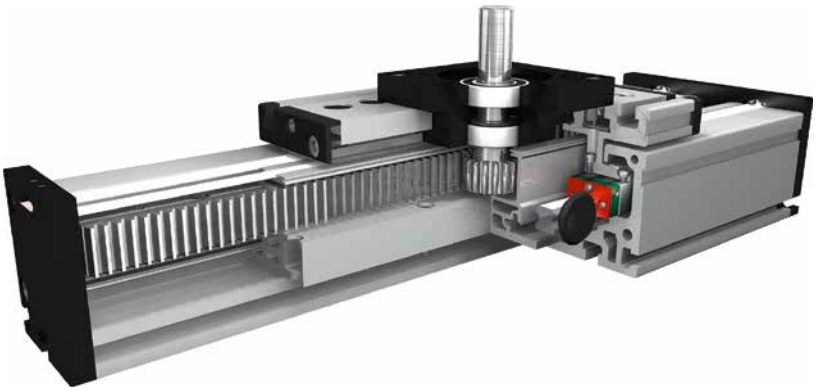

Function:
This unit consists of a rectangular aluminium profile with 2 integrated rail guides. The carriage is driven by a pinion on a high precision rack. The rack and pinion system is suitable for highly dynamic servo operation and ideal for lifting movements. The pinion is equipped with maintenance-free ball bearings. The rack is lubricated by a toothed felt wheel. With this series, multi-part assembled units with long strokes can be realized.

Fitting position: As required. Max. length 6.000 mm without joints.
Carriage mounting: By T-slots.
Unit mounting: By T-slots and mounting sets. The linear axis can be combined with any T-slot profile.
Rack: 6h23 Modul 2 (hardened and ground), repeatability ± 0,1 mm.
Carriage support: In the standard version, the carriage runs on 4 runner blocks which can be serviced at a central servicing position. For longer carriages the number of runner blocks can be increased.

9.1

Forces and torques

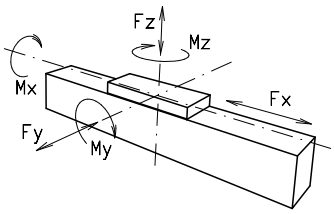

Size	120		160		200	
permitted dyn. Forces*	5000 km	10000 km	5000 km	10000 km	5000 km	10000 km
F_x (N)	894	800	1900	1800	4000	3800
F_y (N)	1776	1405	5570	3900	15600	11080
F_z (N)	2090	1650	7050	5020	20600	14600
M_x (Nm)	81	64	358	255	1285	915
M_y (Nm)	97	77	369	262	1375	980
M_z (Nm)	96	76	364	258	1345	960

All forces and torques related to the following:

existing values / table values: $\frac{Fy}{Fy_{dyn}} + \frac{Fz}{Fz_{dyn}} + \frac{Mx}{Mx_{dyn}} + \frac{My}{My_{dyn}} + \frac{Mz}{Mz_{dyn}} \leq 1$

No-load torque			
Nm without cover bands	1,2	1,5	2,0
Nm with cover bands	1,6	2,1	4
Speed			
(m/s) max	5	5	5
Tensile force			
permanent (N)	900	1900	4000
0,2 s (N)	1000	2090	4300
Geometrical moments of inertia of aluminium profile			
I_x mm^4	5,61x10^5	2,13x10^6	4,81 x10^6
I_y mm^4	34,19x10^5	12,33x10^6	26,0 x10^6
Elastic modulus N/mm^2	70000	70000	70000

For life-time calculation use our homepage.

** referred to life-time*

Driving torque:

$$M_a = \frac{F*P*S_i}{2000*\pi} + M_n$$

$$P_a = \frac{M_a*n}{9550}$$

F = force (N)
P = pulley action perimeter (mm)
Si = safety factor 1,2 … 2
M_n = no-load torque (Nm)
n = rpm pulley (min^{-1})
M_a = driving torque (Nm)
P_a = motor power (KW)

Deflection:

$$f = \frac{F*L^3}{E*I*192}$$

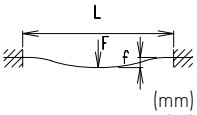

f = deflection (mm)
F = load (N)
L = free length (mm)
E = elastic modulus 70000 (N/mm^2)
I = second moment of area (mm^4)

Linear system **DSZA 160, 200**

Dimensions (mm)

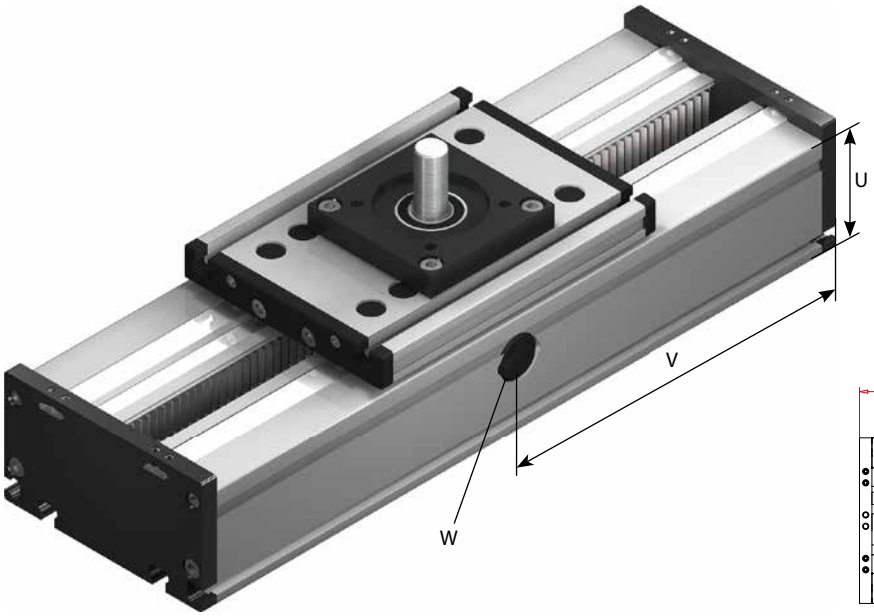

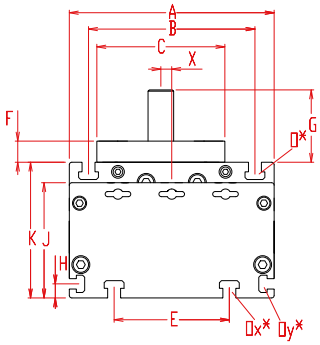

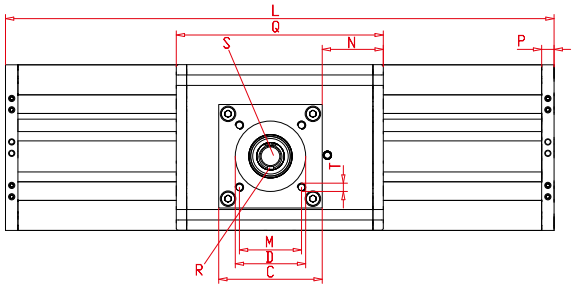

V = Q + 100 mm
W = servicing position

*For slide nuts refer to chapter 2.2 page 2

Increasing the carriage length will increase the basic length by the same amount.

Size	Basic length L	A	B	C	D ±0,05	E	F	G	H	J	K	M	N	O for	Ox for	Oy for	P	Q	T for	U	X	Basic weight	Weight per 100 mm
DSZA 160	250	160	130	100	68	90	16,5	56,5	11	90	106	60	62	M 8	M 8	M 6	12	224	M 8	80	8,5	9,4 kg	2,15 kg
DSZA 200	320	200	160	120	90	140	20	45	15	110	129	80	95	M 10	M 10	M 8	15	270	M 8	100	9	28,9 kg	7,10 kg

0 **Choice of guide body profile:** Stainless versions upon request.

(0)

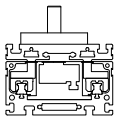

internal profile
with cover bands

(1)

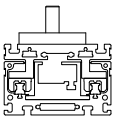

internal profile
without cover bands

0 **Choice of carriage:**

(0)

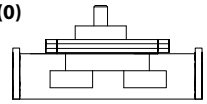

(1)

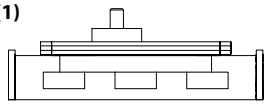

Size	Version 0		Version 1	
	Q	L	Q	L
160	224	250	360	390
200	270	320	320	360

1 **Drive version:**

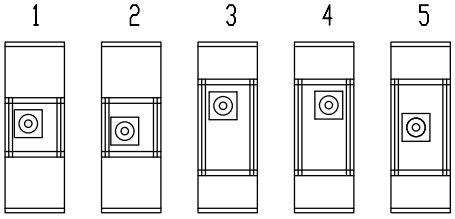

Shaft dimensions:

Size	Shaft ø h6 x length	Key	Pinion	
	S	R	mm/U	Modul
160	20 x 40	6x6x35	100,53	2
200	18 x 26	6x6x20	94,25	2

DSZA	160	1	0	0	1	0	0	1	1500
	Pos.	1	2	3	4	5	6	7	

Basic length + stroke = total length

Sample ordering code:
DSZA 160 with internal profile and cover bands, standard carriage, 1250mm stroke.

Linear system **DSZPVI 120, 160, 200**

BELT DRIVE

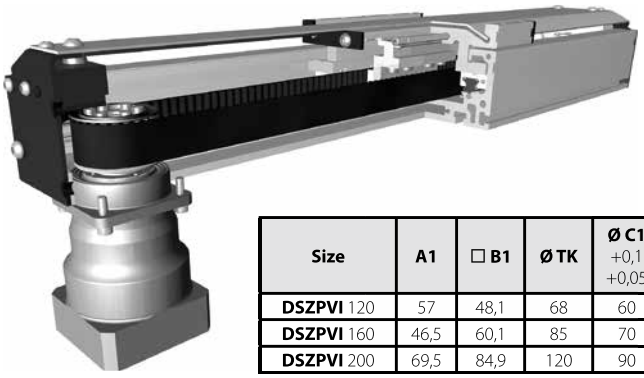

Size	A1	□ B1	Ø TK	Ø C1 +0,1 +0,05	D1	E1	F1
DSZPVI 120	57	48,1	68	60	48	16	M5
DSZPVI 160	46,5	60,1	85	70	56	22	M6
DSZPVI 200	69,5	84,9	120	90	88	32	M8

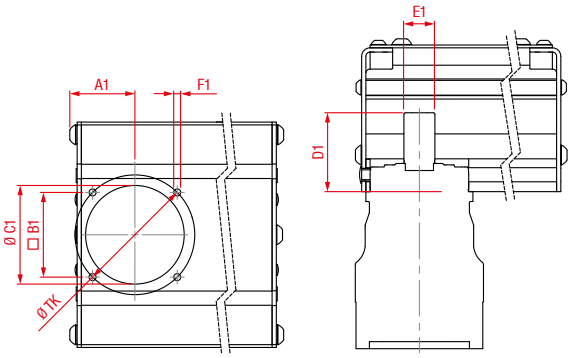

Function:
This unit consists of a rectangular aluminium profile with 2 integrated rail guides. The carriage is moved by a belt drive. On the drive side the pulley is beared on the shaft of a planetary gear. Belt tension can be readjusted by a simple screw adjustment at the opposite side of the drive. A special curved aluminium sheet is covering the carriage side. There is only a small gap between carriage and aluminium sheet. Because of its special design it is possible to drive the carriage over the pulley areas. This fact is making the unit very compact.

Fitting position: As required, max. length **DSZPVI** 120 / 1600mm, **DSZPVI** 160 / 1800mm, **DSZPVI** 200 / 2000mm
Carriage mounting: By tapped holes.
Unit mounting: T-slots
Belt type: HTD with steel reinforcement, no backlash when changing direction, repeatability ± 0,1 mm.
Carriage support: In the standard version, the carriage runs on 4 runner blocks which can be serviced at a central servicing position. For longer carriages the number of runner blocks can be increased.

9.1

Forces and torques

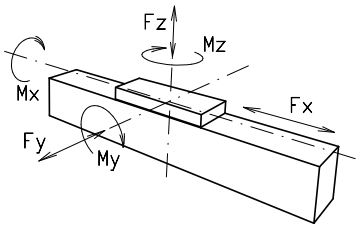

Size	120		160		200	
permitted dyn. Forces*	5000 km	10000 km	5000 km	10000 km	5000 km	10000 km
F_x (N)	894	800	1900	1800	4000	3800
F_y (N)	1776	1405	5570	3900	15600	11080
F_z (N)	2090	1650	7050	5020	20600	14600
M_x (Nm)	81	64	358	255	1285	915
M_y (Nm)	97	77	369	262	1375	980
M_z (Nm)	96	76	364	258	1345	960
All forces and torques related to the following: existing values / table values	$\frac{Fy}{Fy_{dyn}} + \frac{Fz}{Fz_{dyn}} + \frac{Mx}{Mx_{dyn}} + \frac{My}{My_{dyn}} + \frac{Mz}{Mz_{dyn}} \leq 1$					
No-load torque						
Nm without cover bands	1,2		1,5		2,0	
Speed						
(m/s) max	5		5		5	
Tensile force						
permanent (N)	900		1900		4000	
0,2 s (N)	1000		2090		4300	
Geometrical moments of inertia of aluminium profile						
I_x mm^4	5,61x10^5		2,32 x 10^5		48,07 x 10^5	
I_y mm^4	34,19x10^5		123,36 x 10^5		259,99 x 10^5	
Elastic modulus N/mm^2	70000		70000		70000	

For life-time calculation use our homepage.

** referred to life-time*

Driving torque:

$$M_a = \frac{F * P * S_i}{2000 * \pi} + M_n$$

$$P_a = \frac{M_a * n}{9550}$$

F = force (N)
P = pulley action perimeter (mm)
Si = safety factor 1,2 … 2
M_n = no-load torque (Nm)
n = rpm pulley (min^{-1})
M_a = driving torque (Nm)
P_a = motor power (KW)

Deflection:

$$f = \frac{F * L^3}{E * I * 192}$$

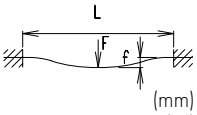

f = deflection (mm)
F = load (N)
L = free length (mm)
E = elastic modulus 70000 (N/mm^2)
I = second moment of area (mm^4)

Linear system **DSZPVI 120, 160, 200**

Dimensions (mm)

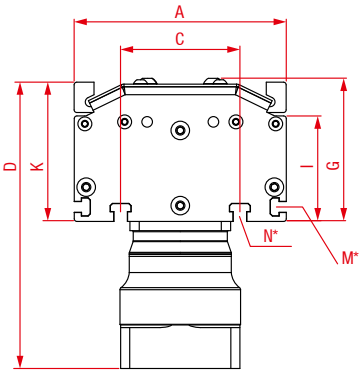

Increasing the carriage length will increase the basic length by the same amount.

Optionally available with angular planetary gearbox

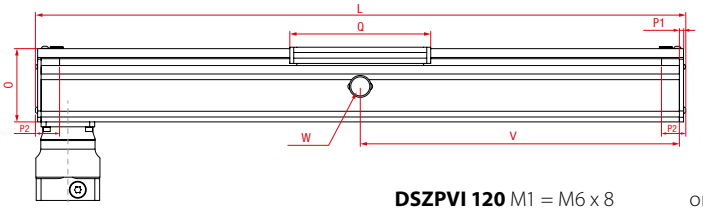

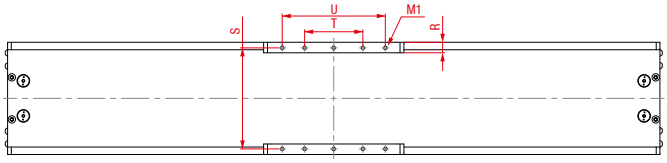

DSZPVI 120 M1 = M6 x 8 only 8 threaded holes in the carriage

*For slide nuts refer to chapter 2.2 page 2 **DSZPVI 160** M1 = M8 x 12 **DSZPVI 200** M1 = M10 x 12 W = servicing position

Size	Basic length L	A	C	D	G	I	K	M for	N for	O	P1	P2	Q	R	S	T	U	Basic weight *without gearbox*	Weight per 100 mm
DSZPVI 120	225	120	78	169	82,5	60	79,5	M5	M6	78	6	35	152	11,5	106	40	120	3,45 kg	0,87 kg
DSZPVI 160	285	160	90	217,5	108,5	80	106	M6	M8	104	8,25	43,5	196	15	144	80	160	10,27 kg	1,55 kg
DSZPVI 200	350	200	140	251	132,5	100	129	M8	M10	128	10	45,5	248	17	180	100	200	18,20 kg	2,14 kg

9.1

0 **Choice of guide body profile:** Stainless versions upon request.

(0)

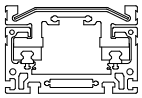

with cover profile

(1)

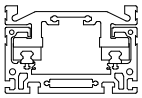

without cover profile

0 **Choice of carriages:**

(0)

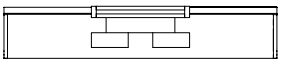

(1)

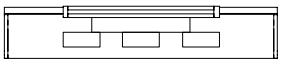

Size	Version 1	
	Q	L
120	>152	>225
160	>228	>330
200	>290	>430

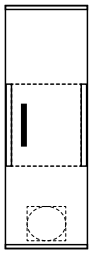

belt connection

0 **Drive version:**

(0)

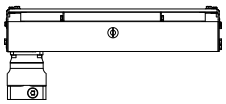

(1)

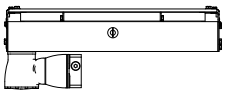

(2)

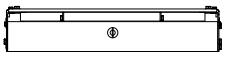

(0) planetary gearbox
(1) angular planetary gearbox
(2) without gearbox

Belt table:

Code-No.		Size	Belt	mm/rev.	Number of teeth
0	4	**120**	5M25	130	26
0	7	**160**	8M30	176	22
0	9	**200**	8M50	224	28

Gearbox variants:

Gearbox		DSZPVI 120	DSZPVI 160	DSZPVI 200
Neugart	(0)	PLN 70	PLN 90	PLN 115
	(1)	WPLN 70	WPLN 90	WPLN 115
SEW	(0)	PSKC 221	PSKC 321	PSKC 521
Wittenstein	(0)	SP+060	SP+075	SP+100
	(1)	SK+060	SK+075	SK+100

DSZPVI	160	1	0	0	0	0	7	1	1500
	Pos.	1	2	3	4	5	6	7	

Basic length + stroke = total length

Sample ordering code:
DSZPVI 160 with cover profile, standard carriage, with planetary gearbox, 1202 mm stoke.

Linear system **DSZPVI 120, 160, 200**

BELT DRIVE, WITH TWO DRIVEN CARRIAGES

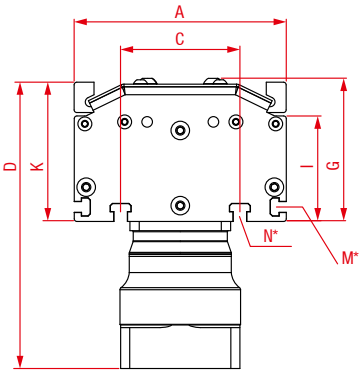

Increasing the carriage length will increase the basic length by the same amount.

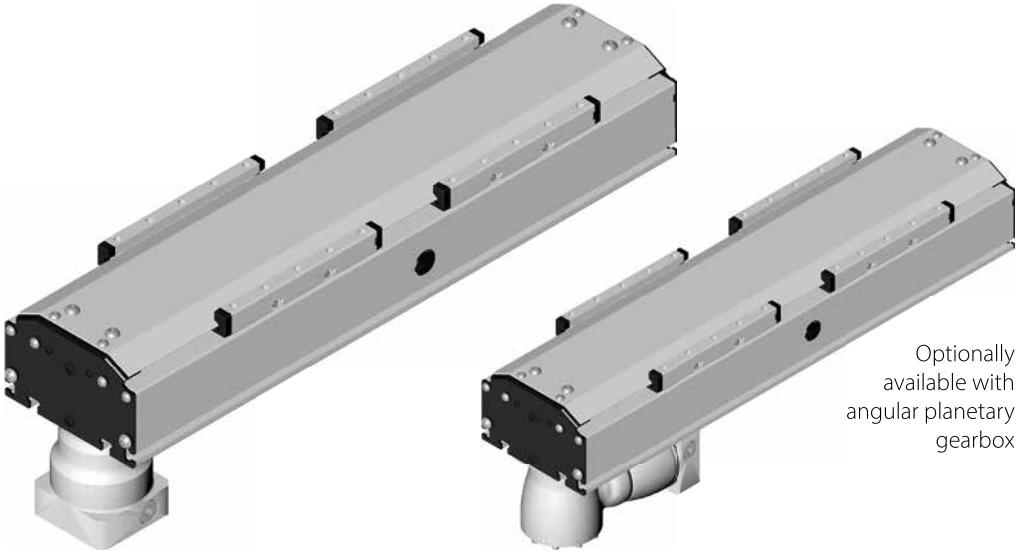

Optionally available with angular planetary gearbox

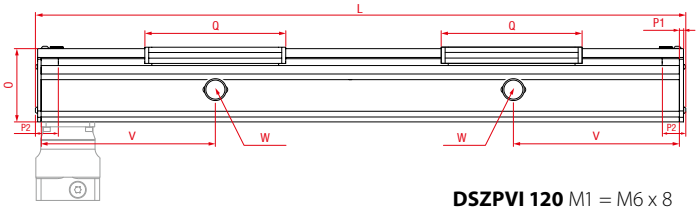

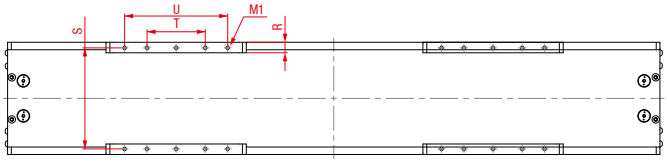

*For slide nuts refer to chapter 2.2 page 2

DSZPVI 120 M1 = M6 x 8 only 8 threaded holes in the carriage
DSZPVI 160 M1 = M8 x 12 **DSZPVI 200** M1 = M10 x 12

V = Q + 100
W = servicing position

Size	Basic length L	A	C	D	G	I	K	M for	N for	O	P1	P2	Q	R	S	T	U	Basic weight *without gearbox*	Weight per 100 mm
DSZPVI 120	380	120	78	169	82,5	60	79	M5	M6	78	2	35	152	11,5	106	40	120	4,3 kg	0,9 kg
DSZPVI 160	485	160	90	217,5	108,5	80	106	M6	M8	104	3	43,5	196	15	144	80	160	12,1 kg	2,3 kg
DSZPVI 200	600	200	140	251	132,5	100	129	M8	M10	128	3	45,5	248	17	180	100	200	22,1 kg	3,2 kg

9.1

0 **Choice of guide body profile:** Stainless versions upon request.

(0)

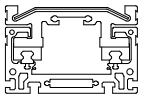

with cover profile

(1)

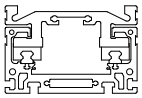

without cover profile

Baugröße	Ausführung 1	
	Q	L
120	>152	>380
160	>228	>549
200	>290	>684

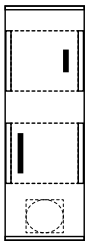

belt connection

0 **Choice of carriages:**

(0)

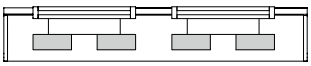

(1)

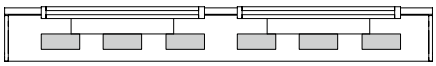

0 **Drive version:**

(0)

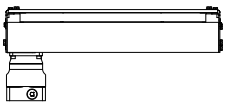

(1)

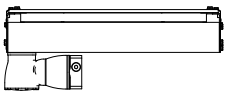

(2)

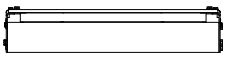

(0) planetary gearbox
(1) angular planetary gearbox
(2) without gearbox

Belt table:

Code-No.		Size	Belt	mm/rev.	Number of teeth
0	4	**120**	5M25	130	26
0	7	**160**	8M30	176	22
0	9	**200**	8M50	224	28

Gearbox variants:

Gearbox		DSZPVI 120	DSZPVI 160	DSZPVI 200
Neugart	(0)	PLN 70	PLN 90	PLN 115
	(1)	WPLN 70	WPLN 90	WPLN 115
SEW	(0)	PSKC 221	PSKC 321	PSKC 521
Wittenstein	(0)	SP+060	SP+075	SP+100
	(1)	SK+060	SK+075	SK+100

DSZPVI	160	1	0	0	0	0	7	1	1500
	Pos.	1	2	3	4	5	6	7	

Basic length + stroke = total length

Sample ordering code:
DSZPVI 160, right - left version, with cover profile, standard carriage, with planetary gearbox, 1015 mm stoke

DSZS 120 P

Linear system **DSSZ 120, 160, 200**

BELT DRIVE

- OMEGA SYSTEM
- HORIZONTAL INSTALLATION POSITION
- OFF-CENTER LOADS

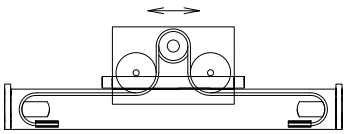

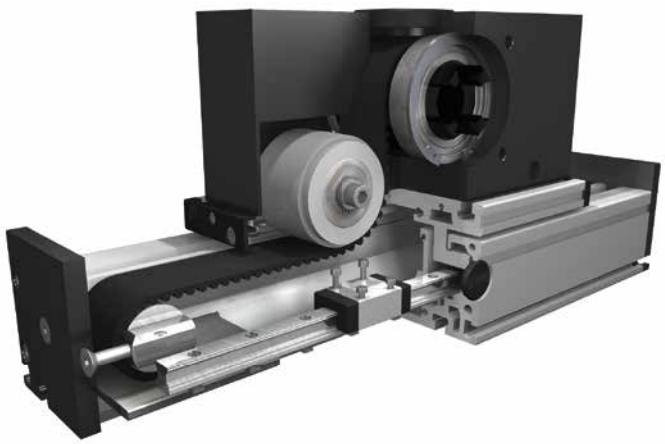

Function:
This linear unit consists of a rectangular aluminium profile with integrated rail guides. The carriage, which has runner blocks, is driven by a timing belt. Each standard pulley includes a coupling claw on one side and is equipped with maintenance-free ball bearings. Belt tension can be readjusted by a simple screw adjustment device in the carriage. This device can also be used for symmetrical adjustment of two or more linear units running parallel.

Fitting position: As required. Max. length 6.000 mm without joints.
Carriage mounting: By T-slots.
Unit mounting: By T-slots and mounting sets. The linear axis can be combined with any T-slot profile.
Belt performance: HTD with steel reinforcement, no backlash when changing direction, repeatability ± 0,1 mm.
Carriage support: In the standard version, the carriage runs on 4 runner blocks which can be serviced at a central servicing position. For longer carriages the number of runner blocks can be increased.

9.1

Forces and torques

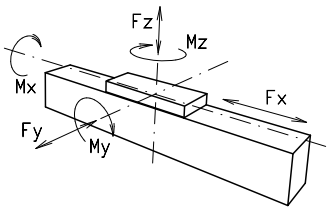

Size	120		160		200	
permitted dyn. Forces*	5000 km	10000 km	5000 km	10000 km	5000 km	10000 km
F_x (N)	1900	1800	4000	3800	5900	5750
F_y (N)	1776	1405	5570	3900	15600	11080
F_z (N)	2090	1650	7050	5020	20600	14600
M_x (Nm)	81	64	358	255	1285	915
M_y (Nm)	97	77	369	262	1375	980
M_z (Nm)	96	76	364	258	1345	960
All forces and torques related to the following: existing values / table values $\frac{Fy}{Fy_{dyn}} + \frac{Fz}{Fz_{dyn}} + \frac{Mx}{Mx_{dyn}} + \frac{My}{My_{dyn}} + \frac{Mz}{Mz_{dyn}} \leq 1$						
No-load torque						
(Nm)	1,4		1,8		2,2	
Speed						
(m/s) max	5		5		5	
Tensile force						
permanent (N)	1900		4000		5900	
0,2 s (N)	2090		4300		6350	
Geometrical moments of inertia of aluminium profile						
I_x mm^4	5,61x10^5		2,13x10^6		48,07 x10^5	
I_y mm^4	34,19x10^5		12,33x10^6		259,99 x10^5	
Elastic modulus N/mm^2	70000		70000		70000	

For life-time calculation use our homepage.

** referred to life-time*

Driving torque:

$$M_a = \frac{F*P*S_i}{2000*\pi} + M_n$$

$$P_a = \frac{M_a*n}{9550}$$

F = force (N)
P = pulley action perimeter (mm)
Si = safety factor 1,2 … 2
M_n = no-load torque (Nm)
n = rpm pulley (min^{-1})
M_a = driving torque (Nm)
P_a = motor power (KW)

Deflection:

$$f = \frac{F*L^3}{E*I*192}$$

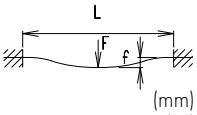

f = deflection (mm)
F = load (N)
L = free length (mm)
E = elastic modulus 70000 (N/mm^2)
I = second moment of area (mm^4)

Linear system **DSSZ 120, 160, 200**

Dimensions (mm)

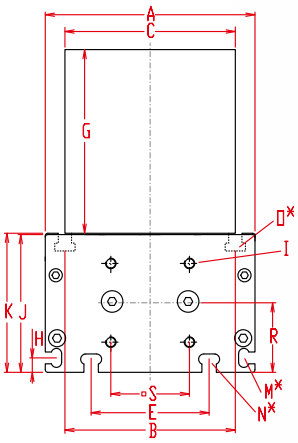

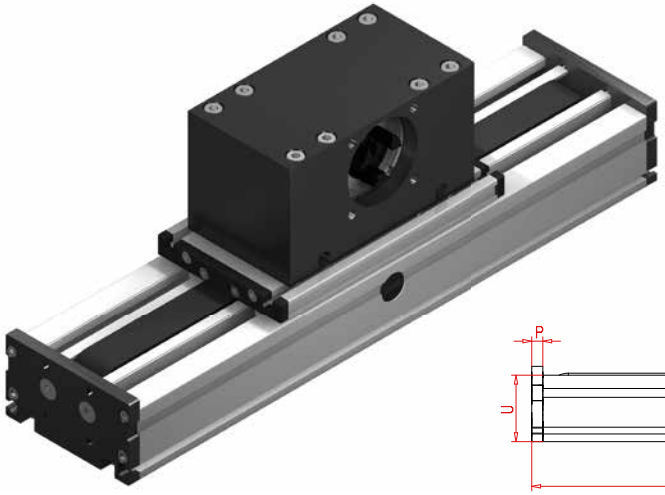

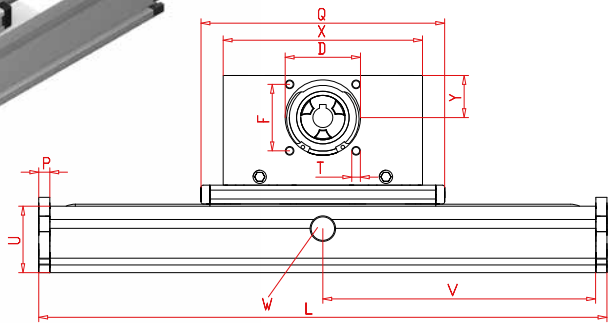

V = Q + 100 mm
W = servicing position
*For slide nuts refer to chapter 2.2 page 2

Increasing the carriage length will increase the basic length by the same amount.

Size	Basic length L	A	B	C	D -0,05	E	F	G	H	J	K	I for	M for	N for	O for	P	Q	R	S ❐	T	U	X	Y	Basic weight	Weight per 100 mm
DSSZ 120	230	120	96	100	68	78	60	100	10	68	79	M 6	M 5	M 6	M 6	10	200	39	42	M 8	60	180	39	12,0 kg	1,2 kg
DSSZ 160	330	160	130	130	90	90	80	130	11	105	106	M 8	M 6	M 8	M 8	12	290	53	60	M 10	80	270	60	27,8 kg	1,8 kg
DSSZ 200	380	200	160	160	110	140	100	143	15	128	129	M 10	M 8	M 10	M 10	15	340	62,5	95	M 10	100	310	62	53,0 kg	2,6 kg

1 **Choice of guide body profile:** Stainless versions upon request.

(1)

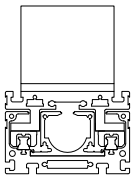

internal profile
with cover bands

(2)

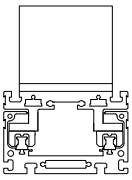

without internal profile
and cover bands

0 **Choice of carriages:**

(0)

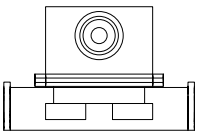

(1)

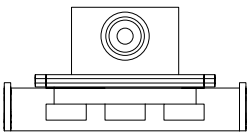

Size	Version 0		Version 1	
	Q	L	Q	L
120	200	230	200	230
160	290	330	290	330
200	340	380	340	380

0 **Drive version:**

0

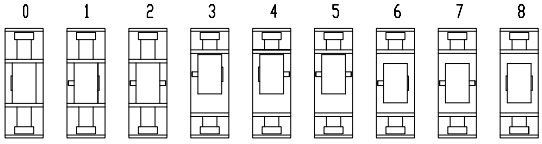

8 is as 0, but with coupling claws on both sides.The standard version is supplied without shaft. A shaft can be retrofitted by inserting it into the pulley bore and securing it with 2 locking rings or tension sets (size 200).

Belt table:

Code No.		Size	Belt	mm/rev.	Number of teeth
0	**7**	**120**	8M30	192	24
0	**9**	**160**	8M50	256	32
1	**0**	**200**	8M70	304	38

Shaft dimensions:

Size	Shaft ø h6 x length	Key
120	18 x 45	6x6x40
160	22 x 45	6x6x40
200	30 x 55	8x7x50

DSSZ	160	1	1	0	0	0	9	1	1500
	Pos.	1	2	3	4	5	6	7	

Basic length + stroke = total length

Sample ordering code:
DSSZ160, body profile with internal profile without cover bands, standard carriage, coupling claws on one side, 1170 mm stroke

Linear system **DSR 120, 160, 200**

RAIL GUIDE

- WITHOUT DRIVE
- SUPPORT UNIT

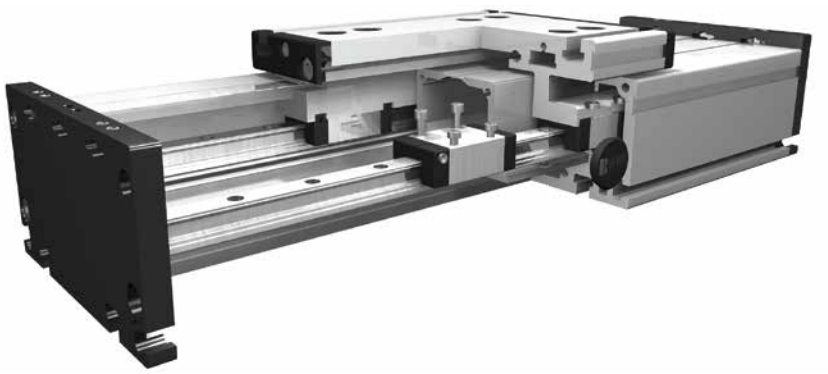

Function:
This unit consists of a rectangular aluminium profile with 2 integrated rail guidess. The openings of the guide body are sealed with 3 stainless steel cover bands to protect the guide from splash water and dust. Alternatively, it can also be supplied without cover bands. The positioning system can be either driven by an internal pneumatic cylinder or other additional drives or it serves as load carrying linear slide. Construction compatible with DSZ.

Fitting position: As required. Max. length 6.000 mm without joints.
Carriage mounting: By T-slots.
Unit mounting: By T-slots and mounting sets. The linear axis can be combined with any T-slot profile.
Carriage support: In the standard version, the carriage runs on 4 runner blocks which can be adjusted and serviced at a central servicing position. For longer carriages the number of runner blocks can be increased.

9.1

Forces and torques

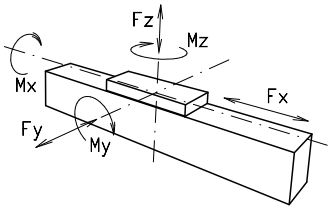

Size	120		160		200	
permitted dyn. Forces*	5000 km	10000 km	5000 km	10000 km	5000 km	10000 km
F_y (N)	1776	1405	5570	3900	15600	11080
F_z (N)	2090	1650	7050	5020	20600	14600
M_x (Nm)	81	64	358	255	1285	915
M_y (Nm)	97	77	369	262	1375	980
M_z (Nm)	96	76	364	258	1345	960

All forces and torques related to the following:

existing values / table values

$$\frac{Fy}{Fy_{dyn}} + \frac{Fz}{Fz_{dyn}} + \frac{Mx}{Mx_{dyn}} + \frac{My}{My_{dyn}} + \frac{Mz}{Mz_{dyn}} \leq 1$$

Speed			
(m/s) max	5	5	5
Geometrical moments of inertia of aluminium profile			
I_x mm^4	5,61x10^5	2,13x10^6	4,81 x10^6
I_y mm^4	34,19x10^5	12,33x10^6	26,0 x10^6
Elastic modulus N/mm^2	70000	70000	70000

For life-time calculation use our homepage.

** referred to life-time*

Deflection:

$$f = \frac{F * L^3}{E * I * 192}$$

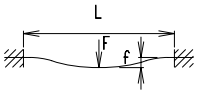

f = deflection (mm)
F = load (N)
L = free length (mm)
E = elastic modulus 70000 (N/mm^2)
I = second moment of area (mm^4)

Linear system **DSR 120, 160, 200**

Dimensions (mm)

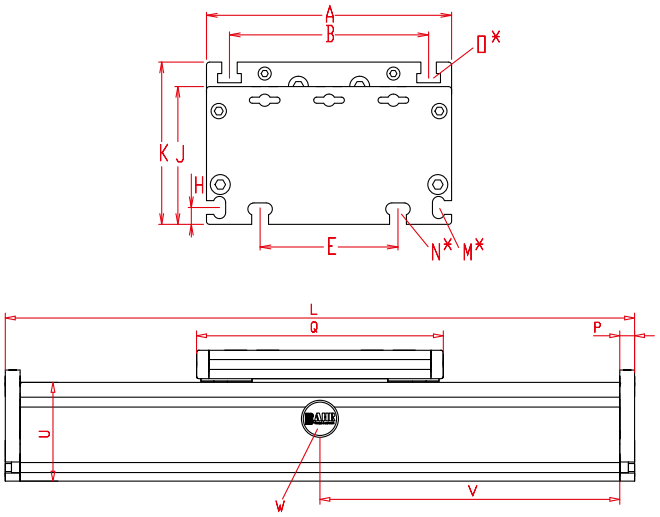

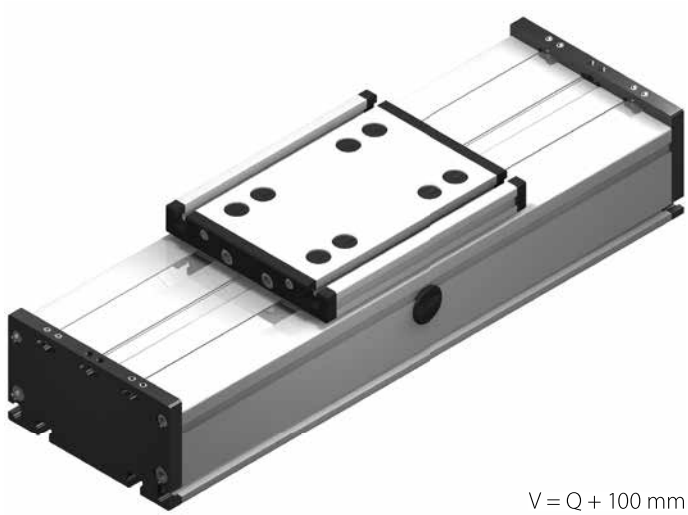

V = Q + 100 mm
W = servicing position

*For slide nuts refer to chapter 2.2 page 2

Increasing the carriage length will increase the basic length by the same amount.

Size	Basic length L	A	B	E	H	J	K	M for	N for	O for	P	Q	U	Basic weight	Weight per 100 mm
DSR 120	200	120	96	78	10	68	79	M 5	M 6	M 6	10	156	60	3,2 kg	0,71 kg
DSR 160	240	160	130	90	11	90	106	M 6	M 8	M 8	12	200	80	7,0 kg	1,5 kg
DSR 200	320	200	160	140	15	110	129	M 8	M 10	M 10	15	270	100	15,0 kg	2,9 kg

0 **Choice of guide body profile:** Stainless versions upon request.

(0)

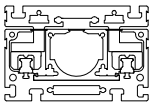

internal profile
with cover bands

(1)

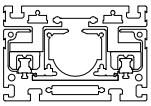

internal profile
without cover bands

(2)

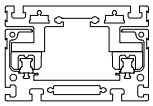

without internal profile
and cover bands

0 **Choice of carriages:**

(0)

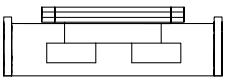

(1)

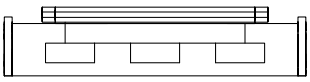

Size	Version 0		Version 1	
	Q	L	Q	L
120	156	200	156	200
160	200	240	>230	>270
200	270	320	>310	>360

DSR	160	0	0	0	0	0	0	0	1500
	Pos.	1	2	3	4	5	6	7	

Basic length + stroke = total length

Sample ordering code:
DSR160, with internal profile and cover bands, standard runner blocks, 1260 mm stroke.

Linear system **DSZS 120, 160, 200**

BELT DRIVE

INDEPENDENT INSTALLATION POSITION
OMEGA SYSTEM
LIFTING SYSTEM

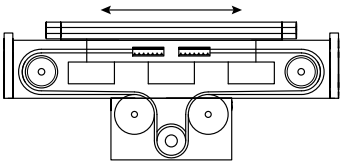

Function:
This unit consists of a rectangular aluminium profile with 2 integrated rail guidess. The carriage is moved by a belt drive. An innovation is that the toothed belt is diverted within a drive block positioned centrically. The result is an enormous compactness with regard to the overall system length. The toothed drive pulley has a coupling claw in the standard version. Belt tension can be readjusted by a simple screw adjustment device in the carriage. This device can also be used for symmetrical adjustment of two or more linear units running parallel. The openings of the guide body are sealed with 3 stainless steel cover bands to protect the guide from splash water and dust. Alternatively, the opening can also delivered without cover bands.

Fitting position: As required. Max. length 6.000 mm without joints.
Carriage mounting: By T-slots.
Unit mounting: By T-slots and mounting sets. The linear axis can be combined with any T-slot profile.
Belt type: HTD with steel reinforcement, no backlash when changing direction, repeatability ± 0,1 mm.
Carriage support: In the standard version, the carriage runs on 4 runner blocks which can be serviced at a central servicing position. For longer carriages the number of runner blocks can be increased.

9.1

Forces and torques

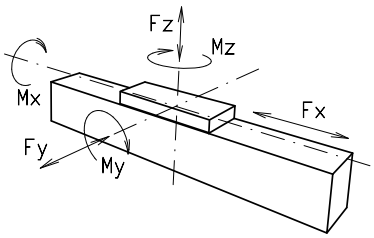

Size	160		200	
permitted dyn. Forces*	5000 km	10000 km	5000 km	10000 km
F_x (N)	1900	1800	4000	3800
F_y (N)	5570	3900	15600	11080
F_z (N)	7050	5020	20600	14600
M_x (Nm)	358	255	1285	915
M_y (Nm)	369	262	1375	980
M_z (Nm)	364	258	1345	960
All forces and torques related to the following: existing values / table values $\frac{Fy}{Fy_{dyn}} + \frac{Fz}{Fz_{dyn}} + \frac{Mx}{Mx_{dyn}} + \frac{My}{My_{dyn}} + \frac{Mz}{Mz_{dyn}} \leq 1$				
No-load torque				
Nm without cover bands	1,5		2,0	
Nm with cover bands	2,1		4	
Speed				
(m/s) max	5		5	
Tensile force				
permanent (N)	1900		4000	
0,2 s (N)	2090		4300	
Geometrical moments of inertia of aluminium profile				
I_x mm^4	21,32x10^5		4,81 x10^6	
I_y mm^4	123,36x10^5		26,0 x10^6	
Elastic modulus N/mm^2	70000		70000	

For life-time calculation use our homepage.

** referred to life-time*

Driving torque:

$$M_a = \frac{F*P*S_i}{2000*\pi} + M_n$$

$$P_a = \frac{M_a*n}{9550}$$

F = force (N)
P = pulley action perimeter (mm)
Si = safety factor 1,2 … 2
M_n = no-load torque (Nm)
n = rpm pulley (min^{-1})
M_a = driving torque (Nm)
P_a = motor power (KW)

Deflection:

$$f = \frac{F*L^3}{E*I*192}$$

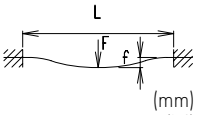

f = deflection (mm)
F = load (N)
L = free length (mm)
E = elastic modulus 70000 (N/mm^2)
I = second moment of area (mm^4)

Linear system **DSZS 120, 160, 200**

Dimensions (mm)

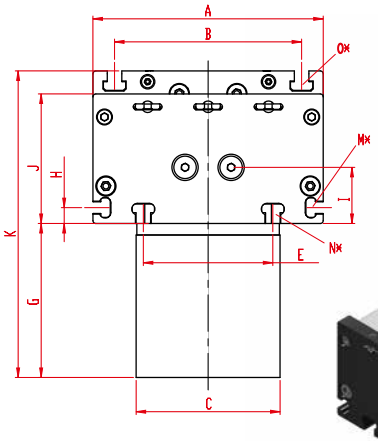

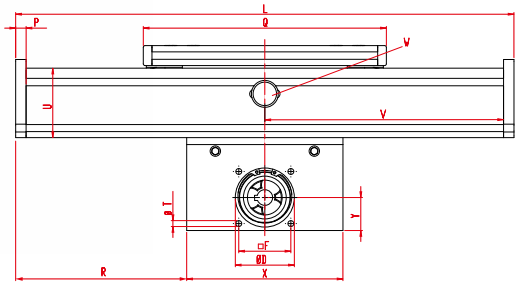

V = Q + 100 mm
W = servicing position

*For slide nuts refer to chapter 2.2 page 2

Increasing the carriage length will increase the basic length by the same amount.

Size	Basic length	A	B	C	D -0,05	E	F	G	H	I	J	K	M for	N for	O for	P	Q	R	T	U	X	Y	Basic weight	Weight per 100 mm
DSZS 120	210	120	96	80	47	78	42	84,5	10	28,7	68	167	M5	M6	M6	10	156	40	M6	60	130	30	6,2 kg	0,9 kg
DSZS 160	310	160	130	100	68	90	60	107	11	39	90	213	M6	M8	M8	12	280	65	M8	80	180	39	23,0 kg	1,9 kg
DSZS 200	380	200	160	130	90	140	80	146	15	48,5	110	275	M8	M10	M10	15	340	60	M10	100	270	60	33,0 kg	2,4 kg

0 **Choice of guide body profile:** Stainless versions upon request.

(0)

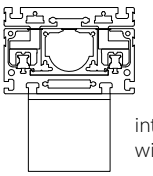

internal profile
with cover bands

(1)

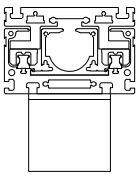

internal profile
without cover bands

0 **Choice of carriages:**

(0)

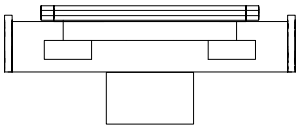

(1)

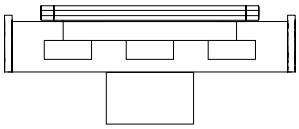

Size	Version 0		Version 1	
	Q	L	Q	L
120	156	210	156	210
160	280	310	280	310
200	340	380	380	420

0 **Drive version:**

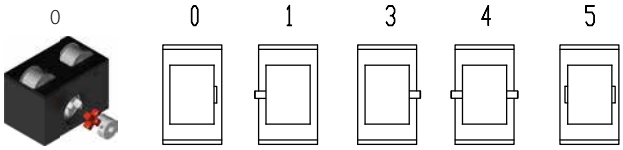

5 is as 0, but with coupling claws on both sides.
The standard version is supplied without shaft. A shaft can be retrofitted by inserting it into the pulley bore and securing it with 2 locking rings or tension sets (size 200).

Belt table:

Code No.		Size	Belt	mm/rev.	Number of teeth
0	**4**	**120**	5M 25	130	26
0	**7**	**160**	8M 30	192	24
0	**9**	**200**	8M 50	256	32

Shaft dimensions / Coupling claw:

Size	Shaft ø h6 x length	Key	Coupling
120	14 x 35	5x5x28	14
160	18 x 45	6x6x40	19
200	22 x 45	6x6x40	24

DSZS	160	1	0	0	0	0	7	1	1500
	Pos.	1	2	3	4	5	6	7	

Basic length + stroke = total length

Sample ordering code:
DSZS160 with internal profile and cover bands, standard carriage, coupling claw on one side, 1190 mm stroke.

BAHR Modultechnik
EDELSTAHL Rost frei
TÜV NORD
AEO

Linear system **DSZS 120 P, 160 P, 200 P**

BELT DRIVE

- INDEPENDENT INSTALLATION POSITION
- OMEGA SYSTEM
- LIFTING SYSTEM
- COVER PROFILE

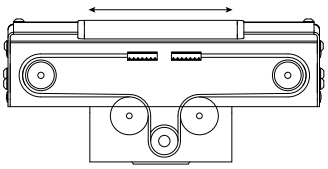

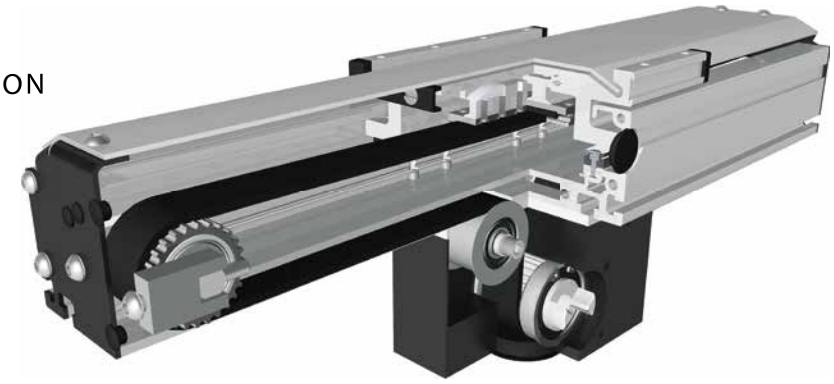

Function:
The guide body consists of a rectangular aluminium profile with two integrated rail guides. The carriage, which is running on four runner blocks, is driven by a revolving timing belt. The novelty is that the timing belt is diverted into a drive block positioned centrically. This results in an extraordinary compactness with regard to the overall length of the system. The driving toothed pulley is provided with a coupling claw as a standard. The belt tension can be easily readjusted via a tensioning device within the bearing block. The openings in the guide body are closed by an aluminium profile, leaving only small slits open on the sides. The cover profile can be adjusted according to the mounting position.
The advantages compared to the DSZS positioning system are: The number of components prone to wear such as cover bands and sliding blocks is reduced and the fact that there is no friction makes it possible to use smaller motors. In addition, the cover profile, which is fixed with only a few screws, improves the serviceability and maintainability.

Fitting position: As required. Max. length **DSZS 120P** / 1600mm, **DSZS 160P** / 1800mm, **DSZS 200P** / 2000mm
Carriage mounting: By tapped holes.
Unit mounting: By T-slots and mounting sets. The linear axis can be combined with any T-slot profile.
Belt type: HTD with steel reinforcement, no backlash when changing direction, repeatability ± 0,1 mm.
Carriage support: In the standard version, the carriage runs on 4 runner blocks which can be serviced at a central servicing position. For longer carriages the number of runner blocks can be increased.

9.1

Forces and torques

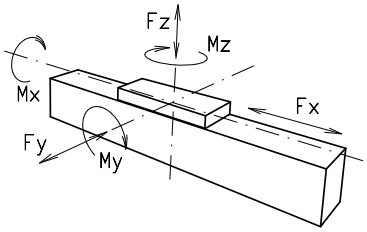

Size	120		160		200	
permitted dyn. Forces*	5000 km	10000 km	5000 km	10000 km	5000 km	10000 km
F_x (N)	894	800	1900	1800	4000	3800
F_y (N)	1776	1405	5570	3900	15600	11080
F_z (N)	2090	1650	7050	5020	20600	14600
M_x (Nm)	81	64	358	255	1285	915
M_y (Nm)	97	77	369	262	1375	980
M_z (Nm)	96	76	364	258	1345	960

All forces and torques related to the following:

existing values / table values

$$\frac{Fy}{Fy_{dyn}} + \frac{Fz}{Fz_{dyn}} + \frac{Mx}{Mx_{dyn}} + \frac{My}{My_{dyn}} + \frac{Mz}{Mz_{dyn}} \leq 1$$

No-load torque		
Nm without cover bands	1,2	1,5	2,0
Speed			
(m/s) max	5	5	5
Geometrical moments of inertia of aluminium profile			
I_x mm^4	5,61 x 10^5	21,32 x 10^5	48,07 x 10^5
I_y mm^4	34,19 x 10^5	123,36 x 10^5	259,99 x 10^5
Elastic modulus N/mm^2	70.000	70.000	70.000

For life-time calculation use our homepage.

** referred to life-time*

Driving torque:

$$M_a = \frac{F*P*S_i}{2000*\pi} + M_n$$

$$P_a = \frac{M_a*n}{9550}$$

F = force (N)
P = pulley action perimeter (mm)
Si = safety factor 1,2 … 2
M_n = no-load torque (Nm)
n = rpm pulley (min^{-1})
M_a = driving torque (Nm)
P_a = motor power (KW)

Deflection:

$$f = \frac{F*L^3}{E*I*192}$$

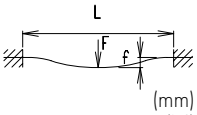

f = deflection (mm)
F = load (N)
L = free length (mm)
E = elastic modulus 70000 (N/mm^2)
I = second moment of area (mm^4)

Linear system **DSZS 120 P, 160 P, 200 P**

Dimensions (mm)

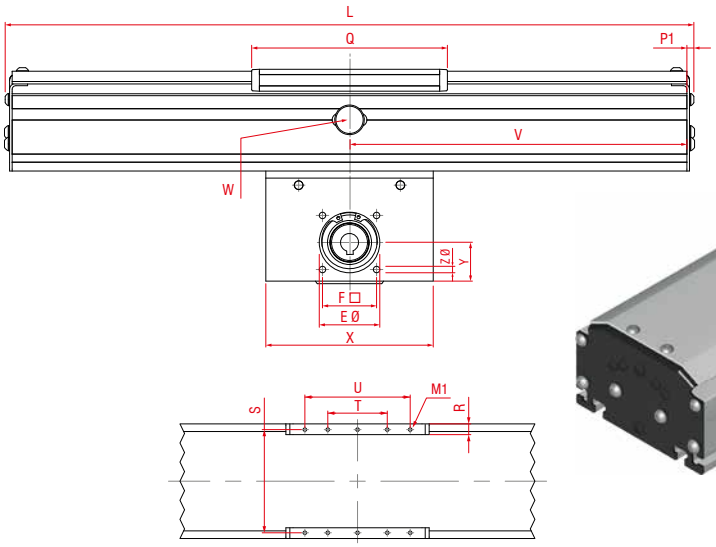

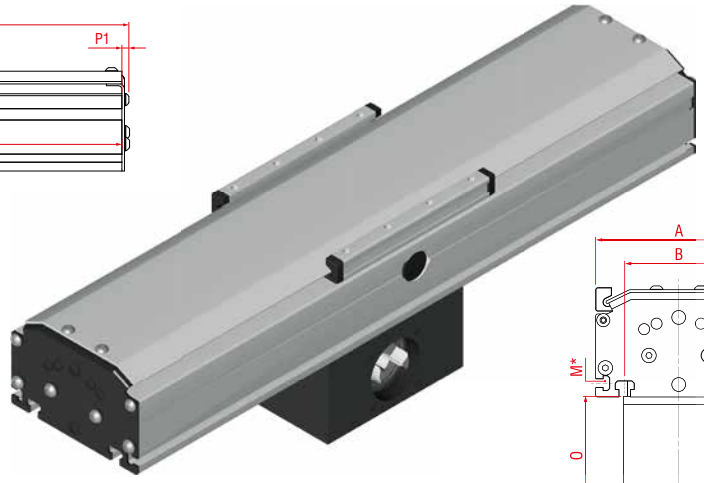

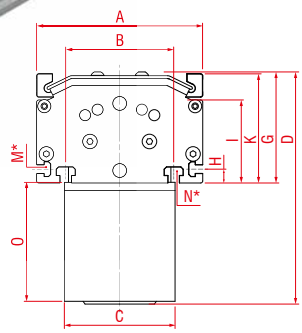

*For slide nuts refer to chapter 2.2 page 2

Increasing the carriage length will increase the basic length by the same amount.

Size	A	B	C	D	E Ø	F □	G	H	I	K	M for	N for	O	P1	P2	R	S	T	U	X	Y	Z	Basic weight	Weight per 100 mm
DSZS 120 **P**	120	78	80	169	47	42	80,5	10	60	79	M5	M6	85,5	6	32	11,5	106	40	120	130	30	M6	5,4 kg	0,87 kg
DSZS 160 **P**	160	90	100	219	68	60	108,5	11	80	106	M6	M8	107	8,25	51,5	15	144	80	160	180	38	M8	13,7 kg	1,55 kg
DSZS 200 **P**	200	140	130	281	90	80	132,5	15	100	129	M8	M10	146	10	33,5	17	180	100	200	270	60	M10	28,7 kg	2,14 kg

0 **Choice of guide body profile:** Stainless versions upon request.

V = Q + 100 mm W = servicing position

DS 120 M1 = M6 x 8
only 8 threaded holes in the carriage

DS 160 M1 = M8 x 12 **DS 200** M1 = M10 x 12

(0)

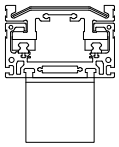

with cover profile

(1)

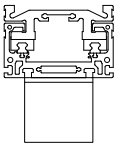

without cover profile

0 **Choice of carriages:**

(0)

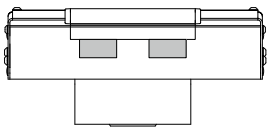

(1)

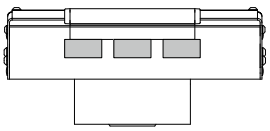

Size	Version 0		Version 1	
	Q	L	Q	L
120	152	192	152	192
160	196	283	228	315
200	248	338	296	386

0 **Drive version:**

0

0 1 3 4 5

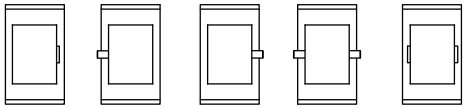

5 is as 0, but with coupling claws on both sides.
The standard version is supplied without shaft. A shaft can be retrofitted by inserting it into the pulley bore and securing it with 2 locking rings or tension sets (size 200).

Belt table:

Code No.		Size	Belt	mm/rev.	Number of teeth
0	4	**120**	5M 25	130	26
0	7	**160**	8M 30	192	24
0	9	**200**	8M 50	256	32

Shaft dimensions / Coupling claw:

Size	Shaft ø h6 x length	Key	Coupling
120	14 x 35	5 x 5 x 28	14
160	18 x 45	6 x 6 x 40	19
200	22 x 45	6 x 6 x 40	24

DSZS	120 P	1	0	0	0	0	4	1	1500
	Pos.	1	2	3	4	5	6	7	

Basic length + stroke = total length

Sample ordering code:
DSZS120 P with cover profile, standard carriage, coupling claw on one side, 1308 mm stroke.

Linear system **DSZU 120, 160, 200**

SURFACE PORTAL - STABLE DESIGN - RAIL GUIDE

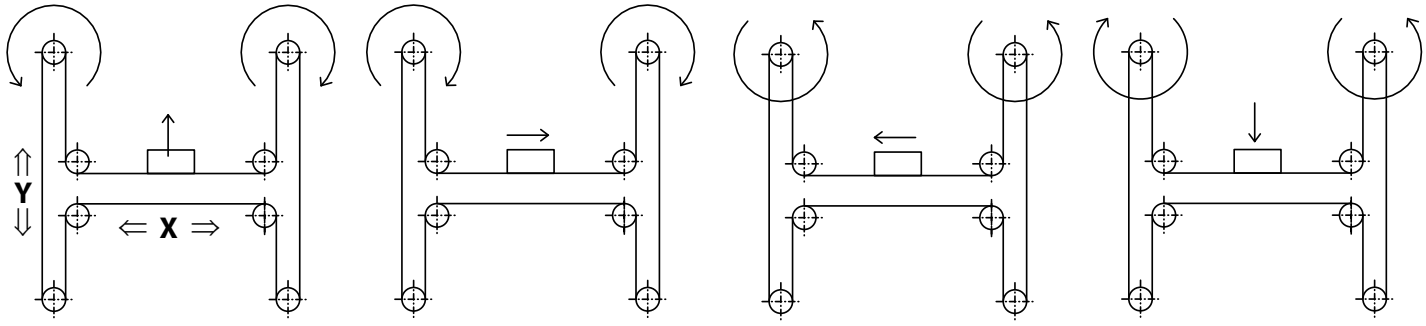

Function:
Surface portal with an integrated rail guide, which consists of two Y-axes and one X-axis. Due to the stable rectangular profile, high torques and loads can be absorbed; in addition, very high stability and low deflection are ensured for long axis systems. The drive is provided by a revolving belt, which remains connected by various deflection points. The adjustment is made by two motors. The coordinate is diagonal to the deflection points of the X-axis. Advantage: Only small weights are moved and thus high accelerations are achieved. Very compact design. Can be easily positioned and used with our matching mounting sets in the accessories section.

Fitting position: As required. Max. length and width 3.000 mm.
Carriage mounting: By T-slots
Unit mounting: By T-slots or mounting sets.
Belt type: HTD with steel reinforcement, no backlash when changing direction, repeatability: ± 0,1 mm.

9.1

Forces/Torques

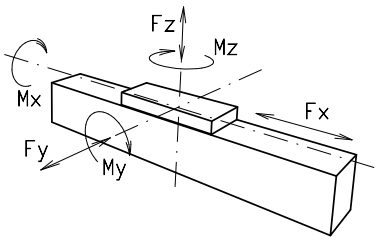

Size	120		160		200	
permitted dyn. Forces*	5000 km	10000 km	5000 km	10000 km	5000 km	10000 km
F_x (N)	894	800	1900	1800	4000	3800
F_y (N)	1776	1405	5570	3900	15600	11080
F_z (N)	2090	1650	7050	5020	20600	14600
M_x (Nm)	81	64	358	255	1285	915
M_y (Nm)	97	77	369	262	1375	980
M_z (Nm)	96	76	364	258	1345	960
All forces and torques relate to the following: existing values / table values $\frac{Fy}{Fy_{dyn}} + \frac{Fz}{Fz_{dyn}} + \frac{Mx}{Mx_{dyn}} + \frac{My}{My_{dyn}} + \frac{Mz}{Mz_{dyn}} \leq 1$						
No-load torqe						
Nm without cover bands	1,2		1,5		2	
Speed						
(m/s) max	5		5		5	
Tensile force						
permanent (N)	900		1900		4000	
0,2 s (N)	1000		2090		4300	
Geometrical moments of inertia of aluminium profile						
I_x mm^4	5,61x10^5		21,32x10^5		48,07x10^5	
I_y mm^4	34,19x10^5		123,36x10^5		259,99x10^5	
E-Modulus N/mm^2	70000		70000		70000	

For life-time calculation use our homepage.

** referred to life-time*

Driving torque:

$$M_a = \frac{F*P*S_i}{2000*\pi} + M_n$$

$$P_a = \frac{M_a*n}{9550}$$

F	= force	(N)
P	= pulley action perimeter	(mm)
Si	= safety factor 1,2 … 2	
M_n	= no-load torque	(Nm)
n	= rpm pulley	(min^{-1})
M_a	= driving torque	(Nm)
P_a	= motor power	(KW)

Deflection:

$$f = \frac{F*L^3}{E*I*192}$$

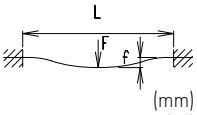

f	= deflection	(mm)
F	= load	(N)
L	= free length	(mm)
E	= elastic modulus 70000	(N/mm^2)
I	= second moment of area	(mm^4)

Linear system **DSZU 120, 160, 200**

Dimensions (mm)

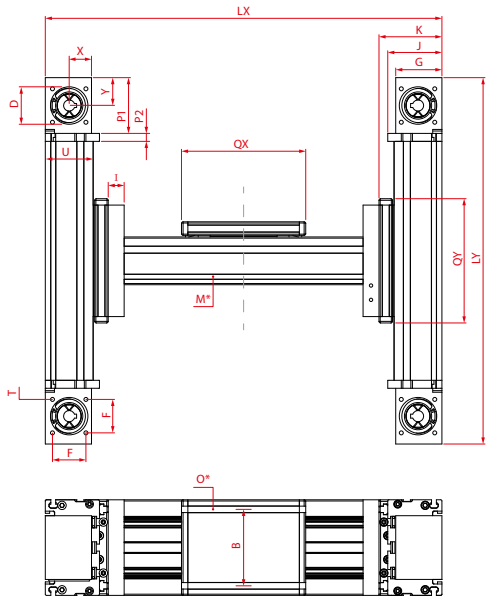

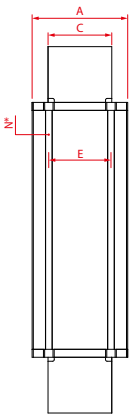

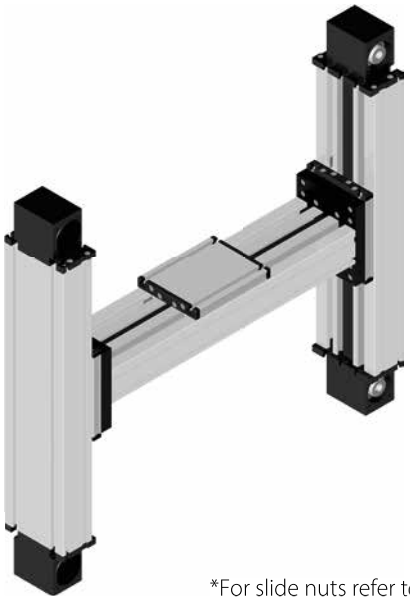

*For slide nuts refer to chapter 2.2 page 2

Size	Basic length Lx	Basic length Ly	A	B	C	D - 0,05	E	F	G	I	J	K	M for	N for	O for	P1	P2	Qx	Qy	T	U	X	Y	Basic weight	Weight per 100 mm
DSZU 120	354	316	120	96	80	47	78	42	58	20	68	79	M5	M6	M6	70	10	156	156	M6	60	28	35	14,42 kg	0,85 kg
DSZU 160	462	414	160	130	100	68	90	60	78	25	90	106	M6	M8	M8	95	12	200	200	M8	80	39	45	34,23 kg	1,69 kg
DSZU 200	648	540	200	160	130	90	140	80	97	50	110	129	M8	M10	M10	110	15	270	290	M10	100	49	50	74,11 kg	2,33 kg

0 **Choice of guide body profile:** Stainless versions upon request.

(1)

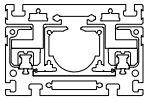

internal profile
without cover bands

(2)

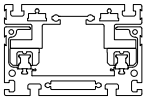

without internal profile
and cover bands

0 **Choice of carriages:**

(0)

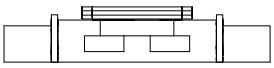

(1)

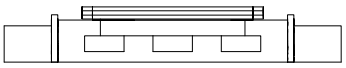

Size	Version 0 Qx	Version 0 Lx	Version 0 Qy	Version 0 Ly	Version 1 Qx	Version 1 Lx	Version 1 Qy	Version 1 Ly
120	156	354	156	316	156	354	156	316
160	200	462	200	414	230	492	230	444
200	270	648	290	540	310	668	310	560

0 **Drive version:**

(0)

(1)

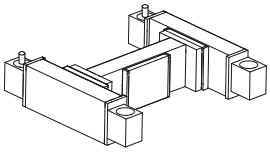

(2)

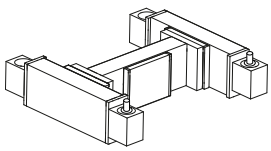

The standard version is supplied without shaft. A shaft can be retrofitted by inserting it into the pulley bore and securing it with 2 locking rings.

Belt table:

Code No.		Size	Belt	mm/rev.	Number of teeth
0	4	**120**	5M25	130	26
0	7	**160**	8M30	176	22
0	9	**200**	8M50	224	28

Shaft dimensions / Coupling claw:

Size	Shaft ø h6 x length	Key	Coupling
120 (5M25)	14 x 35	5x5x28	14
160 (8M30)	18 x 45	6x6x40	19
200 (8M50)	22 x 45	6x6x40	24

DLZU	120	7	0	0	0	0	4	1	1500

X-Axis Basic length + stroke = total length

Y-Axes Basic length + stroke = total length

DLZU	120	8	0	0	0	0	4	1	700
	Pos.	1	2	3	4	5	6	7	

For combination kits and connecting elements refer to chapter 2.2

Sample ordering code:
DLZU 120, with standard body profile, standard carriage, coupling claw on one side, stroke X = 1074 / Y = 370 mm

Possible mounting styles

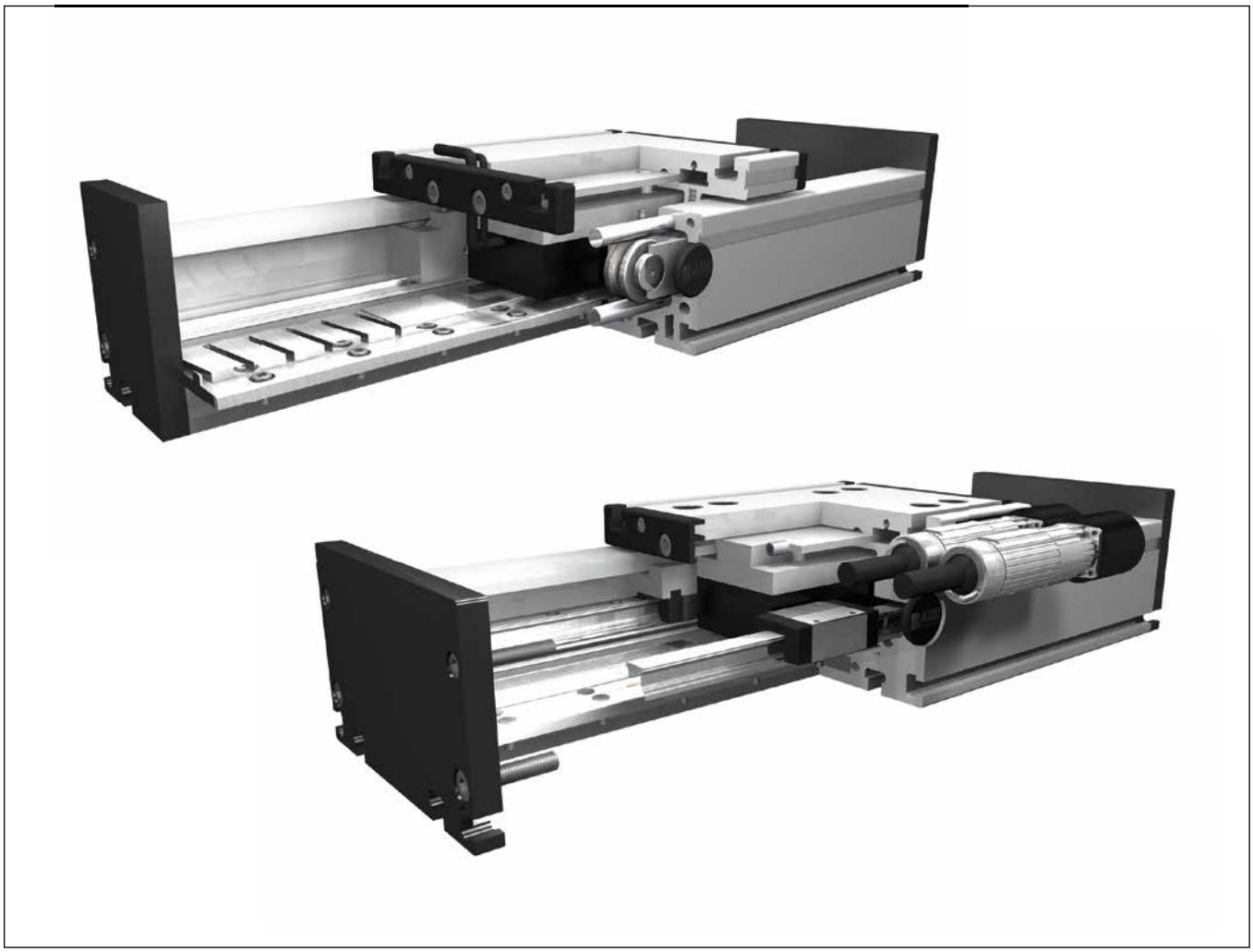

DL

Roller guide and linear motor drive

DS

Rail guide and linear motor drive

Linear system **DLM 120, 160, 200**

LINEAR MOTOR DRIVE

- ROLLER GUIDE
- HIGH DYNAMICS
- HIGH REPEAT ACCURACY
- LONG TRAVERSE PATH
- INDEPENDENT CARRIAGES

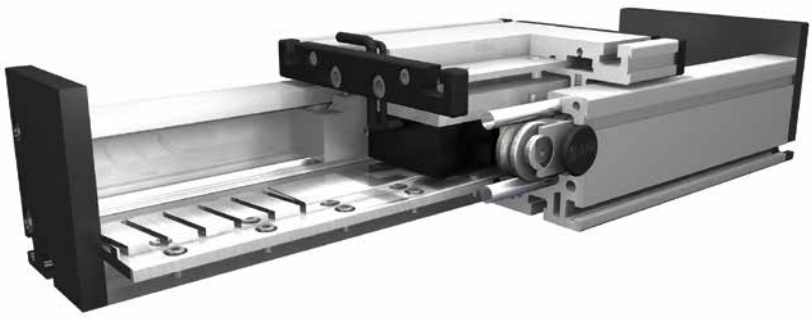

Function:
This unit consists of a rectangular aluminium profile with 2 integrated roller guides. The linear motor DLM unit is based on the principle of a linear, synchronous AC motor. The guiding profile is fitted with permanent magnets as stator (secondary part). The carriage is fitted with the actuator (primary part). The magnetic attraction causes a force between carriage and guiding profile also in the absence of current. This force can be used for the initial tension of the bearings. Several carriages (primary parts) can be driven independently on one guiding profile.

Fitting position: As required. Max. length 6.000 mm without joints.
Carriage mounting: By T-slots.
Unit mounting: By T-slots and mounting sets. The linear axis can be combined with any T-slot profile.
Carriage support: In the standard version, the carriage runs on 10 or 12 rollers which can be adjusted and serviced at a central servicing position. For longer carriages the number of rollers can be increased.
Repeatability ± 0,05 mm. Repeated accuracy max. ± 0,05 bis 4.000 mm, ± 0,1 >4.000 mm.

Forces and torques

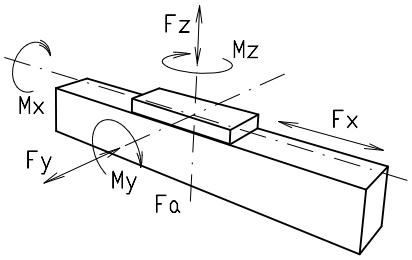

F_z = external force by load
F_a = magnetic attraction force
F_{zm} = maximum force in consideration of motor power
$F_{zm} = F_z + F_a$

Size	120			160			200		
Motor size	1	2	3	1	2	3	1	2	3
Forces/Torques $_{dyn}$									
F_a (N)	600	1200	1800	1200	1800	5500	3600	5500	11000
F_{zm} (N)	820	1640	2460	1590	8800	7030	5000	7500	13800
F_y (N)	700	700	470	1500	1000	450	3300	2200	1200
M_x (Nm)	180	90	60	280	190	130	600	400	220
M_y (Nm)	50	100	70	320	210	140	640	420	230
M_z (Nm)	22	33	50	90	100	120	200	170	210
Number of rollers	10	12	12	12	12	12	12	12	12
All forces and torques related to the following: existing values / table values	$\frac{Fy}{Fy_{dyn}} + \frac{Fzm}{Fzm_{dyn}} + \frac{Mx}{Mx_{dyn}} + \frac{My}{My_{dyn}} + \frac{Mz}{Mz_{dyn}} \leq 1{,}5$								
Motor specifications Fx									
Motor size	1	2	3	1	2	3	1	2	3
Carriage weight (kg)	1,7	2,5	3,1	5,1	4,7	5,4	9,4	10,5	12,7
Weight primary part (kg)	0,7	1,4	2,0	1,4	3,7	5,2	4,5	6,4	8,4
permanent (N)	61	115	173	115	271	406	383	574	766
Max. (N) (1s)	162	323	485	323	607	911	868	1301	1735
Moving force without current									
N	3	5	6	5	8	9	7	11	12
Speed									
(m/s) max	4			6			6		
Geometrical moments of inertia of aluminium profile									
I_x mm^4	$6{,}6 \times 10^5$			$22{,}2 \times 10^5$			$63{,}8 \times 10^5$		
I_y mm^4	$38{,}6 \times 10^5$			$122{,}0 \times 10^5$			$335{,}0 \times 10^5$		
Elastic modulus N/mm^2	70000			70000			70000		

For life-time calculation use our homepage.

Deflection:

$$f = \frac{F * L^3}{E * I * 192}$$

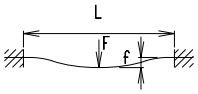

f = deflection (mm)
F = load (N)
L = free length (mm)
E = elastic modulus 70000 (N/mm^2)
I = second moment of area (mm^4)

Linear system **DLM 120, 160, 200**

Dimensions (mm)

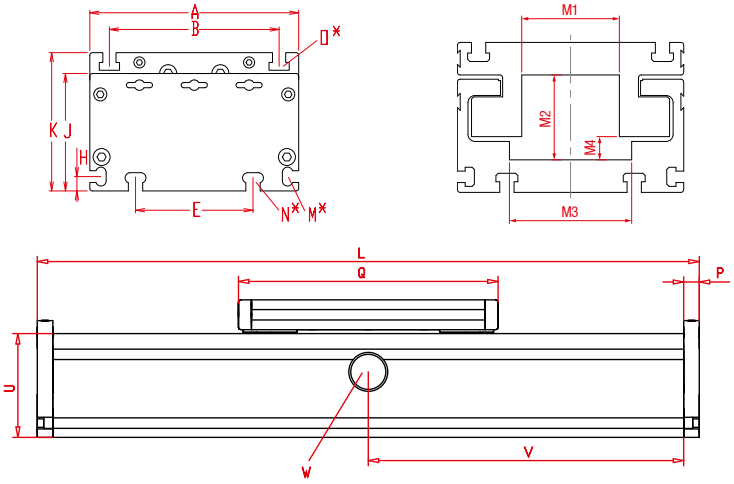

V = Q + 100 mm
W = servicing position

*For slide nuts refer to chapter 2.2 page 2

Increasing the carriage length will increase the basic length by the same amount.

Size	Basic length L	A	B	E	H	J	K	M for	N for	O for	P	U	Basic weight Motor size 1/2/3	Weight per 100 mm Motor size 1/2/3
DLM 120	Q + 30	120	96	78	10	68	79	M 5	M 6	M 6	10	60	5,2/7,2/9,2 Kg	1,0/1,0/1,0 Kg
DLM 160	Q + 30	160	130	90	11	90	106	M 6	M 8	M 8	12	80	12,6/15,6/20,7 Kg	1,6/2,0/2,0 Kg
DLM 200	Q + 35	200	160	140	15	110	129	M 8	M 10	M 10	15	100	26,9/30,5/37,9 Kg	2,6/2,6/2,6 Kg

0 **Choice of guide body profile:**: Stainless versions upon request.

(0)

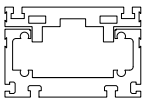

without internal profile and cover bands

(3)

with bellows

Size	M1	M2	M3	M4
DL 120	52	45	64	12
DL 160	70	60	85	18
DL 200	85	77	100	15

Helper table for provided motors

1 **Measurement system:**
(1) Measurement system LE100 5V
(2) Measurement system LE100 10,5-30V Resolution 0.05
(3) Hall sensor Resolution 0.05
(4) Measurement system provided by customer

1 **Plug:**
(1) Plug Pos. 1

(2) Plug Pos. 2

(3) open unconnected cable end

1 **Motor size:**
(1) Motor size 1 with Q1
(2) Motor size 2 with Q2
(3) Motor size 3 with Q3
(4) Supply with Q1*
(5) Supply with Q2*
(6) Supply with Q3*
* = provided by customer

Dimensioning criteria for motor output						
	l_p ❒	b_p ❒	h_{ps} ❒	Q_1	Q_2	Q_3
120	**Q - 70**	**55**	**38**	**196**	**276**	**372**
160	**Q - 70**	**71**	**50**	**316**	**360**	**461**
200	**Q - 70**	**85**	**62**	**410**	**444**	**610**

l_p = length primary part; b_p = width primary part;
h_{ps} = height primary part + height secondary part + interspaces primary-/secondary part

For standard carriage length see 'Q' in table.
For linear encoder refer to chapter 9.1.

DLM	160	0	0	1	1	0	0	1	1500
	Pos.	1	2	3	4	5	6	7	

Basic length + stroke = total length

Sample ordering code:
DLM160, Bahr Modultechnik Linearmotor, standard body profile, Measurement system LE100 5V, Plug Pos. 1, motor size 1, 1154 mm stroke.

Linear system **DSM 120, 160, 200**

LINEAR MOTOR DRIVE

- RAIL GUIDE
- HIGH DYNAMICS
- HIGH REPEAT ACCURACY
- LONG TRAVERSE PATH
- INDEPENDENT CARRIAGES

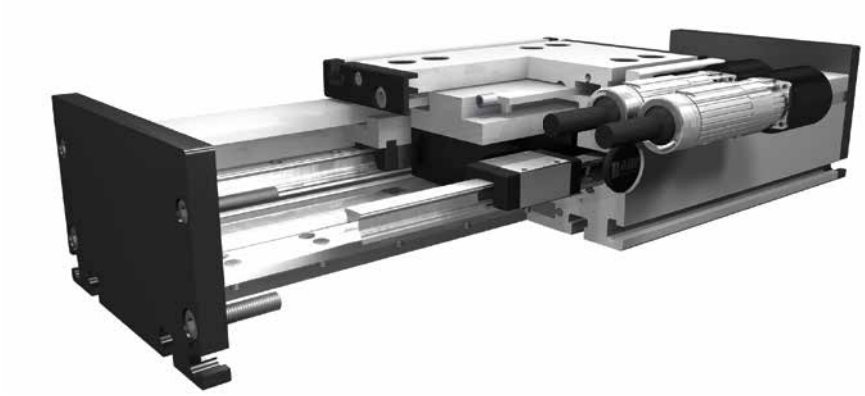

Function:
This unit consists of a rectangular aluminium profile with 2 integrated rail guidance. The linear motor DSM unit is based on the principle of a linear, synchronous AC motor. The guiding profile is fitted with permanent magnets as stator (secondary part). The carriage is fitted with the actuator (primary part). The magnetic attraction causes a force between carriage and guiding profile also in the absence of current. This force can be used for the initial tension of the bearings. Several carriages (primary parts) can be driven independently on one guiding profile.

Fitting position: As required. Max. length 6.000 mm without joints.
Carriage mounting: By T-slots.
Unit mounting: By T-slots and mounting sets. The linear axis can be combined with any T-slot profile.
Carriage support: In the standard version, the carriage runs on 4 runner blocks which can be serviced at a central servicing position. For longer carriages the number of runner blocks can be increased.
Repeatability ± 0,05mm mm. Repeated accuracy max. ± 0,05mm bis 4.000 mm, ± 0,1 >4.000 mm.

Forces and torques

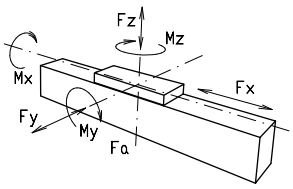

F_z = external force by load
F_a = magnetic attraction force
F_{zm} = maximum force in consideration of motor power
$F_{zm} = F_z + F_a$

Size	120		160			200		
Motor size	1	2	1	2	3	1	2	3
permitted dyn.Forces*	10000 km		10000 km			10000 km		
F_a (N)	600	1200	1200	1800	5500	3600	5500	11000
F_{zm} (N)	820	1640	1590	2800	7030	4990	7640	13860
F_z (N)	650	500	1775	1775	3550	4092	4092	8184
M_x (Nm)	35	32	160	128	153	357	231	462
M_y (Nm)	40	58	373	351	532	769	556	1540
M_z (Nm)	40	57	222	261	328	585	654	906
Number of runner blocks	6	8	4	4	8	4	4	8

All forces and torques related to the following:
existing values / table values

$$\frac{Fy}{Fy_{dyn}} + \frac{Fzm}{Fzm_{dyn}} + \frac{Mx}{Mx_{dyn}} + \frac{My}{My_{dyn}} + \frac{Mz}{Mz_{dyn}} \leq 1{,}5$$

Motor specifications Fx								
Motor size	1	2	1	2	3	1	2	3
Carriage weight (kg)	1,4	2,7	4,8	5,3	7,1	10,9	11,4	16,9
Weight primary part (kg)	0,7	1,4	1,4	3,7	5,2	4,5	6,4	8,4
permanent (N)	61	115	115	271	406	383	574	766
Max. (N) 1s	162	323	323	607	911	868	1301	1735
Moving force without current								
N	15	15	30	30	60	40	40	80
Geometrical moments of inertia of aluminium profile								
I_x mm^4	5,60 x10^5		2,13 x10^6			4,81 x10^6		
I_y mm^4	34,19 x10^5		12,3 x10^6			26,0 x10^6		
Elastic modulus N/mm^2	70000		70000			70000		

For life-time calculation use our homepage.

** referred to life-time*

Deflection:

$$f = \frac{F * L^3}{E * I * 192}$$

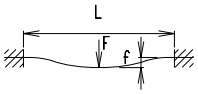

f = deflection (mm)
F = load (N)
L = free length (mm)
E = elastic modulus 70000 (N/mm^2)
I = second moment of area (mm^4)

Linear system **DSM 120, 160, 200**

Dimensions (mm)

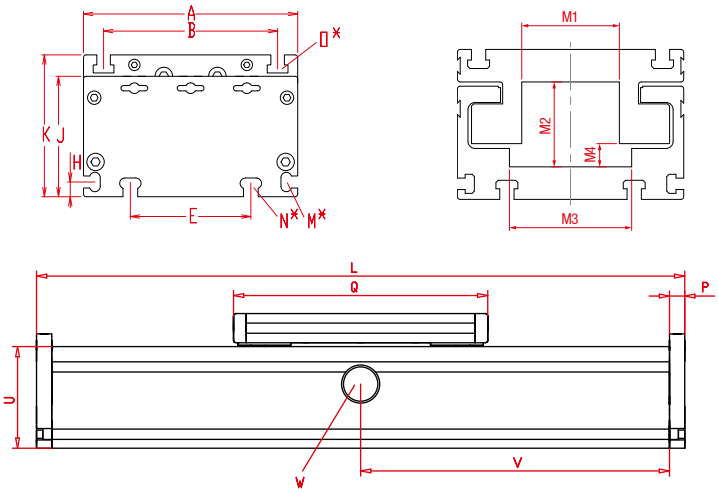

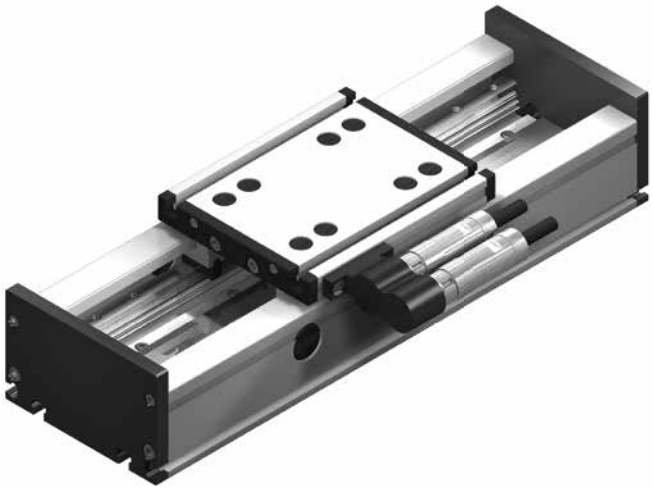

V = Q + 100 mm
W = servicing position

*For slide nuts refer to chapter 2.2 page 2

Increasing the carriage length will increase the basic length by the same amount.

Size	Basic length L	A	B	E	H	J	K	M for	N for	O for	P	U	Basic weight Motor size 1/2/3	Weight per 100 mm Motor size 1/2/3
DSM 120	Q + 30	120	96	78	10	68	79	M 5	M 6	M 6	10	60	4,8/6,9 kg	1,0/1,0
DSM 160	Q + 30	160	130	90	11	90	106	M 6	M 8	M 8	12	80	12,4/16,7/22,6 kg	1,7/2,0/2,0 kg
DSM 200	Q + 35	200	160	140	15	110	129	M 8	M 10	M 10	15	100	30,0 /33,0 /44,2kg	3,1/3,1/3,1 kg

0 **Choice of guide body profile:** Stainless versions upon request.

(0)

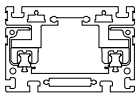

without internal profile and cover bands

(3)

with bellows

Size	M1	M2	M3	M4
DS 120	52	45	64	13
DS 160	70	60	85	17
DS 200	84	77	100	15

Helper table for provided motors

1 **Measurement system:**
(1) Measurement system LE100 5V Resolution 0.05
(2) Measurement system LE100 10,5-30V Resolution 0.05
(3) Hall sensor
(4) Measurement system provided by customer

1 **Plug:**
(1) Plug Pos. 1

(2) Plug Pos. 2

(3) open unconnected cable end

1 **Motor size:**
(1) Motor size 1 with Q_1
(2) Motor size 2 with Q_2
(3) Motor size 3 with Q_3
(4) Supply with Q_1*
(5) Supply with Q_2*
(6) Supply with Q_3*
* = provided by customer

Dimensioning criteria for motor output						
	l_p ❒	b_p ❒	h_{ps} ❒	Q_1	Q_2	Q_3
120	**Q - 70**	**55**	**38**	**196**	**276**	**-**
160	**Q - 70**	**71**	**50**	**316**	**360**	**461**
200	**Q - 70**	**85**	**62**	**410**	**444**	**610**

l_p = length primary part; b_p = width primary part;
h_{ps} = height primary part + height secondary part + interspaces primary-/secondary part

For standard carriage length see 'Q' in table.
The carriages can be delivered in any non-standard length upon request; the longer the carriage, the greater the load capacity.
For linear encoder refer to chapter 9.1.

DSM	160	0	0	1	1	0	0	1	1500
	Pos.	1	2	3	4	5	6	7	

Basic length + stroke = total length

Sample ordering code:
DSM160, Bahr Modultechnik Linear motor, standard body profile, Measurement system LE100 5V, Plug Pos. 1, motor size 1, 1154 mm stroke

Linear system **DSM 160P, 200P**

LINEAR MOTOR DRIVE

- RAIL GUIDE
- HIGH DYNAMICS
- HIGH REPEAT ACCURACY
- LONG TRAVERSE PATH
- CLEAN ROOM

Function:
This unit consists of a rectangular aluminium profile with 2 integrated rail guidance. The linear motor DSM unit is based on the principle of a linear, synchronous AC motor. The guiding profile is fitted with permanent magnets as stator (secondary part). The carriage is fitted with the actuator (primary part). The magnetic attraction causes a force between carriage and guiding profile also in the absence of current. This force can be used for the initial tension of the bearings. Several carriages (primary parts) can be driven independently on one guiding profile. A special design of the carriage geometry results in the guiding profile being covered. This prevents small parts from falling into the system, so that clean-room applications are possible.

Fitting position: As required. Max. length 3.000 mm without joints.
Carriage mounting: By threaded holes.
Unit mounting: By T-slots and mounting sets. The linear axis can be combined with any T-slot profile.
Carriage support: In the standard version, the carriage runs on 4 runner blocks which can be serviced at a central servicing position. For longer carriages the number of runner blocks can be increased.
Repeatability ± 0,05mm mm. Repeated accuracy max. ± 0,05mm up to 3.000 mm

Forces and torques

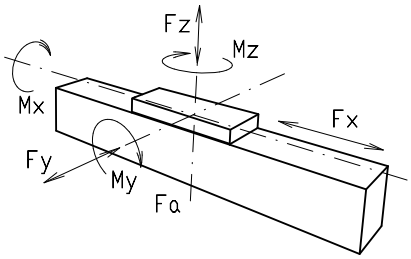

F_z = external force by load
F_a = magnetic attraction force
F_{zm} = maximum force in consideration of motor power
$F_{zm} = F_z + F_a$

Size	160			200		
Motor size	1	2	3	1	2	3
permitted dyn.Forces*	10000 km			10000 km		
F_a (N)	1200	1800	5500	3600	5500	11000
F_{zm} (N)	1590	2800	7030	4990	7640	13860
F_z (N)	1775	1775	3550	4092	4092	8184
M_x (Nm)	160	128	153	357	231	462
M_y (Nm)	373	351	532	769	556	1540
M_z (Nm)	222	261	328	585	654	906
Number of runner blocks	4	4	8	4	4	8
All forces and torques related to the following:						
existing values / table values	$\frac{Fy}{Fy_{dyn}} + \frac{Fzm}{Fzm_{dyn}} + \frac{Mx}{Mx_{dyn}} + \frac{My}{My_{dyn}} + \frac{Mz}{Mz_{dyn}} \leq 1{,}5$					
Motor specifications Fx						
Motor size	1	2	3	1	2	3
Carriage weight (kg)	4,8	5,3	7,1	10,9	11,4	16,9
Weight primary part (kg)	1,4	3,7	5,2	4,5	6,4	8,4
permanent (N)	115	271	406	383	574	766
Max. (N) 1s	323	607	911	868	1301	1735
Moving force without current						
N	30	30	60	40	40	80
Geometrical moments of inertia of aluminium profile						
I_x mm^4	2,13 x10^6			4,81 x10^6		
I_y mm^4	12,3 x10^6			26,0 x10^6		
Elastic modulus N/mm^2	70000			70000		

For life-time calculation use our homepage.

** referred to life-time*

Deflection:

$$f = \frac{F * L^3}{E * I * 192}$$

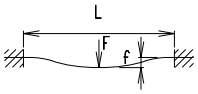

f = deflection (mm)
F = load (N)
L = free length (mm)
E = elastic modulus 70000 (N/mm²)
I = second moment of area (mm⁴)

Linear system **DSM 160P, 200P**

Dimensions (mm)

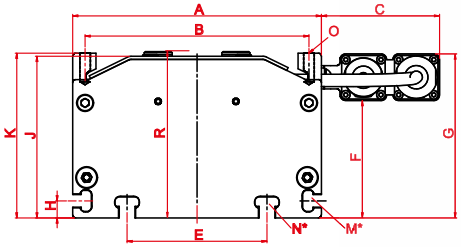

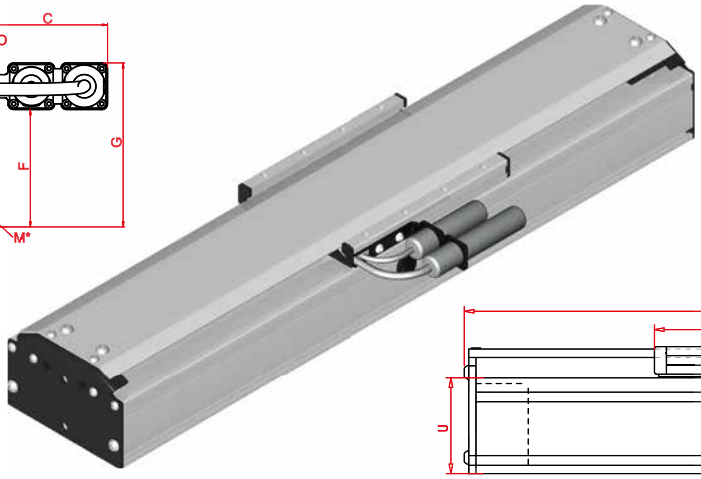

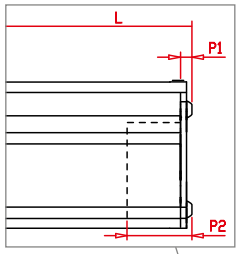

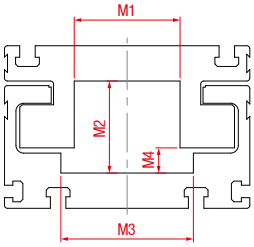

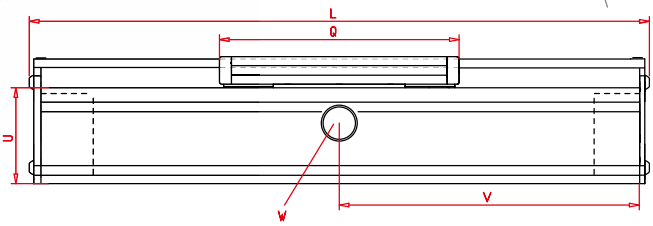

V = Q + 100 mm W = servicing position

*For slide nuts refer to chapter 2.2 page 2

Increasing the carriage length will increase the basic length by the same amount.

Size	Basic length L	A	B	C	E	F	G	H	J	K	M for	N for	O for	R	P1	P2	U	Basic weight Motor size 1/2/3	Weight per 100mm Motor size 1/2/3
DSM 160P	Q + 108	160	144	76	90	76	106	11	104	106	M 6	M 8	M 8	107	9	57	80	12,1/15/20	1,7/2,1/2,1
DSM 200P	Q + 126	200	182	76	140	96	126	15	128	129	M 8	M 10	M 10	130	10	62	100	26,1/29,6/36,8	2,8/2,8/2,8

0 **Choice of guide body profile:** Stainless versions upon request.

(0)

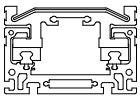

without internal profile
with cover profile

(1)

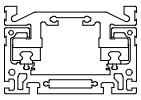

without internal profile
without cover profile

Size	M1	M2	M3	M4
DS 120	52	45	64	13
DS 160	70	60	85	17
DS 200	84	77	100	15

Helper table for provided motors

1 **Measurement system:**

(1) Measurement system LE100/1 5V Resolution 0.05
(2) Measurement system LE100/1 10,5-30V Resolution 0.05
(3) Hall sensor
(4) Measurement system provided by customer

1 **Plug:**

(1) Plug Pos. 1

(2) Plug Pos. 2

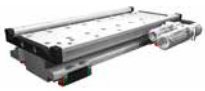

(3) open unconnected cable end

1 **Motor size:**

(1) Motor size 1 with Q_1
(2) Motor size 2 with Q_2
(3) Motor size 3 with Q_3
(4) Supply with Q_1*
(5) Supply with Q_2*
(6) Supply with Q_3*

* = provided by customer

Dimensioning criteria for motor output						
	l_p ❒	b_p ❒	h_{ps} ❒	Q_1	Q_2	Q_3
160	**Q-70**	**71**	**50**	**316**	**360**	**461**
200	**Q-70**	**85**	**62**	**410**	**444**	**610**

l_p = length primary part; b_p = width primary part;
h_{ps} = height primary part + height secondary part + interspaces primary-/secondary part

For standard carriage length see 'Q' in table.
The carriages can be delivered in any non-standard length upon request; the longer the carriage, the greater the load capacity. For linear encoder refer to chapter 9.1.

DSM	160P	0	0	1	1	0	0	1	1500
	Pos.	1	2	3	4	5	6	7	

Basic length + stroke = total length

Sample ordering code:
DSM160P, Bahr Modultechnik Linear motor, standard body profile, Measurement system LE100/1 5V, Plug Pos. 1, motor size 1, 1094mm stroke

Magnetic Sensor LE100/1 and Magnetic Band MB100

Specifications:

+ Supply voltage	10,5 - 30 VDC; 5 VDC +/- 5% optional 5 V DC +/- 5%
+ Power consumption	<25 mA @ 24VDC; <50mA @ 5VDC
+ Protection	reverse battery protection
+ Connection	flying leads
+ Material of casing	metal
+ Output signals	sinusA, B, phase-shifted by 90°
+ Output current	I out max. 5 mA per signal path
+ Signal size	approx. 1 Vss
+ Travel speed	max. 10 m/s
+ System accuracy	depending on interpolation electronics
+ Gap strip/sensor	0,1 - 0,4 mm (without cover strip)
+ Working temperature	-10....+70 °C
+ Storage temperature	-30....+80°C
+ Interference protection class	3, accord. to ICE 801
+ Test mark	CE
+ System of protection	IP 67 reading S

Magnetic Sensor LE100/1

Contactlessly measuring scanning unit with integrated analog signal output (sine 1 Vss). Together with the magnetic scale MB100 and a follower interpolation electronics unit, the LE100/1 forms an open linear measuring system.

Features:
+ Easy mounting
+ LED status display
+ Signal period 1000 µm (analog)
+ Scale MB100
+ Reference signal (option)
+ Insensitive to dust, shavings, humidity

Magnetic Band MB100

The magnetic band consists of a magnetic tape magnetized at regular distances and firmly joind with the carrier strip. For mounting a special adhesive tape is pre-mounted

Features:
+ Easy mounting by glueing
+ Insensitive to dust, shavings, humidity...
+ accuracy class 50 µm/1000 mm

Options
+ Stainless stell strip

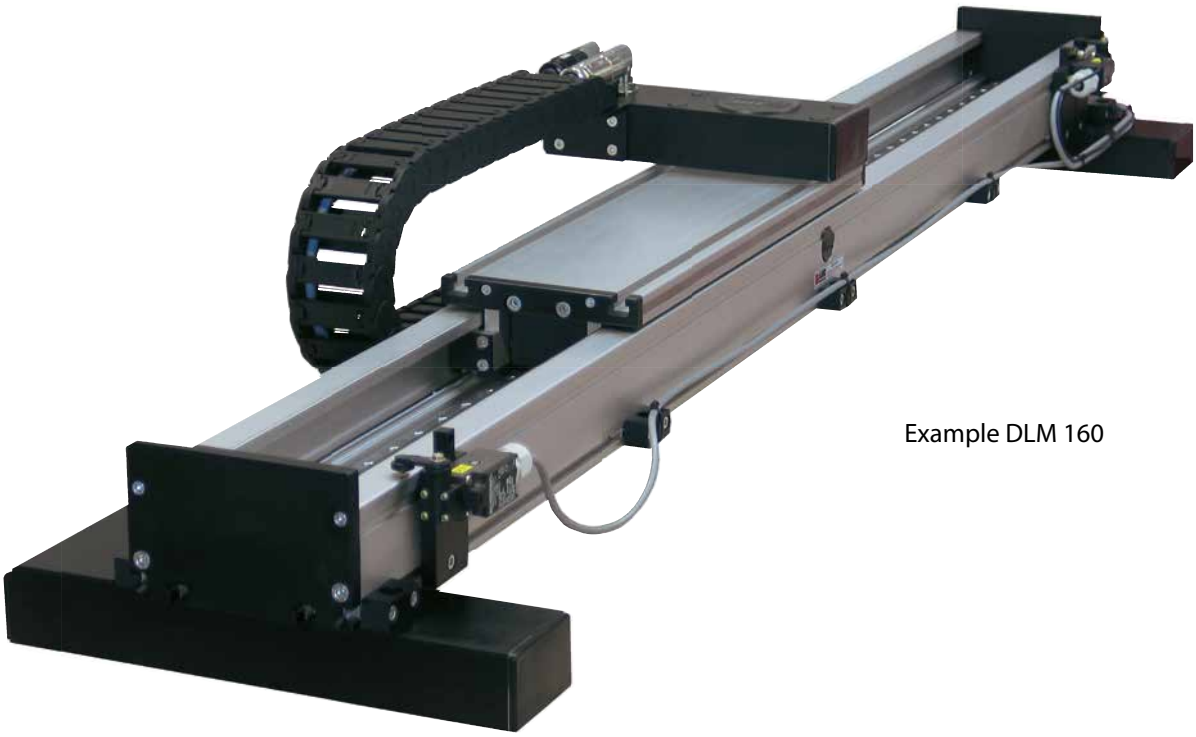

Example DLM 160

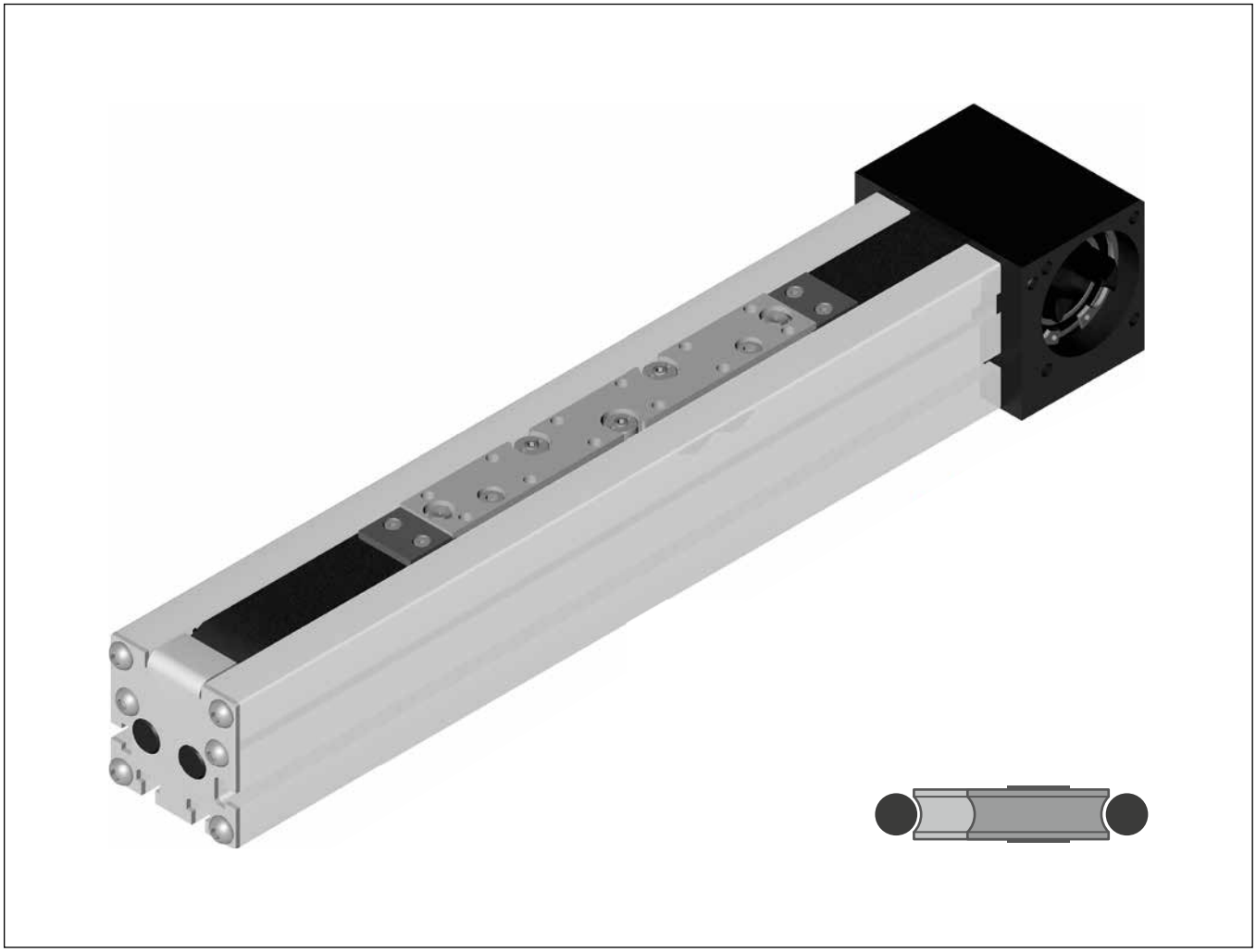

Belt driven positioning systems LL

Linear system **LLZ 40, 60, 80, 100**

BELT DRIVE

- INDEPENDENT INSTALLATION POSITION
- LONG TRAVERSE PATH >6000 MM
- INTERNAL GUIDE
- SIMPLE & SOLID

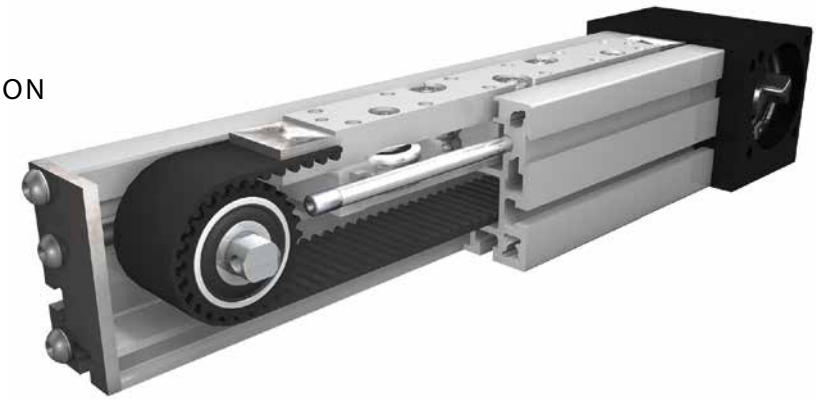

Function:
The guide body consists of an aluminium square profile, with an integrated roller guide. The carriage is moved by means of an internal rotating toothed belt. On one end there is a pulley block with coupling claws on both sides (standard version). On the opposite end there is a plate with a retensioning device for the toothed belt.

Fitting position: As required. Max. length 6.000 mm without joints.
Carriage mounting: By tapped holes.
Unit mounting: By T-slots and mounting sets. The linear axis can be combined with any T-slot profile.
Belt performance: HTD with steel reinforcement, no backlash when changing direction, repeatability ± 0,1 mm.
Carriage support: The carriage runs on 5 rollers which can be adjusted and serviced at each central servicing position. Two grease nipples at the carriage enable relubrication of the positioning system.

Forces and torques

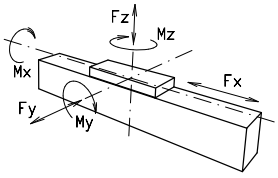

Size	40		60		80		100	
Forces/Torques	static	dynamic	static	dynamic	static	dynamic	static	dynamic
F_x (N)	800	250	1073	960	1900	1800	4000	3800
F_y (N)	130	65	780	650	1900	1500	1900	1500
F_z (N)	400	210	1170	845	2100	1700	2100	1700
M_x (Nm)	3	1	20	13	85	60	85	60
M_y (Nm)	13	6	78	65	140	110	150	110
M_z (Nm)	24	12	52	39	110	90	120	90

All forces and torques related to the following:

existing values / table values: $\frac{Fy}{Fy_{dyn}} + \frac{Fz}{Fz_{dyn}} + \frac{Mx}{Mx_{dyn}} + \frac{My}{My_{dyn}} + \frac{Mz}{Mz_{dyn}} \leq 1$

No-load torque			
Nm	0,4	0,6	0,8	1,2
Speed				
(m/s) max	4	6	10	10
Geometrical moments of inertia of aluminium profile				
I_x mm⁴	$1{,}01 \times 10^5$	$4{,}47 \times 10^5$	$15{,}83 \times 10^5$	$35{,}51 \times 10^5$
I_y mm⁴	$1{,}31 \times 10^5$	$5{,}59 \times 10^5$	$20{,}68 \times 10^5$	$46{,}41 \times 10^5$
Elastic modulus N/mm²	70000	70000	70000	70000

For life-time calculation of rollers use our homepage.

Driving torque:

$$M_a = \frac{F * P * S_i}{2000 * \pi} + M_n$$

$$P_a = \frac{M_a * n}{9550}$$

F	= force	(N)
P	= pulley action perimeter	(mm)
Si	= safety factor 1,2 … 2	
M_n	= no-load torque	(Nm)
n	= rpm pulley	(min^{-1})
M_a	= driving torque	(Nm)
P_a	= motor power	(KW)

Deflection:

$$f = \frac{F * L^3}{E * I * 192}$$

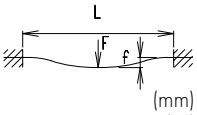

f	= deflection	(mm)
F	= load	(N)
L	= free length	(mm)
E	= elastic modulus 70000	(N/mm²)
I	= second moment of area	(mm⁴)

Linear system **LLZ 40, 60, 80, 100**

Dimensions (mm)

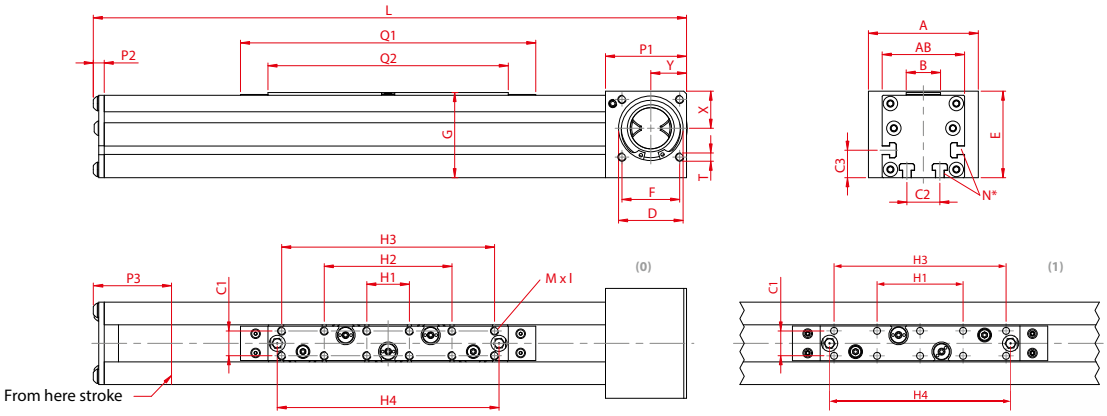

Hose connections available on request.

pulley block

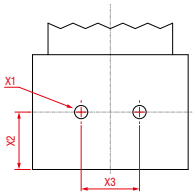

Size	X1	X2	X3
LL 40	---	---	---
LL 60	M8	29,5	30
LL 80	M10	47,5	40
LL 100	M12	55	50

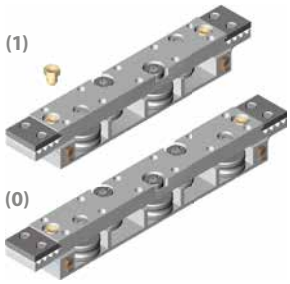

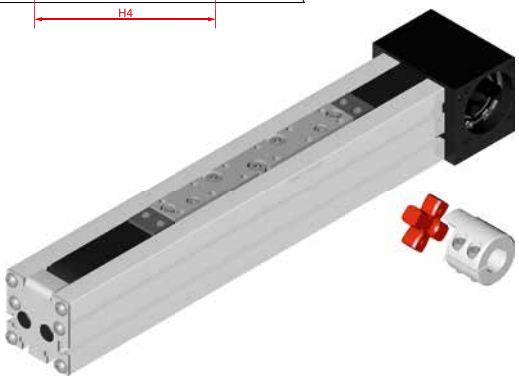

2 cupped-type lubricating nipples for each carriage

*For slide nuts refer to chapter 2.2 page 2

Size ❒	Basic length L	A	AB ❒	B	C1	C2	C3	D -0,05	E	F	G	M	N for	P1	P2	P3	T	X	Y	Basic weight	Weight per 100 mm
LLZ 40	222	52	40	15	10	12	14	28	41	25	42	M4x6	M4	36	4	34	M4	16	16	0,69 kg	0,22 kg
LLZ 60	330	80	60	25	18	24	20	47	63	42	62,5	M6x6	M5	59	6	55	M6	27	26	2,75 kg	0,41 kg
LLZ 80	495	100	80	25	18	30	22	68	93	60	83	M6x10	M6	90	9	84	M8	45	40	8,45 kg	0,90 kg
LLZ 100	540	130	100	42	26	40	30	90	110	80	103	M8x12	M8	110	11	109	M10	49,4	50	14,56 kg	1,18 kg

0 **Choice of guide body profile:**
(0) Standard **(2)** corrosion-protected guide rods and screws
(4) expanded corrosion-protected version (depending on the availability of components)

0 **Choice of carriages:**

(0)

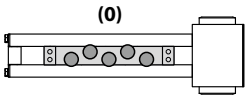

(1)

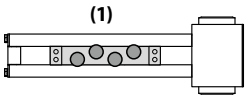

Carriage	L	Q1	Q2	H1	H2	H3	H4
LL 40 Vers. (0)	222	152	122	21	63	105	111
LL 40 Vers. (1)	200	130	100	42	---	84	90
LL 60 Vers. (0)	330	215	175	31	93	155	161,5
LL 60 Vers. (1)	299	184	144	62	---	124	130,5
LL 80 Vers. (0)	495	320	251	30	90	150	228
LL 80 Vers. (1)	435	260	191	40	---	120	168
LL 100 Vers. (0)	540	320	250	30	90	150	242
LL 100 Vers. (1)	481	261	191	30	90	150	183

0 **Drive version:**

0

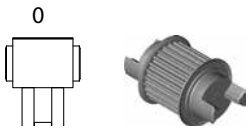

1

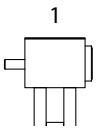

2

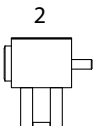

6

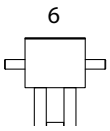

Belt table:

Code No.		Size	Belt	mm/rev.	Number of teeth
0	2	**40**	3M 20	75	25
0	3	**60**	5M 30	130	26
0	4	**80**	8M 30	176	22
0	7	**100**	8M 50	224	28

Shaft dimensions / Coupling claw:

Size	Shaft Ø h6 x length	Feather key	Coupling
40	6 x 15	2x2x12	7
60	14 x 35	5x5x28	14
80	18 x 45	6x6x40	19
100	22 h6 x 45	6x6x40	24

LLZ	60	1	0	0	0	0	3	1	1500
	Pos.	1	2	3	4	5	6	7	

Basic length + stroke = total length

Sample ordering code:
LLZ60, standard body profile, double-sided coupling claw, 1170 mm stroke

Linear system **LLN 60, 80**

BELT DRIVE

- LOW OPERATING VOLUME
- INDEPENDENT INSTALLATION POSITION
- NUBBED BELT
- LOW-VIBRATION RUN

Function:
The guide body consists of an aluminium square profile, with an integrated roller guide. The carriage is moved by a revolving interior nobbed belt. The advantage of this system: The belt is guided within the profile, so that the system is independent of the mounting position. The nobbed belt is self-tracking and has a very low operating noise level thanks to its nobs being offset by 45°. Furthermore, it is almost vibration-free in the transition sections. At the front face there is a timing belt deflection unit containing a toothed pulley with two coupling claws in the standard version. On the opposite side there is a bearing piece plate containing a tensioning device for the timing belt.

Mounting position: Variable, max. one-piece-length: 6.000 mm.
Carriage connection: By threaded holes.
Fixation: By T-slots and mounting sets. The linear axis can be combined with any T-slot profile.
Timing belt: N10 with reinforcing steel mesh, no backlash when changing direction, repeatability ± 0.1 mm.
Carriage support: The carriage runs on 5 rollers which can be adjusted and serviced at each central servicing position. Two grease nipples at the carriage enable relubrication of the positioning system.

Forces and torques

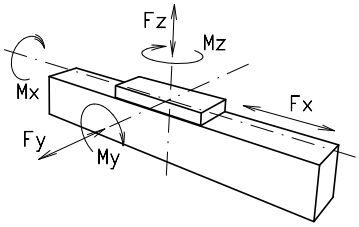

Size	60		80	
Forces/Torques	static	dynamic	static	dynamic
F_x (N)	1073	960	1900	1800
F_y (N)	780	650	1900	1500
F_z (N)	1170	845	2100	1700
M_x (Nm)	20	13	85	60
M_y (Nm)	78	65	140	110
M_z (Nm)	52	39	110	90
All forces and torques related to the following: existing values / table values $\frac{Fy}{Fy_{dyn}} + \frac{Fz}{Fz_{dyn}} + \frac{Mx}{Mx_{dyn}} + \frac{My}{My_{dyn}} + \frac{Mz}{Mz_{dyn}} \leq 1$				
No-load torque				
Nm	0,6		0,8	
Speed				
(m/s) max	6		10	
Geometrical moments of inertia of aluminium profile				
I_x mm^4	4,47x10^5		15,83x10^5	
I_y mm^4	5,59x10^5		20,68x10^5	
Elastic modulus N/mm^2	70000		70000	

For life-time calculation of rollers use our homepage.

Driving torque:

$$M_a = \frac{F*P*S_i}{2000*\pi} + M_n$$

$$P_a = \frac{M_a*n}{9550}$$

F = force (N)
P = pulley action perimeter (mm)
Si = safety factor 1,2 … 2
M_n = no-load torque (Nm)
n = rpm pulley (min^{-1})
M_a = driving torque (Nm)
P_a = motor power (KW)

Deflection:

$$f = \frac{F*L^3}{E*I*192}$$

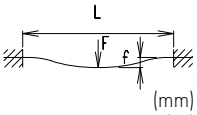

f = deflection (mm)
F = load (N)
L = free length (mm)
E = elastic modulus 70000 (N/mm^2)
I = second moment of area (mm^4)

Linear system **LLN 60, 80**

Dimensions (mm)

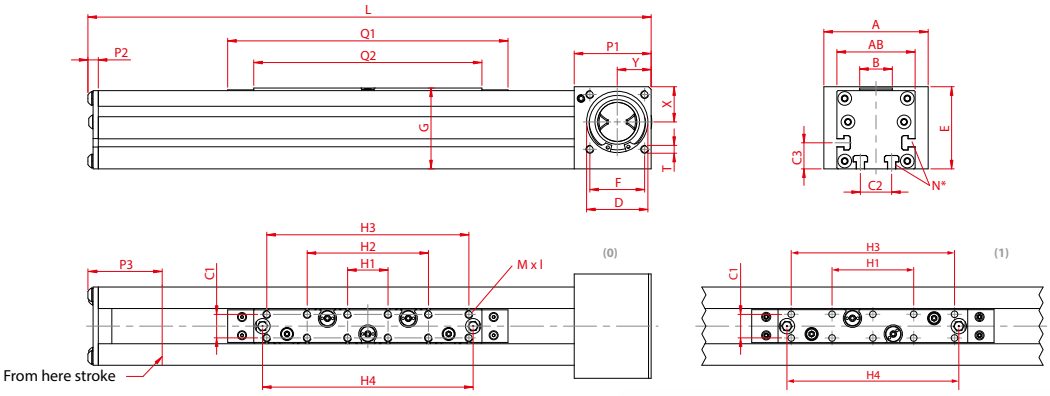

pulley-block

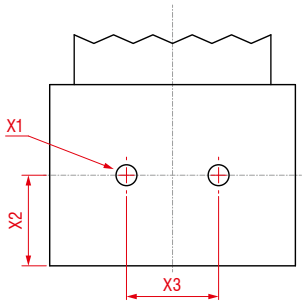

Size	X1	X2	X3
LL 60	M8	29,5	30
LL 80	M10	47,5	40

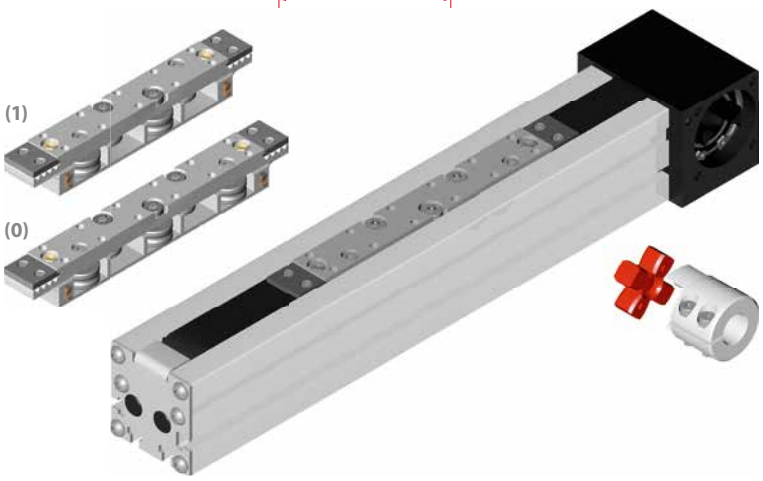

*For slide nuts refer to chapter 2.2 page 2

Size ❐	Basic length L	A	AB ❐	B	C1	C2	C3	D -0,05	E	F	G	M	N for	P1	P2	P3	T	X	Y	Basic weight	Weight per 100 mm
LLN 60	330	80	60	25	18	24	20	47	63	42	62,5	M6x6	M5	59	6	55	M6	27	26	2,75 kg	0,41 kg
LLN 80	495	100	80	25	18	30	22	68	93	60	83	M6x10	M6	90	9	84	M8	45	40	8,45 kg	0,90 kg

0 **Choice of guide body profile:**
(0) Standard **(2)** corrosion-protected guide rods and screws
(4) expanded corrosion-protected version (depending on the availability of components)

0 **Choice of carriages:**

(0)

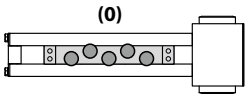

(1)

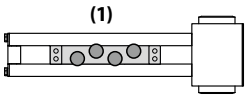

Carriage	L	Q1	Q2	H1	H2	H3	H4
LL 60 Vers. (0)	330	215	171	31	93	155	161,5
LL 60 Vers. (1)	299	184	140	62	---	124	130,5
LL 80 Vers. (0)	495	320	245	30	90	150	228
LL 80 Vers. (1)	435	260	185	40	---	120	168

0 **Drive version:**

0

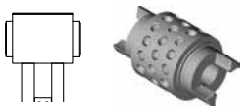

1

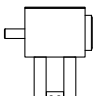

2

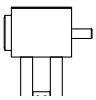

6

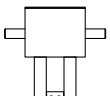

Belt table:

Code No.		Size	Belt	mm/rev.	Number of nubs
0	**8**	**60**	Nubbed belt N10	130	13
0	**8**	**80**	Nubbed belt N10	180	18

Shaft dimensions / Coupling claw:

Size	Shaft Ø h6 x length	Feather key	Coupling
60	14 x 35	5x5x28	14
80	18 x 45	6x6x45	19

LLN	60	1	0	0	0	0	8	1	1500
	Pos.	1	2	3	4	5	6	7	

Basic length + stroke = total length

Sample ordering code:
LLN60, standard body profile, double-sided coupling claw, 1170 mm stroke

Linear system **LLZS 60**

BELT DRIVE

INDEPENDENT INSTALLATION POSITION
OMEGA SYSTEM
VARIABLE DRIVE BLOCK

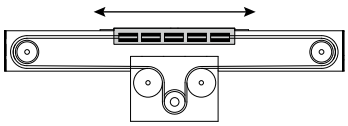

Function:
The guide body consists of an aluminium square profile, with an integrated roller guide. The carriage is moved by means of an rotating toothed belt. The toothed belt is diverted within a drive block positioned centrically. The result is an enormous compactness with regard to the overall system length. There is a plate on both sides with a tensioning device for the toothed belt.

Fitting position: As required. Max. length 6.000 mm without joints.
Carriage mounting: By tapped holes.
Unit mounting: By T-slots and mounting sets. The linear axis can be combined with any T-slot profile.
Belt performance: HTD with steel reinforcement, no backlash when changing direction, repeatability ± 0,1 mm.
Carriage support: The carriage runs on 5 rollers which can be adjusted and serviced at each central servicing position. Two grease nipples at the carriage enable relubrication of the positioning system.

Forces and torques

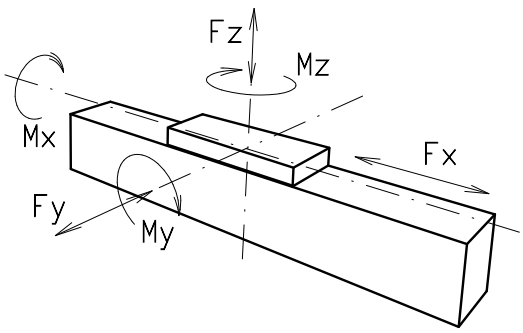

Size	**60**	
Forces/Torques	static	dynamic
F_x (N)	1073	960
F_y (N)	780	650
F_z (N)	1170	845
M_x (Nm)	20	13
M_y (Nm)	78	65
M_z (Nm)	52	39
All forces and torques related to the following: existing values / table values $\frac{Fy}{Fy_{dyn}} + \frac{Fz}{Fz_{dyn}} + \frac{Mx}{Mx_{dyn}} + \frac{My}{My_{dyn}} + \frac{Mz}{Mz_{dyn}} \leq 1$		
No-load torque		
Nm	0,6	
Speed		
(m/s) max	6	
Tensile force		
permanent (N)	1050	
0,2 s (N)	1150	
Geometrical moments of inertia of aluminium profile		
I_x mm^4	4,47x10^5	
I_y mm^4	5,59x10^5	
Elastic modulus N/mm^2	70000	

For life-time calculation of rollers use our homepage.

Driving torque:

$$M_a = \frac{F*P*S_i}{2000*\pi} + M_n$$

$$P_a = \frac{M_a*n}{9550}$$

F = force (N)
P = pulley action perimeter (mm)
Si = safety factor 1,2 … 2
M_n = no-load torque (Nm)
n = rpm pulley (min^{-1})
M_a = driving torque (Nm)
P_a = motor power (KW)

Deflection:

$$f = \frac{F*L^3}{E*I*192}$$

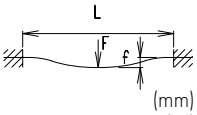

f = deflection (mm)
F = load (N)
L = free length (mm)
E = elastic modulus 70000 (N/mm^2)
I = second moment of area (mm^4)

Linear system **LLZS 60**

Dimensions (mm)

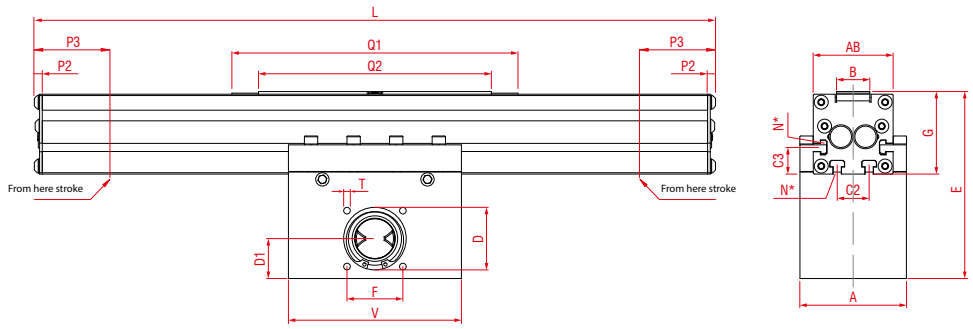

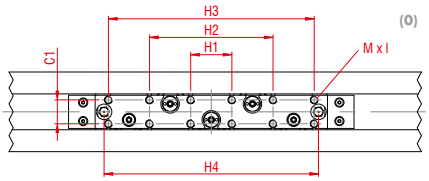

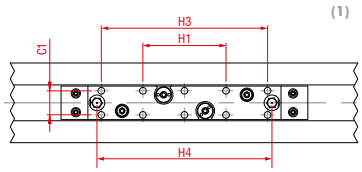

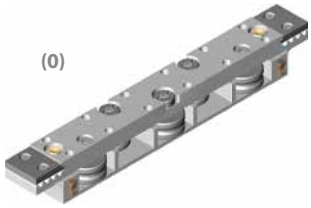

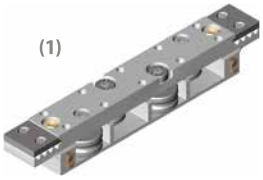

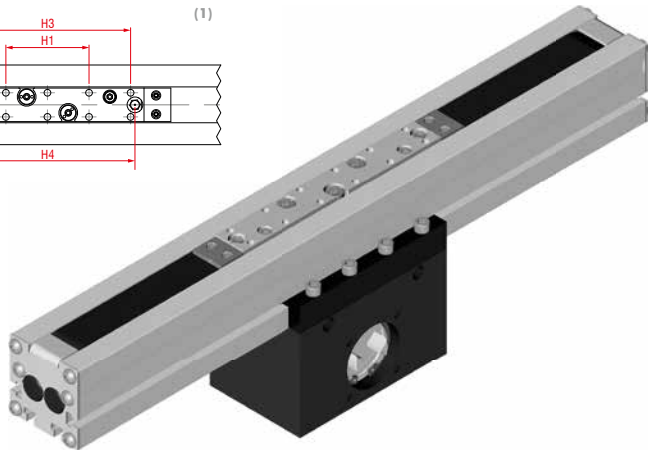

*For slide nuts refer to chapter 2.2 page 2

Size ❒	Basic length L	A	AB ❒	B	C1	C2	C3	D -0,05	D1	E	F	G	M	N for	P2	P3	T	V	Basic weight	Weight per 100 mm
LLZS 60	325	80	60	25	18	24	20	47	30	140,5	42	62	M6x6	M5	6	55	M6	130	4,1 kg	0,41 kg

0 **Choice of guide body profile:**
(0) Standard **(2)** corrosion-protected guide rods and screws
(4) expanded corrosion-protected version (depending on the availability of components)

0 **Choice of carriages:**

(0)

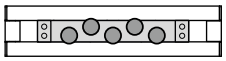

(1)

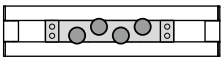

Carriage	L	Q1	Q2	H1	H2	H3	H4
LL 60 Vers. (0)	325	215	175	31	93	155	161,5
LL 60 Vers. (1)	294	184	144	62	---	124	130,5

0 **Drive version:**

0

0 1 6

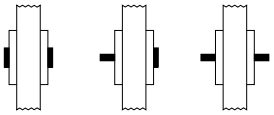

Belt table:

Code No.		Size	Belt	mm/rev.	Number of teeth
0	**3**	**60**	5M 30	130	26

Shaft dimensions / Coupling claw:

Size	Shaft Ø h6 x length	Feather key	Coupling
60	14 x 35	5x5x28	14

LLZS	60	1	0	0	0	0	3	1	1500
	Pos.	1	2	3	4	5	6	7	

Basic length + stroke = total length

Sample ordering code:
LLZS60, standard body profile, double-sided coupling claw, 1175 mm stroke

Linear system **LLR 40, 60, 80**

ROLLER GUIDE

- WITHOUT DRIVE
- SUPPORT UNIT
- WITHOUT COVERBAND

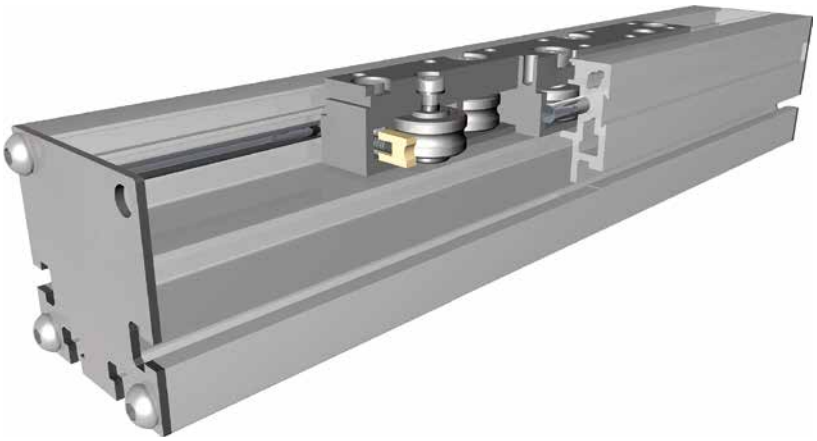

Function:
The guide body consists of an aluminium square profile, with an integrated roller guide. This roller guide can be driven by a pneumatic cylinder or other additional drives or it serves as a load carrying slide unit. Construction compatible with LLZ/LLN.

Fitting position: As required. Max. length 6.000 mm without joints.
Carriage mounting: By tapped holes.
Unit mounting: By T-slots and mounting sets. The linear axis can be combined with any T-slot profile.
Carriage support: The carriage runs on 5 rollers which can be adjusted and serviced at each central servicing position. Two grease nipples at the carriage enable relubrication of the positioning system.

Forces and torques

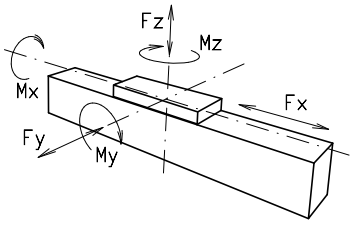

Size	40		60		80	
Forces/Torques	static	dynamic	static	dynamic	static	dynamic
F_x (N)	---	---	---	---	---	---
F_y (N)	130	65	780	650	1900	1500
F_z (N)	400	210	1170	845	2100	1700
M_x (Nm)	3	1	20	13	85	60
M_y (Nm)	13	6	78	65	140	110
M_z (Nm)	24	12	52	39	110	90

All forces and torques related to the following:

existing values / table values: $\frac{Fy}{Fy_{dyn}} + \frac{Fz}{Fz_{dyn}} + \frac{Mx}{Mx_{dyn}} + \frac{My}{My_{dyn}} + \frac{Mz}{Mz_{dyn}} \leq 1$

No-load torque			
Nm	0,4	0,6	0,8
Speed			
(m/s) max	4	6	10
Tensile force			
permanent (N)	---	1050	1900
0,2 s (N)	---	1150	2090
Geometrical moments of inertia of aluminium profile			
I_x mm^4	$1{,}01 \times 10^5$	$4{,}47 \times 10^5$	$15{,}83 \times 10^5$
I_y mm^4	$1{,}31 \times 10^5$	$5{,}59 \times 10^5$	$20{,}68 \times 10^5$
Elastic modulus N/mm^2	70000	70000	70000

For life-time calculation of rollers use our homepage.

Deflection:

$$f = \frac{F * L^3}{E * I * 192}$$

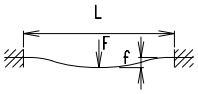

f = deflection (mm)
F = load (N)
L = free length (mm)
E = elastic modulus 70000 (N/mm^2)
I = second moment of area (mm^4)

Linear system **LLR 40, 60, 80**

Dimensions (mm)

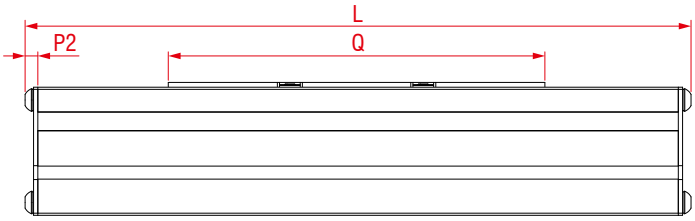

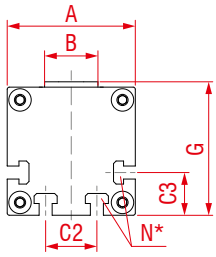

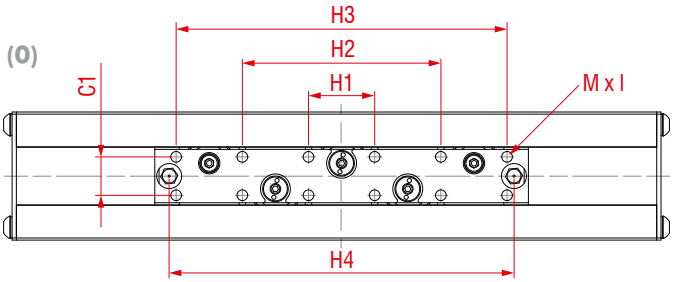

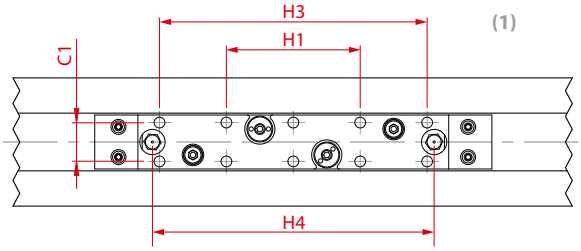

2 cupped-type lubricating nipples for each carriage

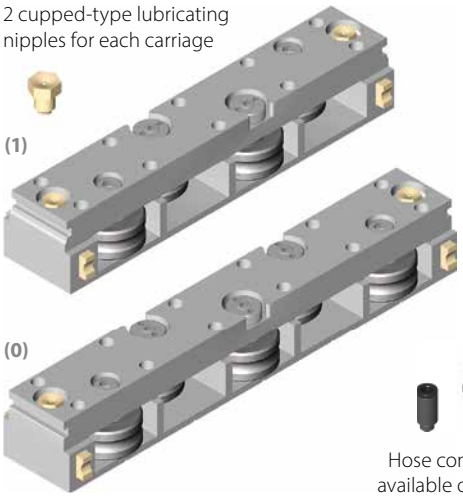

Hose connections available on request.

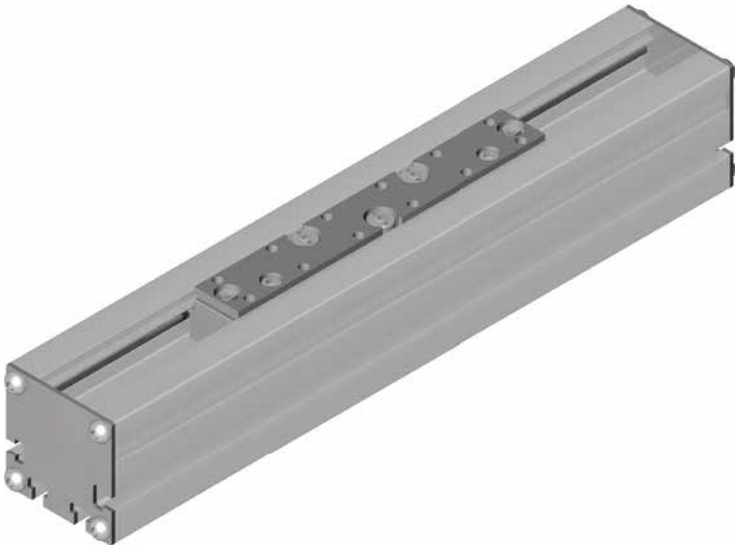

*For slide nuts refer to chapter 2.2 page 2

Size ❐	Basic lenght L	A ❐	B	C1	C2	C3	G	Mxl	N for	P2	Q	Basic weight	Weight per 100 mm
LLR 40	107	40	15	10	12	14	42	M4	M4	4	98	0,371 kg	0,212 kg
LLR 60	187	60	25	18	24	20	62,5	M6	M5	6	175	1,145 kg	0,377 kg
LLR 80	337	80	25	18	30	22	83	M6	M6	9	320	4,110 kg	0,730 kg

0 **Choice of guide body profile:**
(0) Standard **(2)** corrosion-protected guide rods and screws
(4) expanded corrosion-protected version (depending on the availability of components)

0 **Choice of carriages:**

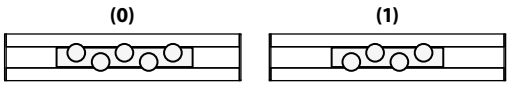

Carriage	L	Q1	H1	H2	H3	H4
LL 40 Version (0)	129	120	21	63	105	111
LL 40 Version (1)	107	98	42	---	84	90
LL 60 Version (0)	187	175	31	93	155	161,5
LL 60 Version (1)	158	144	62	---	124	130,5
LL 80 Version (0)	337	320	30	90	150	305
LL 80 Version (1)*	277	260	40	120	200	245

* Hole pattern like version (0)

LLR	60	0	0	0	0	0	0	0	1500
	Pos.	1	2	3	4	5	6	7	

Basic length + stroke = total length

Sample ordering code:
LLR60, standard body profile, carriage (0), 1312 mm stroke

Application example

LLZ 60 - DLZ 120

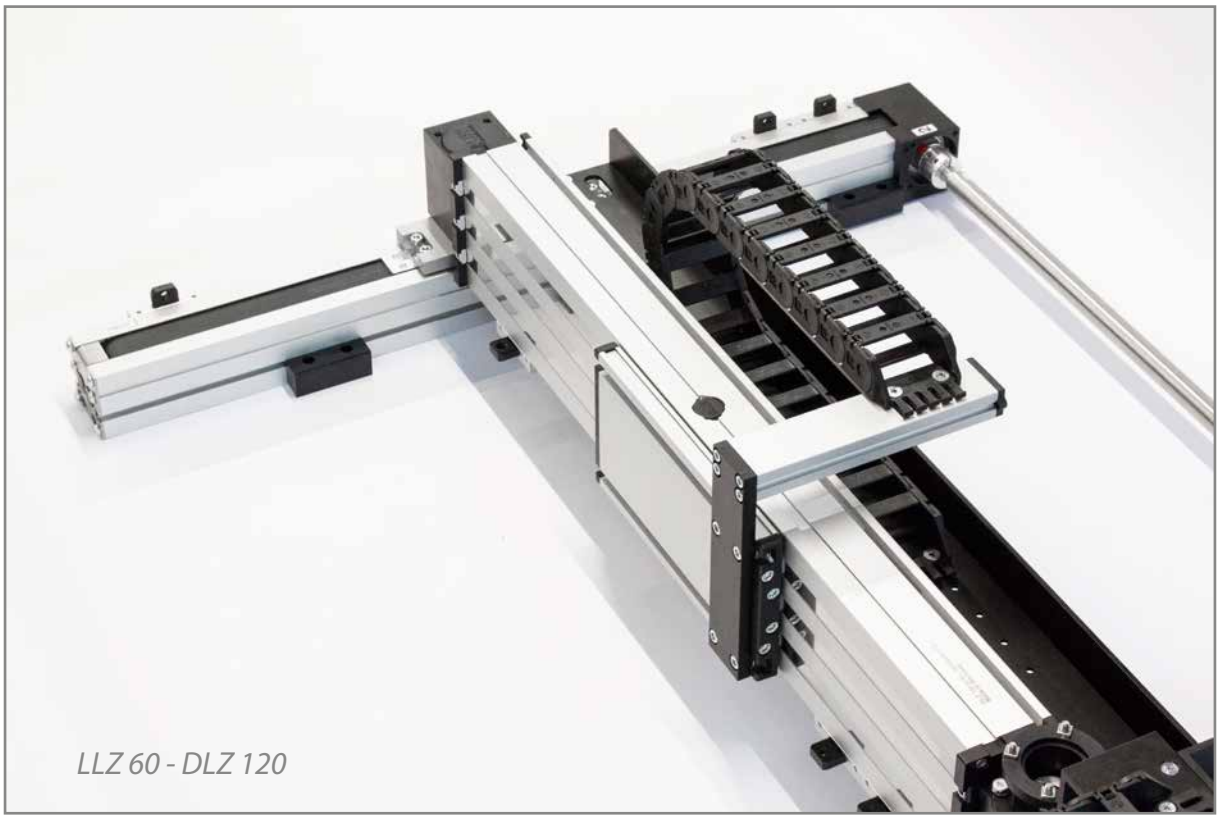

LLZ 60 - DLZ 120

Belt driven positioning systems LS

Linear system **LSZ 60, 80, 100**

BELT DRIVE

- INDEPENDENT INSTALLATION POSITION
- LONG TRAVERSE PATH >6000 MM
- HIGH TORQUE ABSORPTION

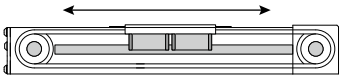

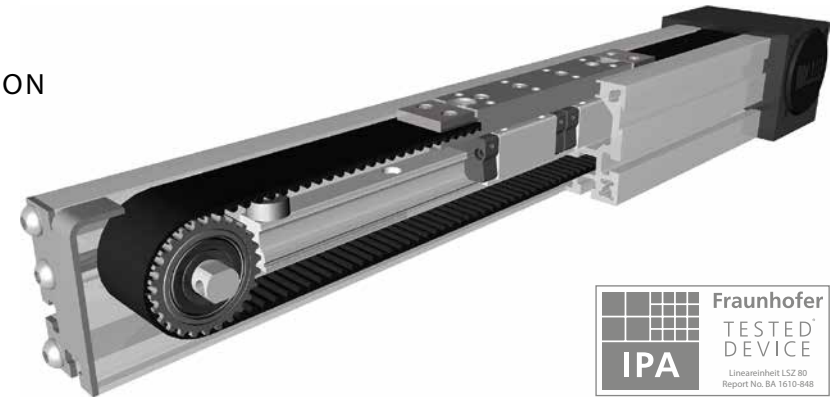

Fraunhofer TESTED DEVICE IPA
Lineareinheit LSZ 80
Report No. BA 1610-848

Function:
The guide body consists of an aluminium square profile with an integrated rail guide. The carriage is moved by means of a revolving interior timing belt. At the front face there is a timing belt deflection unit with integrated coupling claws integrated on two sides. The opposite front face is provided with a plate containing a tensioning device for the timing belt. With this series, multi-part assembled units with long strokes can be realized.

Mounting position: Variable, max. one-piece-length: 6.000 mm.
Carriage connection: By threaded holes.
Fixation: By T-slots and mounting sets. The linear axis can be combined with any T-slot profile.
Timing belt: HTD with reinforcing steel mesh, no backlash when changing direction, repeatability ± 0.1 mm.
Carriage support: In the standard version the carriage is positioned on two runner blocks which can be readjusted and maintained at each central servicing position. Two grease nipples at the carriage enable relubrication of the positioning system.

Forces and torques

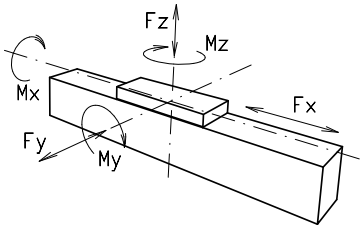

Size	60		80		100	
permitted dyn. Forces*	5000 km	10000 km	5000 km	10000 km	5000 km	10000 km
F_x (N)	1073	960	1900	1800	4000	3800
F_y (N)	1410	990	3570	2550	4080	2900
F_z (N)	3520	2500	8500	6050	10300	7270
M_x (Nm)	33	23	107	75	142	101
M_y (Nm)	104	73	310	222	439	311
M_z (Nm)	100	70	296	210	412	292

All forces and torques related to the following:
existing values / table values: $\frac{Fy}{Fy_{dyn}} + \frac{Fz}{Fz_{dyn}} + \frac{Mx}{Mx_{dyn}} + \frac{My}{My_{dyn}} + \frac{Mz}{Mz_{dyn}} \leq 1$

No-load torque			
Nm	0,6	1,0	1,8
Speed			
(m/s) max	5	5	5
Geometrical moments of inertia of aluminium profile			
I_x mm^4	4,37x10^5	14,6x10^5	35,51x10^5
I_y mm^4	5,78x10^5	17,1x10^5	46,41x10^5
Elastic modulus N/mm^2	70000	70000	70000

For life-time calculation use our homepage.

** referred to life-time*

Driving torque:

$$M_a = \frac{F*P*S_i}{2000*\pi} + M_n$$

$$P_a = \frac{M_a*n}{9550}$$

F = force (N)
P = pulley action perimeter (mm)
Si = safety factor 1,2 … 2
M_n = no-load torque (Nm)
n = rpm pulley (min^{-1})
M_a = driving torque (Nm)
P_a = motor power (KW)

Deflection:

$$f = \frac{F*L^3}{E*I*192}$$

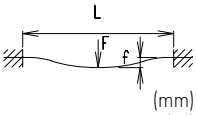

f = deflection (mm)
F = load (N)
L = free length (mm)
E = elastic modulus 70000 (N/mm^2)
I = second moment of area (mm^4)

BAHR Modultechnik
EDELSTAHL Rost frei
TÜV NORD
AEO

Linear system **LSZ 60, 80, 100**

Dimensions (mm)

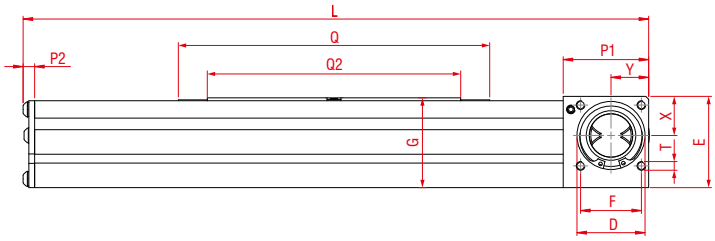

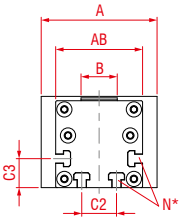

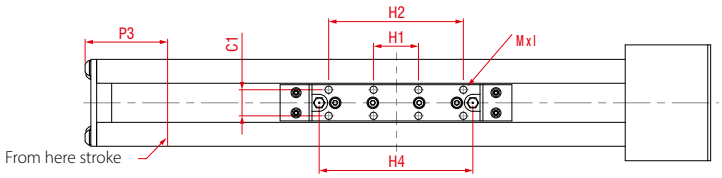

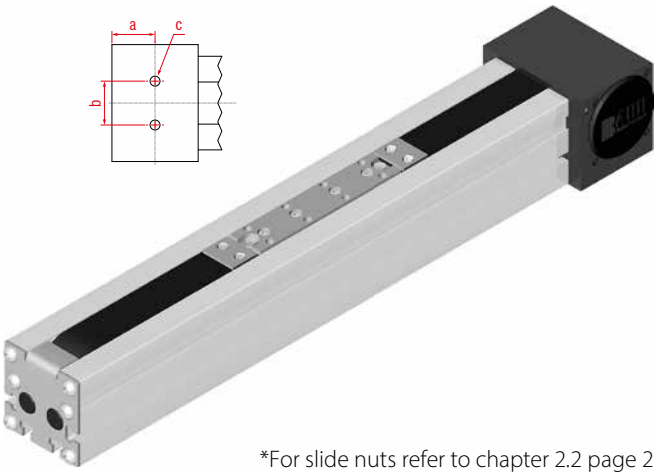

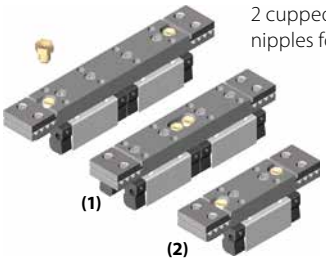

2 cupped-type lubricating nipples for each carriage

Hose connections available on request.

*For slide nuts refer to chapter 2.2 page 2

Size ❒	A	AB ❒	B	C1	C2	C3	D -0,05	E	F ❒	G	Mxl	N for	P1	P2	P3	T	X	Y	a	b	c	Weight per 100 mm
LSZ 60	80	60	25	18	24	20	47	63	42	62,5	M6x10	M5	59	6	55	M6	27	26	29,5	30	M8	0,53 kg
LSZ 80	100	80	25	18	30	22	68	93	60	83	M6x12	M6	90	8	73	M8	45	40	47,5	40	M10	0,87 kg
LSZ 100	130	100	42	30	40	30	90	110	80	103	M8x12	M8	110	11	109	M10	49,4	50	55	50	M12	1,35 kg

0 **Choice of guide body profile:**
(0) Standard **(1)** corrosion-protected screws
(4) expanded corrosion-protected version
(depending on the availability of components)

Carriage		L	Q	Q2	H1	H2	H4	Basic weight System
LS 60	Version (0)	274	160	116	31	93	106	3,06 kg
	Version (1)	254	140	96	32	84	10	2,62 kg
	Version (2)	214	100	56	31	--	48	2,07 kg
LS 80	Version (0)	382	219	149	40	120	133	7,69 kg
	Version (1)	367	204	134	40	120	12,5	7,41 kg
	Version (2)	310	147	77	40	--	60,5	6,39 kg
LS 100	Version (0)	470	251	180	33	99	172	12,43 kg
	Version (1)	455	235	164	83	149	18	12,20 kg
	Version (2)	370	151	80	66	---	69	10,43 kg

0 **Choice of carriages:**

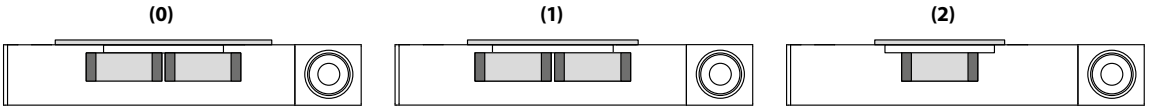

0 **Drive version:**

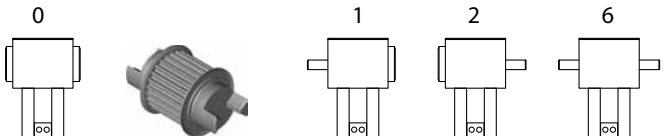

Belt table:

Code No.		Size	Belt	mm/rev.	Number of teeth
0	3	**60**	5M 30	130	26
0	4	**80**	8M 30	176	22
0	7	**100**	8M 50	224	28

Shaft dimensions / Coupling claw:

Size	Shaft Ø h6 x length	Feather key	Coupling
60	14 x 35	5x5x28	14
80	18 x 45	6x6x40	19
100	22 x 45	6x6x40	24

LSZ	60	1	0	0	0	0	3	1	1500
	Pos.	1	2	3	4	5	6	7	

Basic length + stroke = total length

Sample ordering code:
LSZ60, standard body profile, standard carriage , double-sided coupling claw, 1226 mm stroke

Linear system **LSN 60, 80**

NUBBED BELT DRIVE

- LOW OPERATING VOLUME
- INDEPENDENT INSTALLATION POSITION
- NUBBED BELT
- LOW-VIBRATION RUN
- FOR 3D PRINTING APPLICATIONS

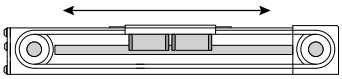

Function:
The guide body consists of an aluminium square profile with an integrated rail guide. The carriage is moved by a revolving interior nobbed belt. The advantage of this system: The belt is guided within the profile, so that the system is independent of the mounting position. The nobbed belt is self-tracking and has a very low operating noise level thanks to its nobs being offset by 45°. Furthermore, it is almost vibration-free in the transition sections. At the front face there is a timing belt deflection unit containing a toothed pulley with two coupling claws in the standard version. On the opposite side there is a bearing piece plate containing a tensioning device for the timing belt.

Mounting position: Variable, max. one-piece-length: 6.000 mm.
Carriage connection: By threaded holes.
Fixation: By T-slots and mounting sets. The linear axis can be combined with any T-slot profile.
Timing belt: N10 with reinforcing steel mesh, no backlash when changing direction, repeatability ± 0.1 mm.
Carriage support: In the standard version the carriage is positioned on two runner blocks which can be readjusted and maintained at each central servicing position. Two grease nipples at the carriage enable relubrication of the positioning system.

Forces and torques

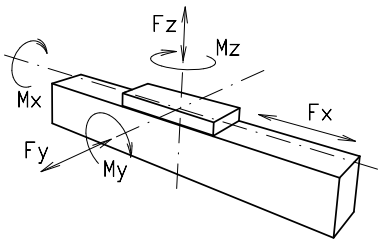

Size	60		80	
permitted dyn. Forces*	5000 km	10000 km	5000 km	10000 km
F_x (N)	1170	1040	1900	1800
F_y (N)	1410	990	3570	2550
F_z (N)	3520	2500	8500	6050
M_x (Nm)	33	23	107	75
M_y (Nm)	104	73	310	222
M_z (Nm)	100	70	296	210
All forces and torques related to the following: existing values / table values $\frac{Fy}{Fy_{dyn}} + \frac{Fz}{Fz_{dyn}} + \frac{Mx}{Mx_{dyn}} + \frac{My}{My_{dyn}} + \frac{Mz}{Mz_{dyn}} \leq 1$				
No-load torque				
Nm	0,6		1,0	
Speed				
(m/s) max	5		5	
Geometrical moments of inertia of aluminium profile				
I_x mm^4	$4{,}37 \times 10^5$		$14{,}6 \times 10^5$	
I_y mm^4	$5{,}78 \times 10^5$		$17{,}1 \times 10^5$	
E-Modul N N/mm^2	70000		70000	

For life-time calculation use our homepage.

** referred to life-time*

Driving torque:

$$M_a = \frac{F * P * S_i}{2000 * \pi} + M_n$$

$$P_a = \frac{M_a * n}{9550}$$

F	= force	(N)
P	= pulley action perimeter	(mm)
Si	= safety factor 1,2 … 2	
M_n	= no-load torque	(Nm)
n	= rpm pulley	(min^{-1})
M_a	= driving torque	(Nm)
P_a	= motor power	(KW)

Deflection:

$$f = \frac{F * L^3}{E * I * 192}$$

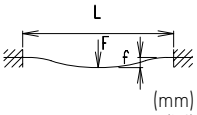

f	= deflection	(mm)
F	= load	(N)
L	= free length	(mm)
E	= elastic modulus 70000	(N/mm^2)
I	= second moment of area	(mm^4)

BAHR Modultechnik
EDELSTAHL Rost frei
TÜV NORD
AEO

Linear system **LSN 60, 80**

Dimensions (mm)

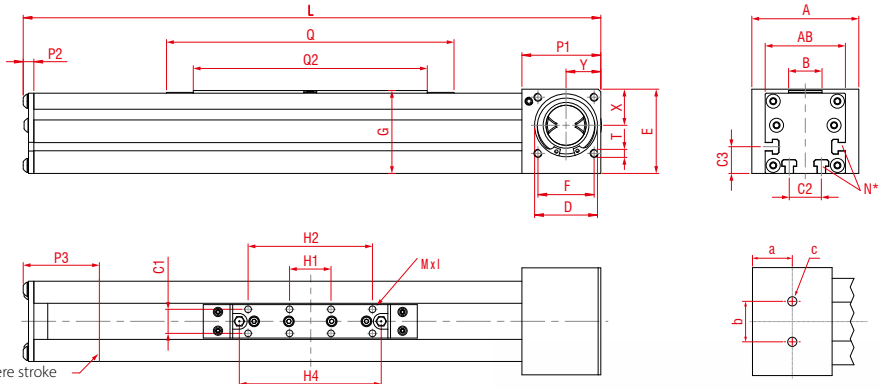

2 cupped-type lubricating nipples for each carriage

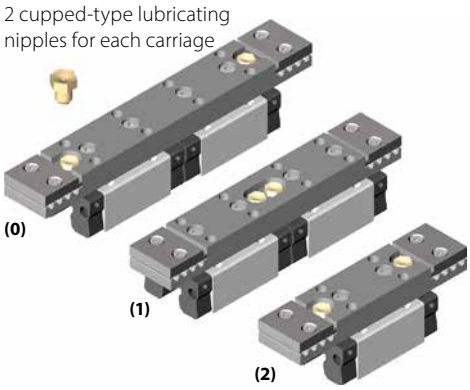

Hose connections available on request.

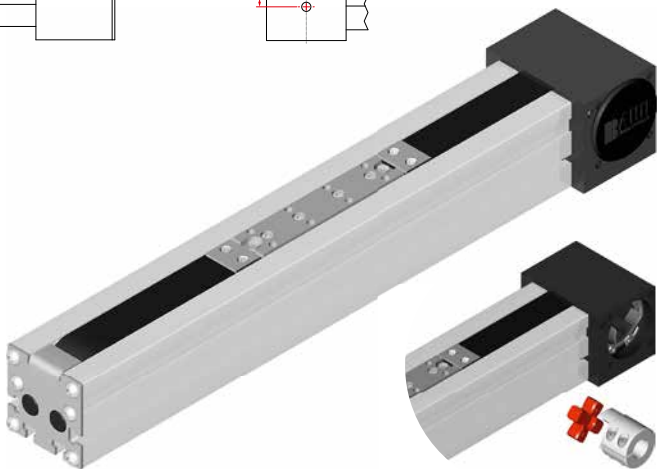

*For slide nuts refer to chapter 2.2 page 2

Size ❒	A	AB ❒	B	C1	C2	C3	D -0,05	E	F ❒	G	Mxl	N for	P1	P2	P3	T	X	Y	a	b	c	Weight per 100 mm
LSN 60	80	60	25	18	24	20	47	63	42	62,5	M6x10	M5	59	6	55	M6	27	26	29,5	30	M8	0,53 kg
LSN 80	100	80	25	18	30	22	68	93	60	83	M6x12	M6	90	8	73	M8	45	40	47,5	40	M10	0,87 kg

0 **Choice of guide body profile:**
(0) Standard **(1)** corrosion-protected screws

Carriage		L	Q	Q2	H1	H2	H4	Basic weight system
LS 60	Version (0)	274	160	116	31	93	106	3,06 kg
	Version (1)	254	140	96	32	84	10	2,62 kg
	Version (2)	214	100	56	31	--	48	2,07 kg
LS 80	Version (0)	382	219	149	40	120	133	7,69 kg
	Version (1)	367	204	134	40	120	12,5	7,41 kg
	Version (2)	310	147	77	40	--	60,5	6,39 kg

0 **Choice of carriages:**

(0) **(1)** **(2)**

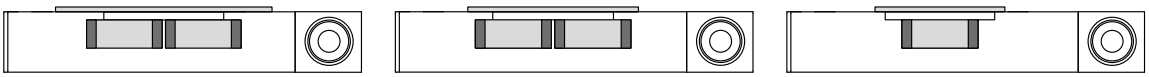

0 **Drive version:**

0 1 2 6

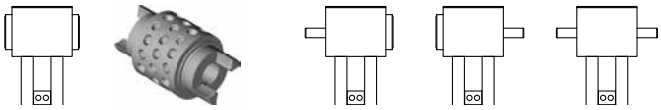

Belt table:

Code No.		Size	Belt	mm/rev.	Number of nubs
0	8	60	Nubbed belt N10	130	13
0	8	80	Nubbed belt N10	180	18

Shaft dimensions / Coupling claw:

Size	Shaft Ø h6 x length	Feather key	Coupling
60	14 x 35	5x5x28	14
80	18 x 45	6x6x40	19

LSN	60	1	0	0	0	0	8	1	1500
	Pos.	1	2	3	4	5	6	7	

Basic length + stroke = total length

Sample ordering code:
LSN60, standard body profile, standard carriage , nubbed belt, double-sided coupling claw, 1226 mm stroke

Linear system **LSR 60, 80**

RAIL GUIDE

- WITHOUT DRIVE
- SUPPORT UNIT
- WITHOUT COVERBAND

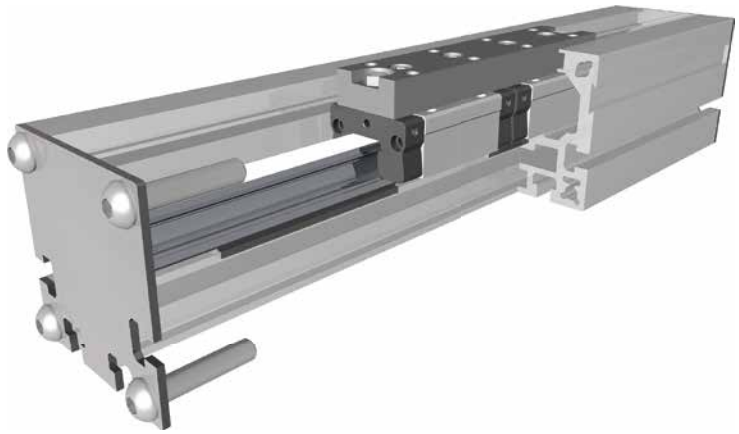

Function:
The guide body consists of an aluminium square profile, with an integrated rail guide. This rail guide can be driven by a pneumatic cylinder or other additional drives or it serves as a load carrying slide unit. Construction compatible with LSZ/LSN.

Fitting position: As required. Max. length 6.000 mm without joints.
Carriage mounting: By tapped holes.
Unit mounting: By T-slots and mounting sets. The linear axis can be combined with any T-slot profile.
Carriage support: In the standard version the carriage is positioned on two runner blocks which can be readjusted and maintained at each central servicing position. Two grease nipples at the carriage enable relubrication of the positioning system.

Forces and torques

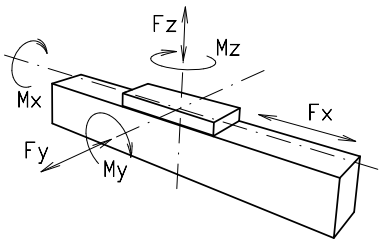

Size	60		80	
permitted dyn. Forces*	5000 km	10000 km	5000 km	10000 km
F_x (N)	--	--	--	--
F_y (N)	1410	990	3570	2550
F_z (N)	3520	2500	8500	6050
M_x (Nm)	33	23	107	75
M_y (Nm)	104	73	310	222
M_z (Nm)	100	70	296	210
All forces and torques related to the following: existing values / table values $\frac{Fy}{Fy_{dyn}} + \frac{Fz}{Fz_{dyn}} + \frac{Mx}{Mx_{dyn}} + \frac{My}{My_{dyn}} + \frac{Mz}{Mz_{dyn}} \leq 1$				
No-load torque				
Nm	0,6		1,0	
Speed				
(m/s) max	5		5	
Tensile force				
permanent (N)	1050		1900	
0,2 s (N)	1150		2090	
Geometrical moments of inertia of aluminium profile				
I_x mm^4	$4{,}37 \times 10^5$		$14{,}6 \times 10^5$	
I_y mm^4	$5{,}78 \times 10^5$		$17{,}1 \times 10^5$	
Elastic modulus N/mm^2	70000		70000	

For life-time calculation use our homepage.

** referred to life-time*

Deflection:

$$f = \frac{F * L^3}{E * I * 192}$$

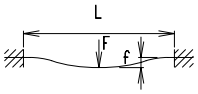

f = deflection (mm)
F = load (N)
L = free length (mm)
E = elastic modulus 70000 (N/mm²)
I = second moment of area (mm⁴)

Linear system **LSR 60, 80**

Dimensions (mm)

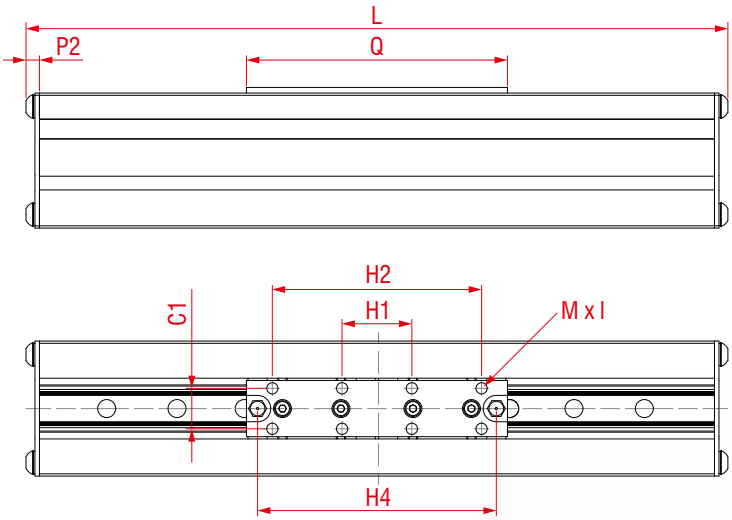

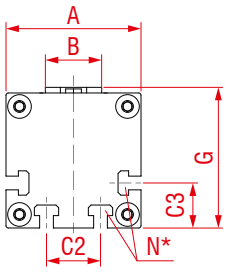

2 cupped-type lubricating nipples for each carriage

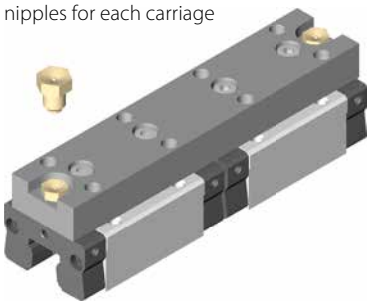

Hose connections available on request.

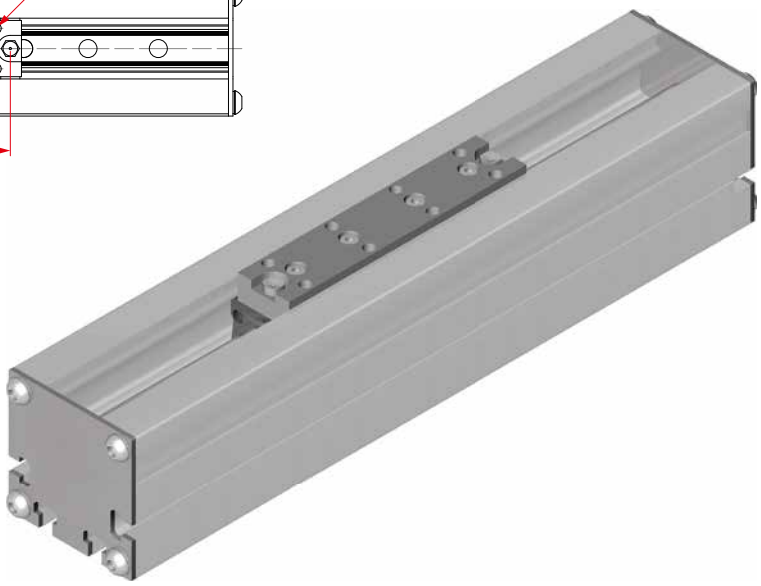

*For slide nuts refer to chapter 2.2 page 2

Size ❒	Basic lenght L	A ❒	B	C1	C2	C3	G	H1	H2	H4	MxI	N for	P2	Q	Basic weight	Weight per 100 mm
LSR 60	162	60	25	18	24	20	62,5	31	93	106	M6 x 11	M5	6	116	1,54 kg	0,43 kg
LSR 80	166	80	25	18	30	22	83	40	120	133	M6 x 12	M6	8	149	2,19 kg	0,88 kg

0 **Choice of guide body profile:**
(0) Standard **(1)** corrosion-protected screws
(4) expanded corrosion-protected version (depending on the availability of components)

0 **Choice of carriages:**

(0)

LSR	60	0	0	0	0	0	0	0	1500
	Pos.	1	2	3	4	5	6	7	

Basic length + stroke = total length

Sample ordering code:
LSR60, standard body profile, standard carriage, 1338 mm stroke

Application examples

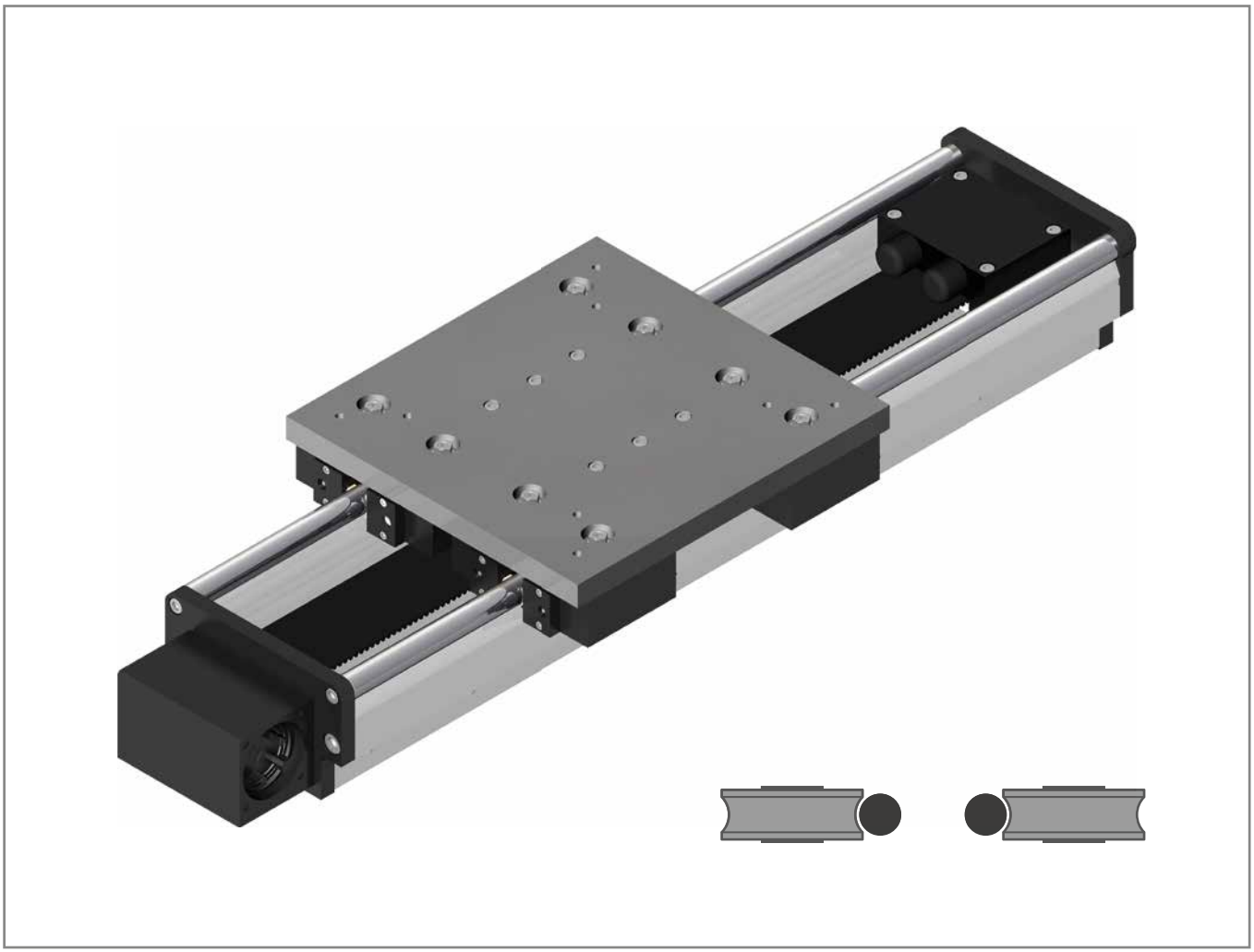

ALLM | ALLZ | ALLZQ | ALLR

Roller guide

Linear system **ALLM 203, 204**

LINEAR MOTOR DRIVE

- ROLLER GUIDE
- HEAVY LOAD
- HIGH LOAD CAPACITY
- LINEAR MOTOR

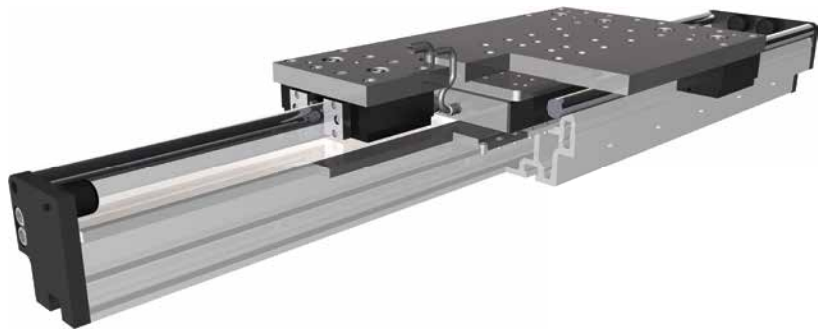

Function:
This unit consists of an aluminium profile with hardened steel spindles mounted on top of the profile. The carriage, which has internal linear ball bearings that can be adjusted free of play, moves along the unit. The linear-motor ALLM unit is based on the principle of a linear, synchronous AC motor. The guiding profile is fitted with permanent magnets as stator. The carriage is fitted with the actuator. The magnetic attraction causes a force between carriage and guiding profile also in the absence of current. This force can be used for the initial tension of the bearings. Several carriages can be driven independently on one guiding profile.

Fitting position: As required. Max. length 5.000 mm without joints.
Carriage mounting: By tapped holes.
Unit mounting: By T-slots and mounting sets. The linear axis can be combined with any T-slot profile.
Carriage support: In the standard version, the carriage runs on 8 rollers which can be adjusted and serviced. For longer carriages the number of rollers can be increased. Repeatability ± 0,05 mm.

Forces and torques

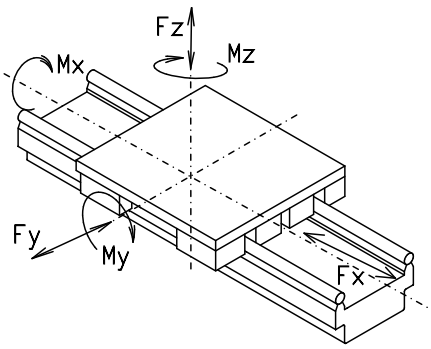

Size	ALLM 203		ALLM 204	
Forces/Torques	static	dynamic	static	dynamic
F_y (N)	23000	18400	30000	24000
F_z (N)	11000	8800	16250	13000
M_x (Nm)	1200	950	1870	1500
M_y (Nm) Motor 1	3060	2450	5000	4000
M_z (Nm) Motor 1	6250	5100	9500	7600
M_y (Nm) Motor 2	4010	3210	6520	5220
M_z (Nm) Motor 2	8340	6670	12180	9750
All forces and torques related to the following:				
existing values / table values	$\frac{Fy}{Fy_{dyn}} + \frac{Fz}{Fz_{dyn}} + \frac{Mx}{Mx_{dyn}} + \frac{My}{My_{dyn}} + \frac{Mz}{Mz_{dyn}} \leq 1$			
Transverse force without current				
N	35		45	
Moved mass (g) without motor	43	48	55	62
Speed				
Motor size / weight (kg)	1 / 17,2	2 / 25,5	1 / 17,2	2 / 25,5
(m/s) max	8	8	8	8
Thrust				
permanent (N)	2600	3900	2600	3900
Max. (N)	4000	6010	4000	6010
Geometrical moments of inertia of aluminium profile				
I_x mm⁴	$2{,}26 \times 10^7$		$2{,}98 \times 10^7$	
I_y mm⁴	$8{,}75 \times 10^7$		$10{,}22 \times 10^7$	
Elastic modulus N/mm²	70000		70000	

For life-time calculation of rollers use our homepage.

Deflection:

$$f = \frac{F * L^3}{E * I * 192}$$

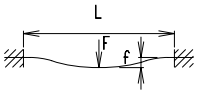

f = deflection (mm)
F = load (N)
L = free length (mm)
E = elastic modulus 70000 (N/mm²)
I = second moment of area (mm⁴)

BAHR Modultechnik

Linear system **ALLM 203, 204**

Dimensions (mm)

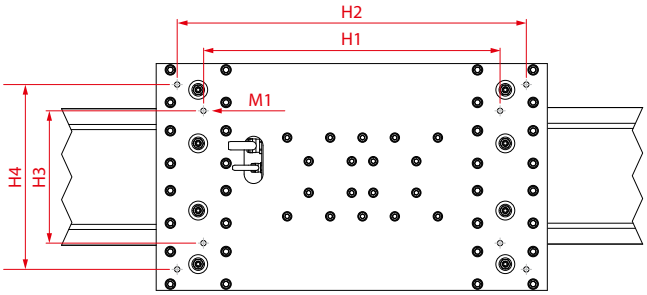

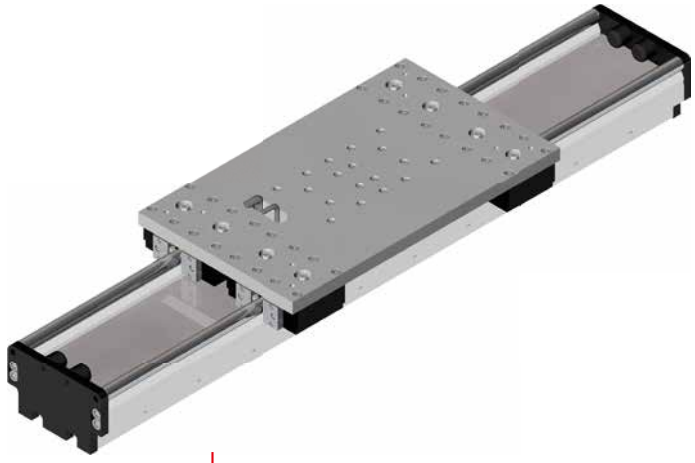

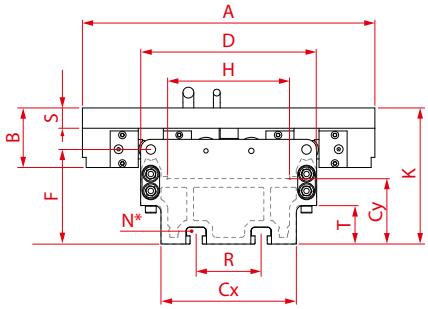

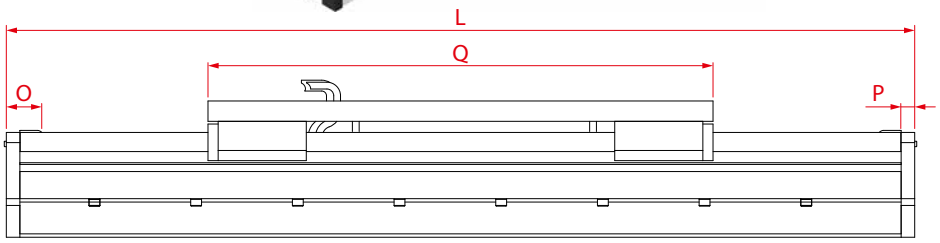

Increasing the carriage length will increase the basic length by the same amount.

Size	Basic length L motor size	A	B	Cx	Cy	D	F	H	K	M1	N for	O	P	R	S	T	Basic weight motor size	Weight per 100 mm
ALLM 203	865	432	88	200	97	260	139,6	180,5	200,6	M12	M16	60	20	96	30	57	110	5,6 kg
ALLM 204	925	480	102,5	200	97	270	139,6	180,5	217,6	M12	M16	60	20	96	30	57	136	6,5 kg

Carriage	Q motor size	H1	H2	H3	H4
ALLM 203	745	565	665	252	352

3 **Guide rod size:**
(3) Ø=30 **(4)** Ø=40

0 **Choice of guide body profile:**
(0) Standard **(2)** corrosion-protected guide rods and screws
(4) expanded corrosion-protected version (depending on the availability of components)

1 **Measurement system:**
(1) Measurement system LE100 5V Resolution 0.05
(2) Measurement system LE100 10,5-30V Resolution 0.05
(3) Hall sensor
(4) Measurement system provided by customer

0 **Motor size:**
(0) Motor size 1
(2) without Motor, for Motorsize 1

ALLM 20	3	0	0	1	0	0	0	0	2000
Pos.		1	2	3	4	5	6	7	

Basic length + stroke = total length

Sample ordering code:
ALLM203, guide rods 30 mm, standard body profile, Measurement system LE100 5V, motor size 1, 1135 mm stroke.

Linear system **ALLZ 203, 204**

BELT DRIVE

- ROLLER GUIDE
- HEAVY LOAD
- HIGH LOAD CAPACITY

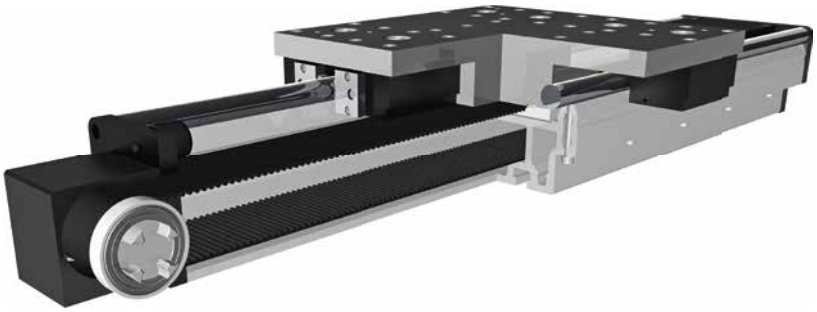

Function:
This unit consists of an aluminium profile with hardened steel guide rods mounted on top of the profile. The carriage, which has internal linear ball bearings that can be adjusted free of play, is driven along the guide rods by a timing belt. The pulleys have maintenance-free ball bearings. Opposite the driven side there is an integrated timing-belt tensioner which can be readjusted by 2 screws.

Fitting position: As required. Max. length 5.000 mm without joints.
Carriage mounting: By tapped holes.
Unit mounting: By T-slots and mounting sets. The linear axis can be combined with any T-slot profile.
Carriage support: In the standard version, the carriage runs on 8 rollers which can be adjusted and serviced at a central servicing position. For longer carriages the number of rollers can be increased. Repeatability ± 0,1.
Belt type: HTD with steel reinforcement, no backlash when changing direction, repeatability: ± 0,1 mm.

Forces and torques

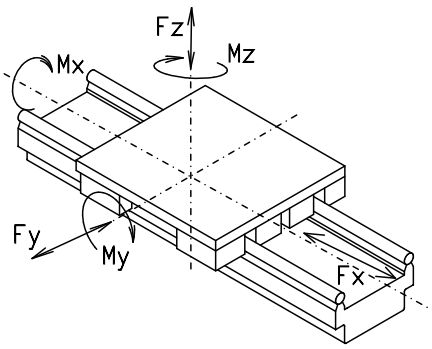

Size	ALLZ 203		ALLZ 204	
Forces/Torques	static	dynamic	static	dynamic
F_x (N)	-	5610	-	5610
F_y (N)	23000	18400	30000	24000
F_z (N)	11000	8800	16200	13000
M_x (Nm)	1180	950	1870	1500
M_y (Nm)	1870	1500	3000	2400
M_z (Nm)	3800	3100	5600	4500
All forces and torques related to the following:				
existing values / table values	$\frac{Fy}{Fy_{dyn}} + \frac{Fz}{Fz_{dyn}} + \frac{Mx}{Mx_{dyn}} + \frac{My}{My_{dyn}} + \frac{Mz}{Mz_{dyn}} \leq 1$			
No-load torque				
Nm	4		4	
Speed				
(m/s) max	8		8	
Geometrical moments of inertia of aluminium profile				
I_x mm⁴	$2{,}26 \times 10^7$		$2{,}98 \times 10^7$	
I_y mm⁴	$8{,}75 \times 10^7$		$10{,}22 \times 10^7$	
Elastic modulus N/mm²	70000		70000	

For life-time calculation of rollers use our homepage.

Driving torque:

$$M_a = \frac{F * P * S_i}{2000 * \pi} + M_n$$

$$P_a = \frac{M_a * n}{9550}$$

F	= force	(N)
P	= pulley action perimeter	(mm)
Si	= safety factor 1,2 … 2	
M_n	= no-load torque	(Nm)
n	= rpm pulley	(min^{-1})
M_a	= driving torque	(Nm)
P_a	= motor power	(KW)

Deflection:

$$f = \frac{F * L^3}{E * I * 192}$$

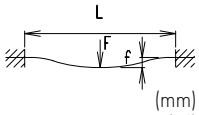

f	= deflection	(mm)
F	= load	(N)
L	= free length	(mm)
E	= elastic modulus 70000	(N/mm²)
I	= second moment of area	(mm⁴)

BAHR Modultechnik

Linear system **ALLZ 203, 204**

Dimensions (mm)

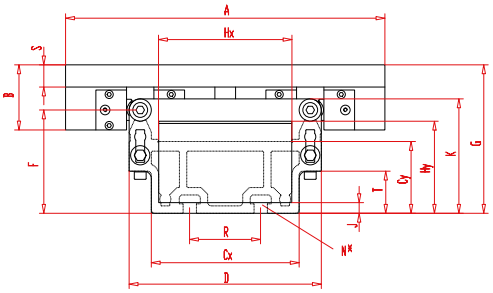

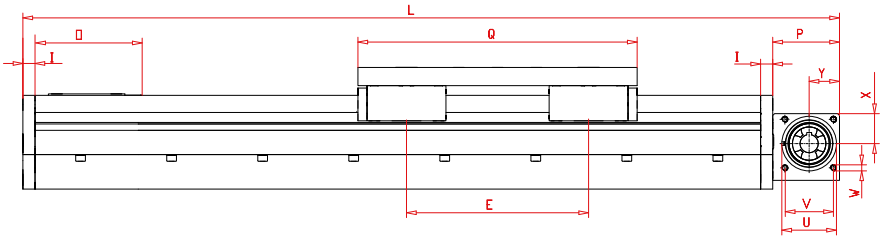

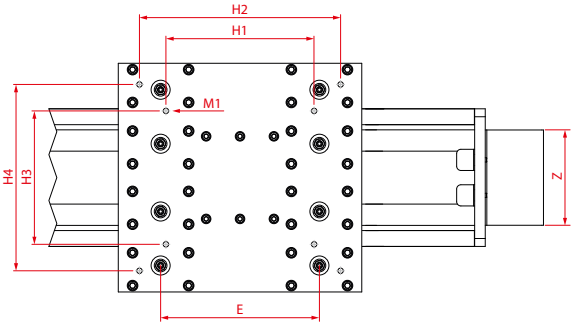

Increasing the carriage length will increase the basic length by the same amount.

Size	Basic length L	A	B	Cx	Cy	D	F	G	Hx	Hy	I	J	K	N for	O	P	R	S	T	U -0,05	V	W	X	Y	Z	Basic weight	Weight per 100 mm
ALLZ 203	798	432	88	200	97	260	139,6	200,5	180,5	124,5	20	14,5	154,5	M16	182	110	96	30	57	90	80	10	49,5	50	180	90 kg	4,0 kg
ALLZ 204	822	460	80	200	97	270	139,6	199	180,5	124,5	20	14,5	165	M16	182	110	96	30	57	90	80	10	49,5	50	180	92 kg	4,9 kg

Carriage	E	Q	H1	H2	H3	H4	M1
ALLZ 203	300	460	280	380	252	352	M12
ALLZ 204	355	490	---	---	---	---	M12

3 **Guide rod size:**
(3) Ø=30 **(4)** Ø=40

0 **Choice of guide body profile:**
(0) Standard **(2)** corrosion-protected guide rods and screws
(4) expanded corrosion-protected version (depending on the availability of components)

0 **Drive version:**

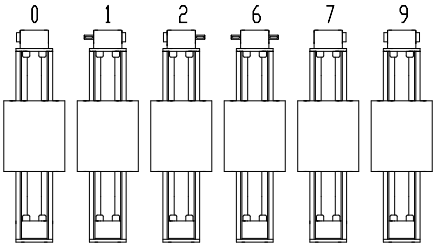

9 is as 0, but with coupling claws on both sides.

Coupling claw on one side

Standard shaft

The standard version is supplied without shaft. A shaft can be retrofitted by inserting it into the pulley bore and securing it with 2 locking rings.

Belt table:

Code No.		Belt	mm/rev.	Number of teeth
0	7	8M100	224	28

Shaft dimensions / Coupling claw:

Size	Shaft ø h6 x length	Key	Coupling
203	30 x 55	8x7x50	24
204	30 x 55	8x7x50	24

ALLZ 20	3	0	0	0	0	0	7	0	2000
Pos.		1	2	3	4	5	6	7	

Basic length + stroke = total length

Sample ordering code:
ALLZ203, guide rods 30 mm, standard body profile, coupling claw on both side, toothed belt 8M100, 1208 mm stroke.

BAHR Modultechnik
EDELSTAHL Rost frei
TÜV NORD
AEO

Linear system **ALLZQ 203**

RACK AND PINION DRIVE

- ROLLER GUIDE
- HEAVY LOAD
- LIFTING SYSTEM
- HIGH LOAD CAPACITY

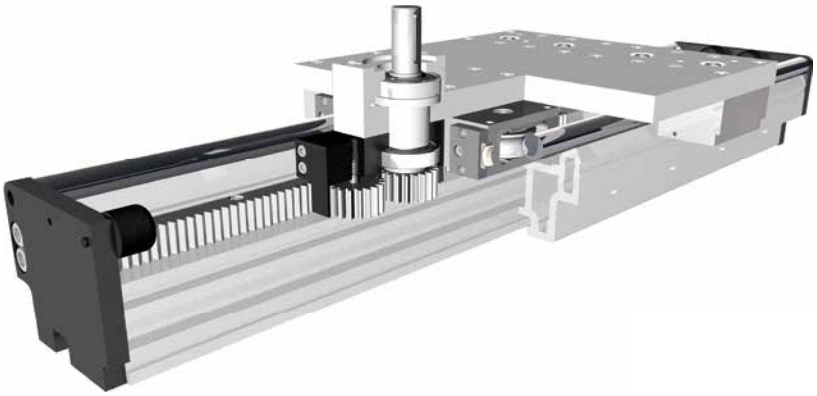

Function:
This unit consists of an aluminium profile with hardened steel guide rods mounted on top of the profile. The carriage, which has internal linear ball bearings that can be adjusted free of play, is driven along the guide rods by a high precision rack. The rack and pinion system is suitable for highly dynamic servo operation and ideal for lifting movements. The pinion has maintenance-free ball bearings. The rack is lubricated by a toothed felt wheel.

Fitting position: As required. Max. length 5.000 mm without joints.
Carriage mounting: By tapped holes.
Unit mounting: By T-slots and mounting sets. The linear axis can be combined with any T-slot profile.
Carriage support: In the standard version, the carriage runs on 8 rollers which can be adjusted and serviced at a central servicing position. For longer carriages the number of rollers can be increased. Repeatability ± 0,1.
Rack: 8e27 hardened and ground. Repeatability: ± 0,1 mm.

Forces and torques

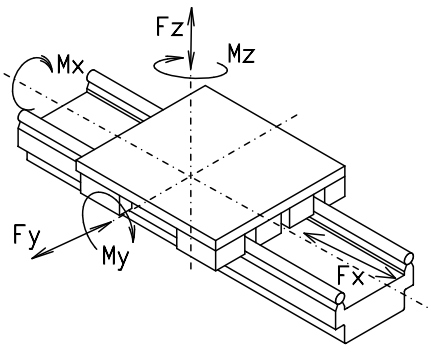

Size	ALLZQ 203
Forces/Torques	
F_x (N)	4610
F_y (N)	8700
F_z (N)	8300
M_x (Nm)	1050
M_y (Nm)	1240
M_z (Nm)	2600
All forces and torques related to the following:	
existing values / table values	$\frac{Fy}{Fy_{dyn}} + \frac{Fz}{Fz_{dyn}} + \frac{Mx}{Mx_{dyn}} + \frac{My}{My_{dyn}} + \frac{Mz}{Mz_{dyn}} \leq 1$
No-load torque	
Nm	3
Driving Tourque	
N	154
Geometrical moments of inertia of aluminium profile	
I_x mm^4	2,26x10^7
I_y mm^4	8,75x10^7
Elastic modulus N/mm^2	70000

For life-time calculation of rollers use our homepage.

Driving torque:

$$M_a = \frac{F * P * S_i}{2000 * \pi} + M_n$$

$$P_a = \frac{M_a * n}{9550}$$

F	= force	(N)
P	= pulley action perimeter	(mm)
Si	= safety factor 1,2 … 2	
M_n	= no-load torque	(Nm)
n	= rpm pulley	(min^{-1})
M_a	= driving torque	(Nm)
P_a	= motor power	(KW)

Deflection:

$$f = \frac{F * L^3}{E * I * 192}$$

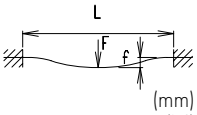

f	= deflection	(mm)
F	= load	(N)
L	= free length	(mm)
E	= elastic modulus 70000	(N/mm^2)
I	= second moment of area	(mm^4)

BAHR Modultechnik
EDELSTAHL Rost frei
TÜV NORD
AEO

Linear system **ALLZQ 203**

Dimensions (mm)

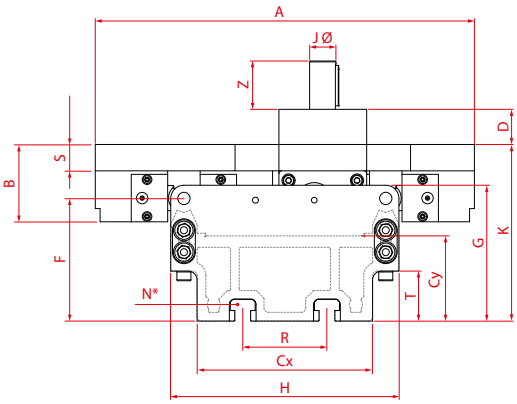

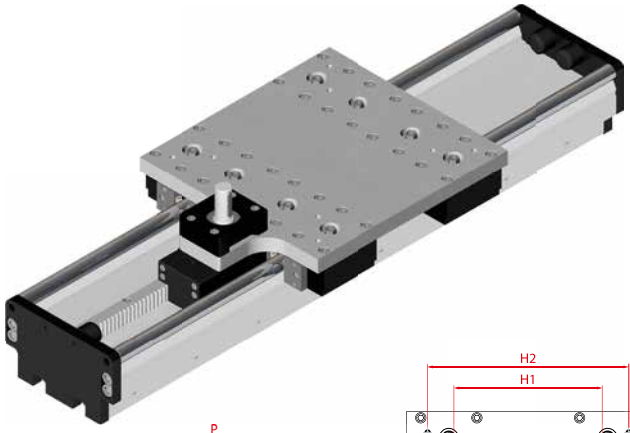

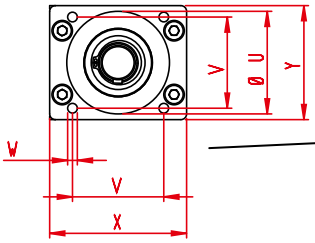

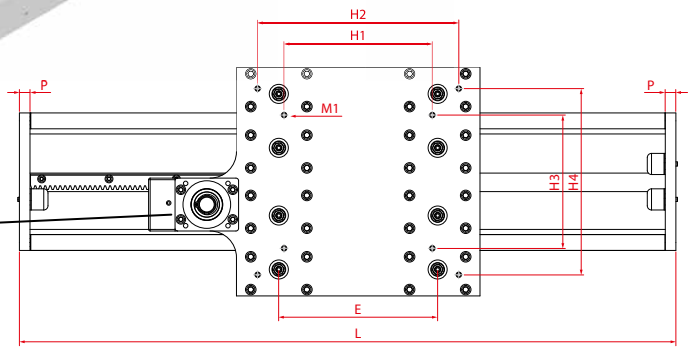

Increasing the carriage length will increase the basic length by the same amount.

Size	Basic length L	A	B	Cx	Cy	D	E	F	G	H	J Ø	K	N for	P	R	S	T	U ±0,05	V	W for	X	Y	Z	Basic weight	Weight per 100 mm
ALLZQ 203	670	432	88	200	97	40	300	139,6	154,6	260	30	200,6	M16	20	96	30	57	90	80	M10	120	100	55	77,6 kg	4,9 kg

Carriage	E	H1	H2	H3	H4	M1
Version (0) & (1)	300	280	380	252	352	M12
Version (2) & (3)	355	330	430	252	352	M12

3 **Guide rod size:**
(3) Ø=30

0 **Choice of guide body profile:**
(0) Standard **(2)** corrosion-protected guide rods and screws
(4) expanded corrosion-protected version (depending on the availability of components)

0 **Drive version:**

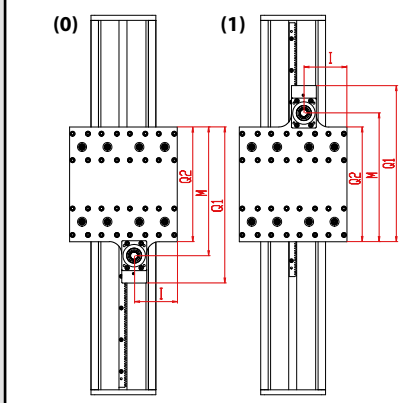

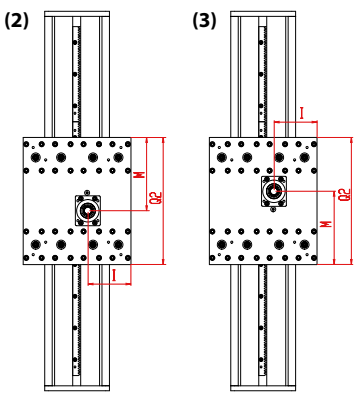

Size	Version (0) & (1) I	M	Q1	Q2	L	Version (2) & (3) I	M	Q2	L
203	172,75	516	626	460	670	172,75	294	510	560

Rack and pinion accuracy

Code No.	Modul	Quality	Rack accuracy	Material	Marks
0	3	10	0,091 mm/300 mm	C45	Hardened teeth
1	3	9	0,065 mm/300 mm	C45	Milled teeth
2	3	8	0,046 mm/300 mm	X8CrNiS18-9	Milled teeth

Shaft dimensions			
Shaft ø h6 x length	Key	Pinion	
		mm/U	Modul
30 x 55	8x7x50	197,92	3

ALLZQ 20	3	0	0	0	0	0	0	0	2000
Pos.		1	2	3	4	5	6	7	

Basic length + stroke = total length

Sample ordering code:
ALLZQ203, guide rods 30 mm, standard body profile, coupling position 0, rack accuracy 0,091 mm/300 mm, 1330 mm stroke.

Linear system **ALLR 203, 204**

ROLLER GUIDE UNIT WITHOUT DRIVE

- ROLLER GUIDE
- HEAVY LOAD
- HIGH LOAD CAPACITY

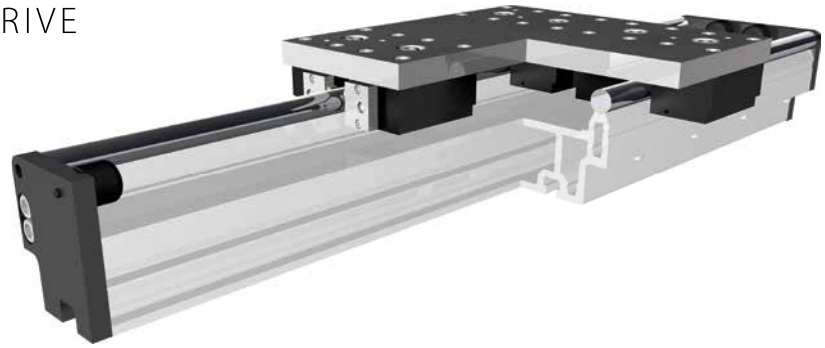

Function:
This unit consists of an aluminium profile with hardened steel spindles mounted on top of the profile. The carriage has internal linear ball bearings that can be adjusted free of play. The unit is without drive.

Fitting position: As required. Max. length 5.000 mm without joints.
Carriage mounting: By tapped holes.
Unit mounting: By T-slots and mounting sets. The linear axis can be combined with any T-slot profile.
Carriage support: In the standard version, the carriage runs on 8 rollers which can be adjusted and serviced at a central servicing position. For longer carriages the number of rollers can be increased.

Forces and torques

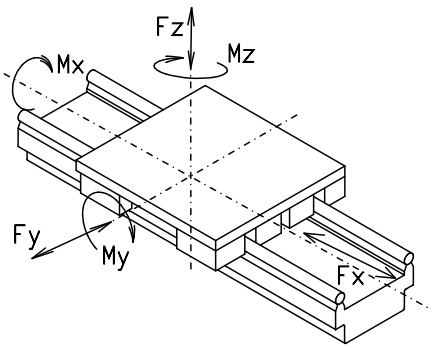

Size	ALLR 203		ALLR 204	
Forces/Torques	static	dynamic	static	dynamic
F_y (N)	23000	18400	30000	24000
F_z (N)	11000	8800	16250	13000
M_x (Nm)	1200	950	1870	1500
M_y (Nm)	1870	1500	3000	2400
M_z (Nm)	3800	3100	5600	4500

All forces and torques related to the following:

existing values / table values

$$\frac{Fy}{Fy_{dyn}} + \frac{Fz}{Fz_{dyn}} + \frac{Mx}{Mx_{dyn}} + \frac{My}{My_{dyn}} + \frac{Mz}{Mz_{dyn}} \leq 1$$

Geometrical moments of inertia of aluminium profile		
I_x mm^4	2,26 x 10 ^{7}	2,98 x 10 ^{7}
I_y mm^4	8,75 x 10 ^{7}	10,22 x 10 ^{7}
Elastic modulus N/mm^2	70000	70000

For life-time calculation of rollers use our homepage.

Deflection:

$$f = \frac{F * L^3}{E * I * 192}$$

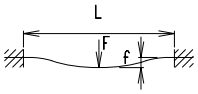

f = deflection (mm)
F = load (N)
L = free length (mm)
E = elastic modulus 70000 (N/mm²)
I = second moment of area (mm⁴)

Linear system **ALLR 203, 204**

Dimensions (mm)

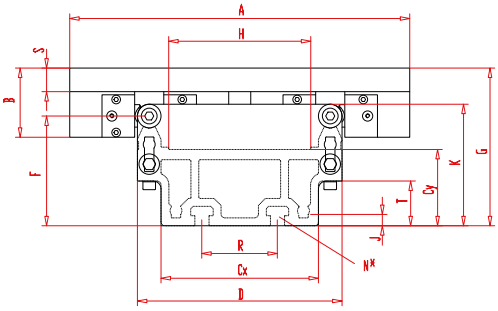

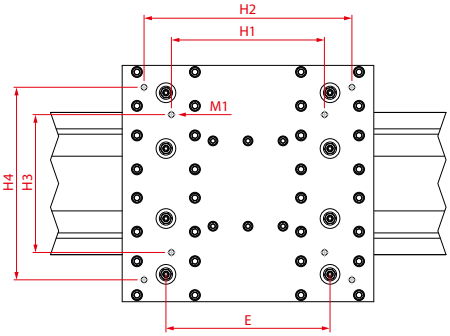

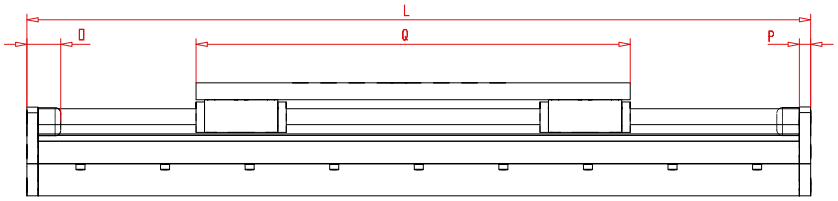

Increasing the carriage length will increase the basic length by the same amount.

Size	Basic length L	A	B	Cx	Cy	D	F	G	H	K	N for	O	P	R	S	T	Basic weight	Weight per 100 mm
ALLR 203	540	432	88	200	97	260	139,6	200,5	180,5	154,5	M16	60	20	96	30	57	64 kg	3,9 kg
ALLR 204	610	460	80	200	97	270	139,6	199	180,5	165	M16	60	20	96	30	57	65 kg	4,8 kg

Carriage	E	Q	H1	H2	H3	H4	M1
ALLR 203	300	460	280	380	252	352	M12
ALLR 204	355	490	---	---	---	---	M12

3 **Guide rod size**
(3) Ø=30 **(4)** Ø=40

0 **Choice of guide body profile:**
(0) Standard **(2)** corrosion-protected guide rods and screws
(4) expanded corrosion-protected version (depending on the availability of components)

ALLR20	3	0	0	0	0	0	0	0	2000
Pos.		1	2	3	4	5	6	7	

Basic length + stroke = total length

Sample ordering code:
ALLR203, guide rods 30 mm, standard body profile, 1420 mm stroke.

Example of application

Spare parts

Spare parts

Complete carriage EG

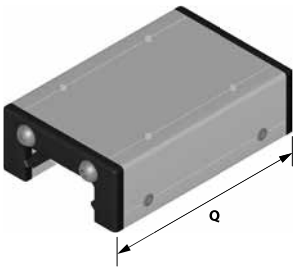

Additional complete carriage with V-slides and end plates.

Code-No.	Type	Q Standard	Q max.
04532	EG 30	82	1000
04542	EG 40	117	1000
04562	EG 60	165	1000
04582	EG 80	193	1000

Complete carriage EL/ML

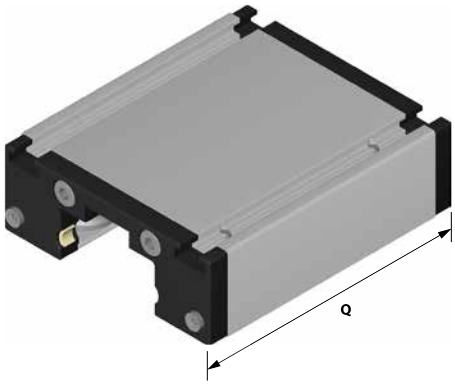

Additional complete carriage with rollers, eccentrics and wiper end plates for free rolling.

	Code-No.	Type	Q Standard	Q max.
without Slider 2)	04531	EL 30	82	3000
	04541	EL 40	122	3000
	04561	EL/ML 60	168	3000
	04560	EL/ML 60S	194	3000
	04581	EL/ML 80	194	3000
	04580	EL/ML 80S	214	3000
	04511	EL/ML 100	300	2000
	04521	EL 125	365	2000

	Code-No.	Type	Q Standard	Q max.
with Slider 1)	045311	EL 30	82	3000
	045411	EL 40	122	3000
	045611	EL 60	168	3000
	045601	EL 60S	194	3000
	045811	EL 80	194	3000
	045801	EL 80S	214	3000
	045111	EL 100	300	2000
	045211	EL 125	365	2000

1) ELT/K, ELVZ, ELHZ
2) ELZ, ELZT, ELZU, ELZA, ELZQ, MLZ

Complete carriage UL

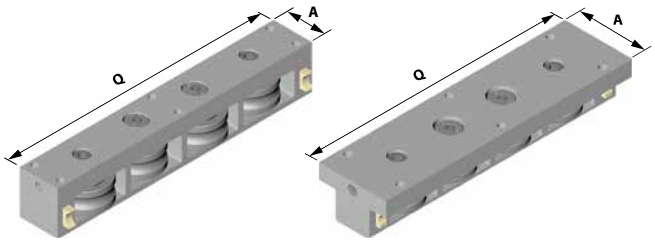

Carriage with rollers, eccentrics and end plates.

Code-No.	Type	A	Q
045471	UL 40	40	146
045472	UL 40	20	146
045671	UL 60	60	194
045672	UL 60	29	194
045871	UL 80	80	260
045872	UL 80	42	260

Complete carriage DL

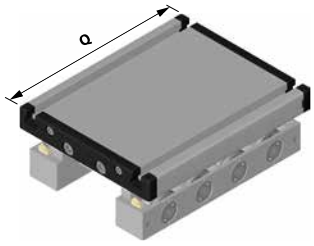

Standardcarriage with 2x4 rollers, eccentrics and end plates.
Different versions by inquiry.

Code-No.	Type	Q Standard	Q max.
04591	DL 120	156	3000
04590	DL 160	200	3000
04592	DL 200	270	3000

Complete carriage DS

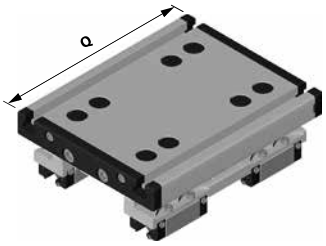

Carriage with four runner blocks and end plates.
Different versions by inquiry.

Code-No.	Type	Q Standard	Q max.
045700	DS 120	156	3000
045710	DS 160	200	3000
045720	DS 200	270	3000

Spare parts

Complete carriage DL_P

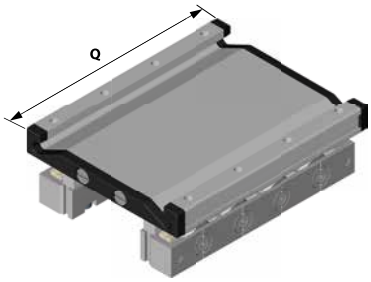

Additional complete carriage with rollers, eccentrics and wiper end plates for free rolling. Different versions by inquiry.

Code-Nr.	Typ	$Q_{Standard}$	$Q_{max.}$
045904	**DL 120 P**	152	3000
045905	**DL 160 P**	196	3000
045906	**DL 200 P**	260	3000

Complete carriage DS_P

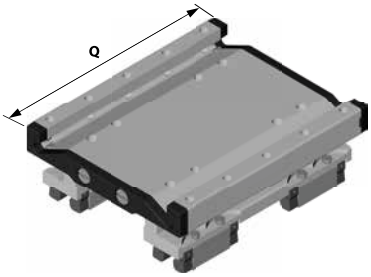

Carriage with four runner blocks and end plates.
Different versions by inquiry.

Code-Nr.	Typ	$Q_{Standard}$	$Q_{max.}$
045731	**DS 120 P**	152	3000
045733	**DS 160 P**	196	3000
045735	**DS 200 P**	248	3000

Carriage QL

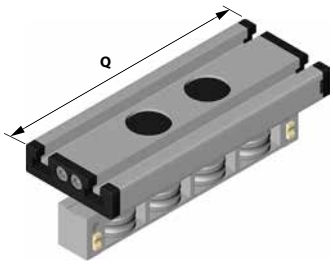

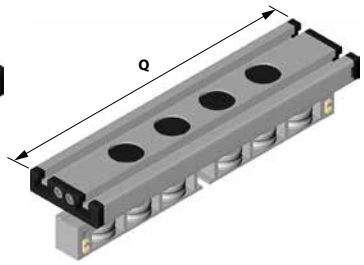

Carriage with rollers, eccentrics and end plates.
Different versions by inquiry.

Code-Nr.	Type	$Q_{Standard}$	Number of rollers
04593A	**QL 60**	152	4
04593B	**QL 60**	192	5
04593C	**QL 60**	232	2x2
04593D	**QL 60**	232	2x3
04594A	**QL 80**	196	4
04594B	**QL 80**	246	5
04594C	**QL 80**	296	2x2
04594D	**QL 80**	296	2x3
04595A	**QL 100**	260	4
04595B	**QL 100**	320	5
04595C	**QL 100**	388	2x2
04595D	**QL 100**	388	2x3

Carriage QS

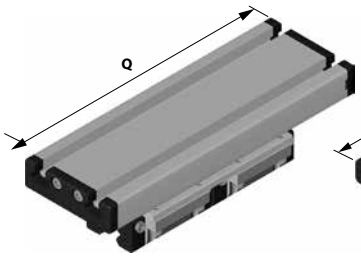

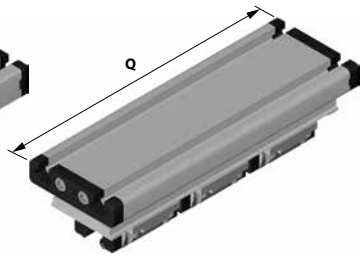

Carriage with 2 runner blocks and end plates.
Different versions by inquiry.

Code-Nr.	Type	$Q_{Standard}$	Number of Runnerblocks
045970	**QS 60**	177	2
045973	**QS 60**	242	3
045980	**QS 80**	232	2
045983	**QS 80**	312	3
045990	**QS 100**	268	2
045993	**QS 100**	362	3
04550	**QS 125**	300	2
045502	**QS 125**	365	3

Carriage QST/K

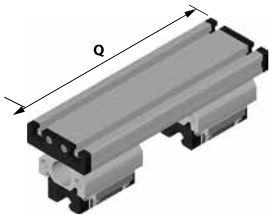

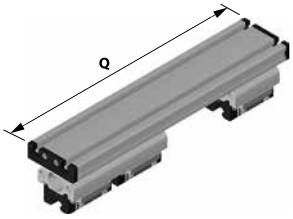

Carriage with 2 runner blocks and end plates without leading nut.
Different versions by inquiry.

Code-Nr.	Type	$Q_{Standard}$	$Q_{max.}$
045974	**QST/K 60**	188	3000
045984	**QST/K 80**	250	3000
045997	**QST/K 100**	288	3000

Carriage LLZ / LLR

LLZ

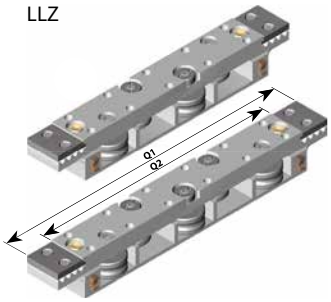

LLR

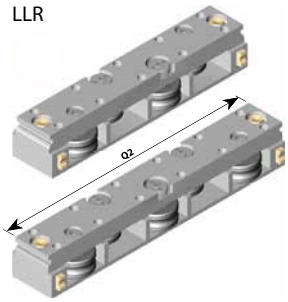

Carriage with 5 or 4 rollers.
Standard version: 5 rollers

Code-No.	Type		Q1	Q2
045740-5	**LLZ 40**	5 rollers	152	120
045760-5	**LLZ 60**	5 rollers	215	175
045780-5	**LLZ 80**	5 rollers	320	251
045740-4	**LLZ 40**	4 rollers	130	98
045760-4	**LLZ 60**	4 rollers	184	144
045780-4	**LLZ 80**	4 rollers	260	191

045741-5	**LLR 40**	5 rollers	--	120
045761-5	**LLR 60**	5 rollers	--	175
045781-5	**LLR 80**	5 rollers	--	251
045741-4	**LLR 40**	4 rollers	--	98
045761-4	**LLR 60**	4 rollers	--	144
045781-4	**LLR 80**	4 rollers	--	191

Carriage LSZ 60 / LSR 60

LSZ

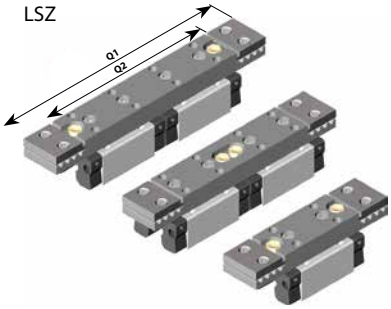

LSR

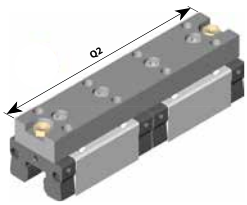

Carriage with 2 or 1 runner blocks.

Code-No.	Type	Runner blocks	Q1	Q2
045762-1	**LSZ 60**	2	160	116
045762-2	**LSZ 60**	2	140	96
045762-3	**LSZ 60**	1	100	56
045782-1	**LSZ 80**	2	219	149
045782-2	**LSZ 80**	2	204	134
045782-3	**LSZ 80**	1	146,5	76,5

045763-1	**LSR 60**	2	--	116
045763-2	**LSR 60**	2	--	96
045763-3	**LSR 60**	1	--	56
045783-1	**LSR 80**	2	--	149
045783-2	**LSR 80**	2	--	134
045783-3	**LSR 80**	1	--	76,5

Carriage complete GG / GDG

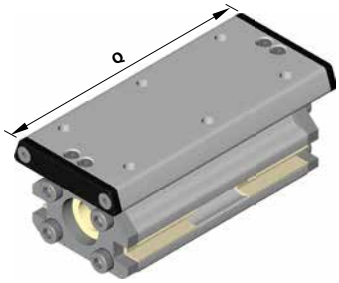

Complete carriage with slides and end plates.

Code-No.	Type	$Q_{Standard}$	$Q_{max.}$
045825	**GG / GDG 90**	170	400

Spare parts

V-slide EG

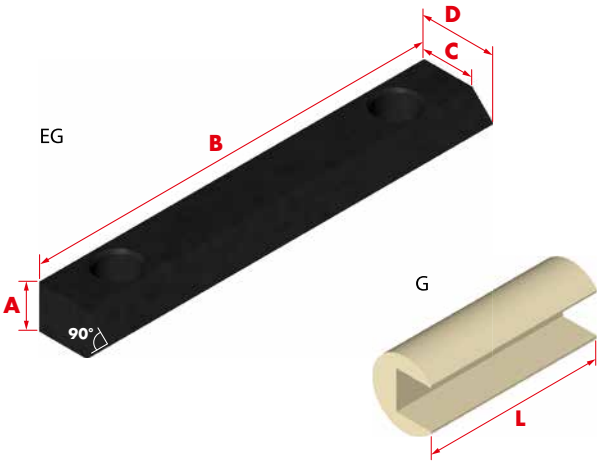

Made of low-wear plastic with good sliding characteristics.
2 pieces per carriage.

Code-No.	Type	A	$B_{max.}$	C	D
04233	**30**	9,3	1.000	-	17,6
04243	**40**	8	1.000	9	13
04263	**60**	10	1.000	16	21
04283	**80**	14	1.000	22	29

Made of low-wear plastic with good sliding characteristics.
4 pieces per carriage.

Code-No.	Type	L
042835	**G 90**	45

Carriage roller

Standard roller. Stainless steel upon request.

Code-Nr.	Type	Name
04000	**EL 30 / LL 40**	LFR 687-2Z
04001	**EL 40 / DL 120 / QL 60 LL 60**	LFR 608-2Z
04002	**EL/ML 60 / DL 160 / QL 80**	LR 10
04039	**EL/ML 60S / DL 200 / QL 100 LL 80**	LFR 5302-2Z
04003	**EL/ML 80**	LR 12
04038	**EL/ML 80S**	LFR 5202-12-2RS
04004	**EL/ML 100**	LFR 5204-16-2RS
04009	**EL 125**	LFR 5206-20-2Z

Carriage roller block DL / QL

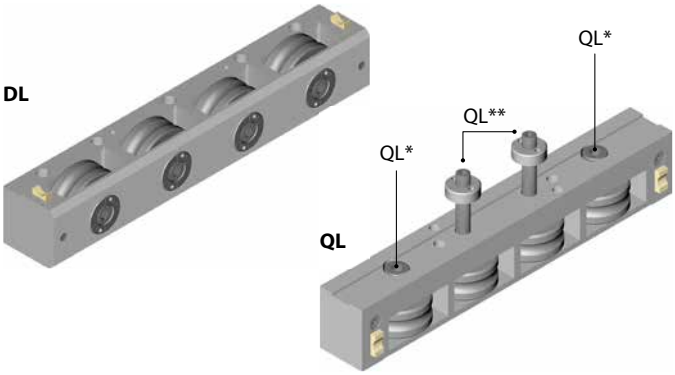

Made of aluminium, complete with rollers, eccentric and screws.

Code-No.	Type	Standard	By inqury
04100	**DL 120**	4 rollers	3; 5; 2x3 rollers
04110	**DL 160**	4 rollers	3; 5; 2x3 rollers
04115	**DL 200**	4 rollers	3; 5; 2x3 rollers
04116	**QL 60**	4 rollers	5; 2x2; 2x3 rollers
04117	**QL 80**	4 rollers	5; 2x2; 2x3 rollers
04119	**QL 100**	4 rollers	5; 2x2; 2x3 rollers

* for outside fixed roller
** for inner movable roller

Runner block for DS / QS / LS

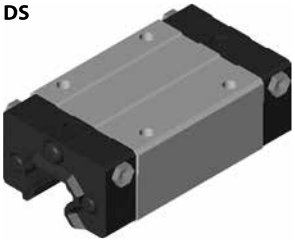

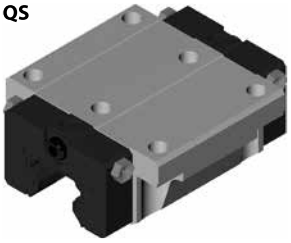

Code-No.	Type
04150	**QS 60**
04152	**QS 80**
04154	**QS 100**
04155	**QS 125**
04156	**DS 120**
04157	**DS 160 / LS 60**
04158	**DS 200**
04159	**LS 80**
04160	**LS 100**

Eccentric EL/ML

40, 60

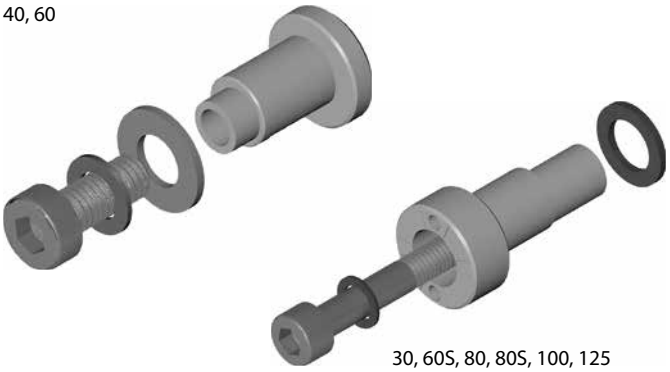

30, 60S, 80, 80S, 100, 125

Eccentric made of stainless steel with mounting accessories, screw, shims and safety washer.

Code-No.	Type	For roller
04050	**EL 30**	LFR 687-2Z
04051	**EL 40**	LFR 608-2Z
04052	**EL/ML 60**	LFR 5201-2Z
040521	**EL/ML 60S**	LFR 5302-2Z
04053	**EL/ML 80**	LFR 5201-12-2Z
04049	**EL/ML 80S**	LFR 5202-12-2RS
04054	**EL 100**	LFR 5204-16-2RS
04055	**EL 125**	LFR 5206-20-2Z

Eccentric DL / QL / LL

QL **

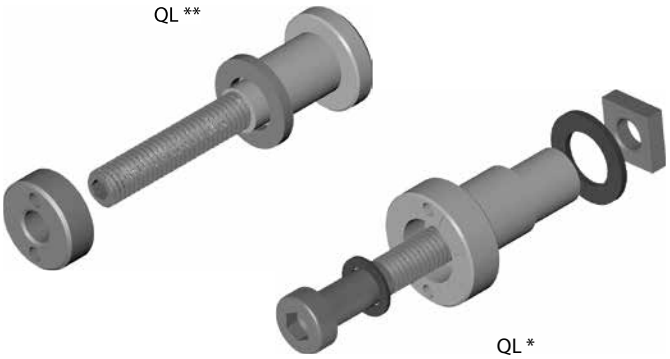

QL *

DL

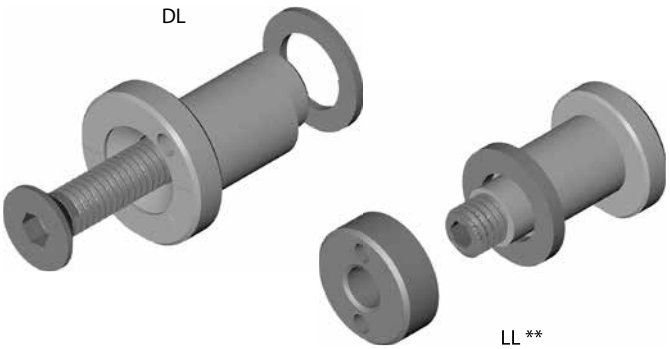

LL **

Eccentric made of stainless steel with mounting set, screw, shims and safety washer. The front side has an embossed marking to enable uniformly adjustment of rollers.

Code-No.	Type	For roller
04057	**DL 120**	LFR 608-2Z
04058	**DL 160**	LFR 5201-2Z
04059	**DL 200**	LR 5302-2Z
06060	**QL 60***	LFR 608-2Z
06061	**QL 60****	LFR 608-2Z
06080	**QL 80***	LFR 5201-2Z
06081	**QL 80****	LFR 5201-2Z
06010	**QL 100 / LL 80***	LR 5302-2Z
06011	**QL 100 / LL 80****	LR 5302-2Z
06064	**LL 40**	LFR 687-2Z
06060	**LL 60***	LFR 608-2Z
06065	**LL 60****	LFR 608-2Z

* for outside fixed roller
** for inner movable roller
For arrangement of the different rollers see „carriage roller block“ above.

Wiper end plate DL /DS - QL / QS

DL | DS

DL_P | DS_P

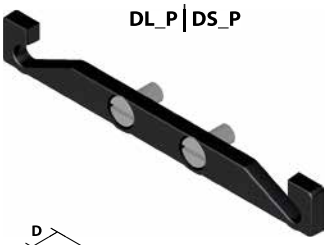

DLT/K | DST/K

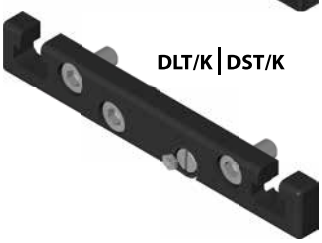

QL | QS

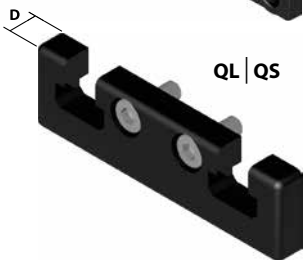

Code-No.	Type	D	Material
04211	**DL/DS 120**	8	ABS
04212	**DL/DS 160**	10	ABS
04213	**DL/DS 200**	15	ABS
042111	**DLT/K / DST/K 120**	8	ABS
042121	**DLT/K / DST/K 160**	10	ABS
042131	**DLT/K / DST/K 200**	15	ABS
042110	**DL_P/DS_P 120**	6	ABS
042120	**DL_P/DS_P 160**	8	ABS
042130	**DL_P/DS_P 200**	8	ABS
04267	**QL/QS 60**	6	ABS
04287	**QL/QS 80**	8	ABS
04217	**QL/QS 100**	10	ABS
04218	**QL/QS 125**	15	PC

Spare parts

Tool for eccentric adjustment

Fix tool			Adjust tool	
Type	Code-No.	Dimension	Code-No.	Dimension
EL 30	09019	T 10	09030	LK 9,5 ø 1,3
EL 30	09020	SW 2	09030	LK 9,5 ø 1,3
EL 40	09021	SW 4	09022	SW 5
EL 60	09022	SW 5	09023	SW 6
EL 60S	09023	SW 6	09036	LK 20 ø 2
EL 80	09022	SW 5	09031	LK 15 ø 2
EL 80S	09023	SW 6	09036	LK 20 ø 2
EL 100	09023	SW 6	09032	LK 24 ø 3
EL 125	09024	SW 8	09033	LK 32 ø 4

Fix tool			Adjust tool	
Type	Code-No.	Dimension	Code-No.	Dimension
DL 120	09025	SW 3	09034	LK 10,5 ø 1,3
DL 160	09021	SW 4	09031	LK 15 ø 2
DL 200	09023	SW 6	09036	LK 20 ø 2
LL 60	09038	LK 8 ø 1,5	09026	SW 2,5
QL 60	09021	SW 4	09022	SW 5
QL 80	09037	LK 10 ø 2	09025	SW 3
	09022	SW 5	09023	SW 6
LL 80	09035	LK 13 ø 2,5	09021	SW 4
QL 100	09023	SW 6	09036	LK 20 ø 2

End plates EG

Material ABS.

without slider		
Code-No.	Type	A
04241	EG 40	5
04261	EG 60	6
04281	EG 80	6

with slider		
Code-No.	Type	A
04246	EG 40	5
04266	EG 60	6
04286	EG 80	6

with slider and output for grease nipple		
Code-No.	Type	A
042661	EG 60	6
042861	EG 80	6

Wiper end plate complete for EL/ML

Material ABS.

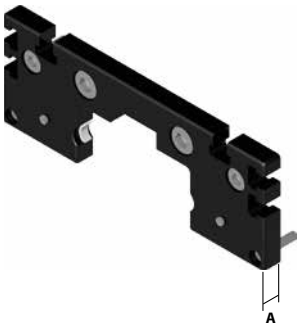

without slider [1]		
Code-Nr.	Type	A
04230	EL 30	6
04240	EL 40	11
04260	EL/ML 60	12
04268	EL/ML 60S	12
04280	EL/ML 80	12
04288	EL/ML 80S	12
04210	EL/ML 100	15
04220	EL 125	15

with slider [2]		
Code-Nr.	Type	A
04234	EL 30	6
04244	EL 40	11
04264	EL 60	12
04269	EL 60S	12
04284	EL 80	12
04289	EL 80S	12
04214	EL100	15
04224	EL125	15

with slider and output for grease nipple [3]		
Code-Nr.	Type	A
042641	EL 60	12
042691	EL 60S	12
042841	EL 80	12
042891	EL 80S	12
042141	EL 100	15
042241	EL 125	15

1) ELZ, ELZT, ELZU, ELZA, ELZQ, MLZ 2) ELT/K, ELVZ, ELHZ 3) ELT/K

Slider

When changing the cover band, it is necessary to replace the slide.

ELT / ELK	
Code-No.	Type
03132	30
03142	40
03162	60

DLT/K - DST/K	
Code-No.	Type
03164	120
03184	160
03114	200

QST/K	
Code-No.	Type
03165	60
03185	80
03115	100

Cover band

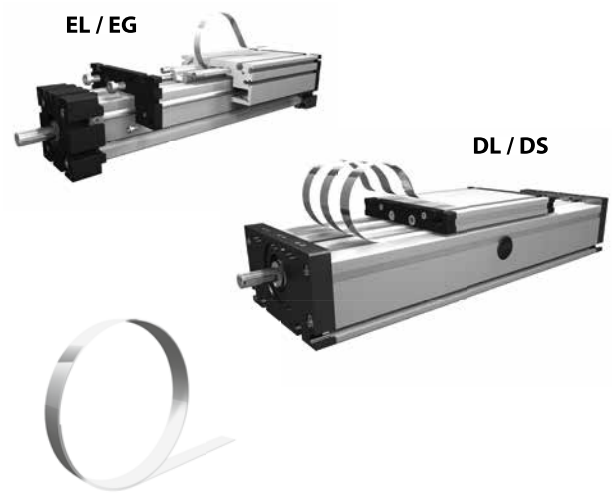

Spring steel (stainless steel)

Code-No.	Type	A x B
01020....	EL/EG 30	8 x 0,15
01021....	EL/EG 40/60/80 DL/DS 120	13,5 x 0,3
01026....	DL/DS 160	17,3 x 0,3
01022....	EL 100/125 DL/DS 200	22 x 0,3
01023	QST/K 60	24 x 0,3
01024	QST/K 80	32,3 x 0,3
01025	QST/K 100	38,5 x 0,3

Code-No.	length in mm
01026	2300

Sample ordering code:
Cover band 17,3 x 0,3 2.300 mm long.

Cover band PU GG | GD

Suitable for temperature ranges from -35 to +80°C

Code-No.	Material	Type
01037	PAS-PU 92A-H	GG, GD 90

Plastic cover strip QS

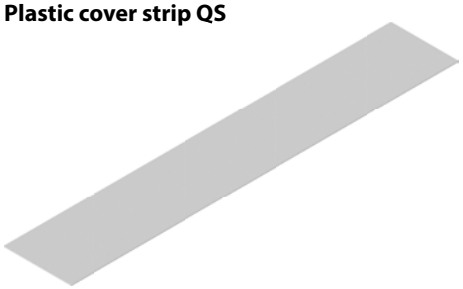

Code-No.	Type	Material	Length	for carriage
01033	QSK 60	Mylar A 500	146	Q = 177
01034	QSK 80	Mylar A 500	212	Q = 250
01035	QSK 100	Mylar A 500	220	Q = 288

Jointing plate for closed carriage

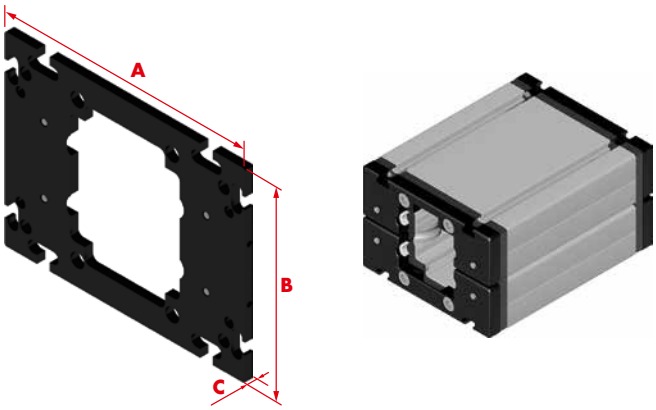

Aluminium plate with connection bores.

Code-No	Type	A	B	C
03045	EG 40	70	70	8
03065	EG 60	100	98	8
03085	EG 80	140	140	8
03036	EL 30	70	52	6
03046	EL 40	100	70	8
03066	EL/ML 60	144	98	8
03067	EL/ML 60S	170	106	10
03086	EL/ML 80	170	140	8
03087	EL/ML 80S	190	142	10
03016	EL 100	230	180	8
03026	EL 125	295	215	12

Spare parts

Guide rod

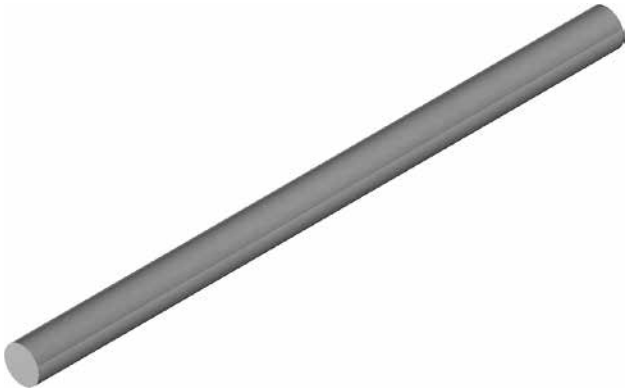

Code-No.	Type	Ø	Material	Hardness
04131....	**EL/EG 30 LL 40**	5 h6	Cf 53	HRC 62
04132....	**EL/EG 30 LL 40**	5 h6	x 90 CrMoV18	HRC 56
04141....	**EL 40 / DL 120 LL 60 QL 60**	6 h6	Cf 53	HRC 62
04142....	**EL 40 / DL 120 LL 60 QL 60**	6 h6	x 90 CrMoV18	HRC 56
04161....	**EL 60 (S) DL 160/200 LL 80 QL 80/100**	10 h6	Cf 53	HRC 62
04162....	**EL 60 (S) DL 160/200 QL 80/100**	10 h6	x 90 CrMoV18	HRC 56
04181....	**EL 80 (S)**	12 h6	Cf 53	HRC 62
04182....	**EL 80 (S)**	12 h6	x 90 CrMoV18	HRC 56
04111....	**EL 100**	16 h6	Cf 53	HRC 62
04112....	**EL 100**	16 h6	x 90 CrMoV18	HRC 56
04113....	**EL 125**	20 h6	Cf 53	HRC 62
04114....	**EL 125**	20 h6	x 90 CrMoV18	HRC 56

Code-No.	length in mm
04131	2000

Sample ordering code:
Guiding rod steel ø 5 2.000 mm long.

Guide rail

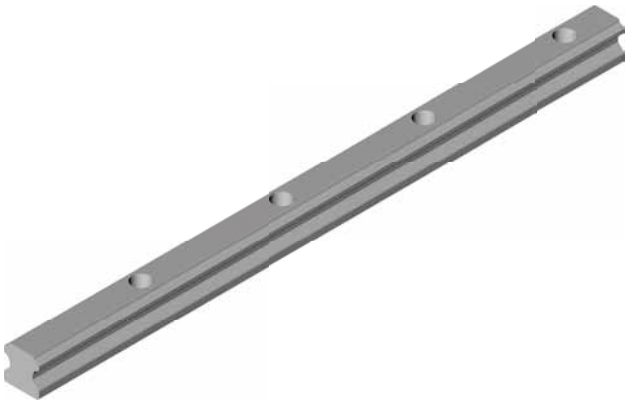

Code-No.	Type	Size
04147-2	**Q 60**	15
04148-2	**Q 80**	20
04149-2	**Q 100**	25
04160-2	**Q 125**	30
04156-2	**D 120**	12
04157-2	**D 160**	15
04158-2	**D 200**	25
04147-2	**L 60**	15
04148-2	**L 80**	20

Code-No.	length in mm
04146-2	2000

Sample ordering code:
Guide rail 2.000 mm long.

Spare parts

Trapezoidal spindle

Code-No.	Type	Pitch	Unit length $L_{max.}$
04609....	**EL/EG 30**	10x03 R	1.500 mm
04629....	**EL/EG 30**	10x03 L	1.500 mm
04600....	**EL/EG 40**	18x0	3.000 mm
04620....	**EL/EG 40**	18x04 L	3.000 mm
04640....	**DL/DS 120 / QS 60**	18x04 R	3.000 mm
04650....	**DL/DS 120 / QS 60**	18x04 L	3.000 mm
04601....	**EL/EG 40**	18x08 R	3.000 mm
04621....	**EL/EG 40**	18x08 L	3.000 mm
04641....	**DL/DS 120 / QS 60**	18x08 R	3.000 mm
04651....	**DL/DS 120 / QS 60**	18x08 L	3.000 mm
04602....	**EL/EG 60**	24x05 R	3.000 mm
04622....	**EL/EG 60**	24x05 L	3.000 mm
04642....	**DL/DS 160 / QS 80**	24x05 R	3.000 mm
04652....	**DL/DS 160 / QS 80**	24x05 L	3.000 mm
04603....	**EL/EG 60**	24x10 R	3.000 mm

Code-No.	Type	Pitch	Unit length $L_{max.}$
04623....	**EL/EG 60**	24x10 L	3.000 mm
04643....	**DL/DS 160 / QS 80**	24x10 R	3.000 mm
04643....	**DL/DS 160 / QS 80**	24x10 L	3.000 mm
04604....	**EL/EG 80(S)**	28x05 R	3.000 mm
04624....	**EL/EG 80(S)**	28x05 L	3.000 mm
04605....	**EL/EG 80(S)**	28x10 R	3.000 mm
04625....	**EL/EG 80(S)**	28x10 L	3.000 mm
04606....	**EL / QS 100 DL/DS 200**	32x06 R	4.500 mm
04626....	**EL / QS 100 DL/DS 200**	32x06 L	3.000 mm
04607....	**EL / QS 100 DL/DS 200**	32x12 R	3.000 mm
04627....	**EL / QS 100 DL/DS 200**	32x12 L	3.000 mm
04630....	**EL 125**	40x07 R	4.000 mm
04631....	**EL 125**	40x07 L	3.000 mm
04632....	**EL 125**	40x14 R	3.000 mm
04633....	**EL 125**	40x14 L	3.000 mm

Code-No.	unit length in mm
04603	1000

Sample ordering code:
Trapezoidal spindle Tr 24x10 right, unit length 1000 mm.

Trapezoidal screw made of RG 7

Code-No.	Type	Pitch
04332	**EL/EG 30**	10x03 R
04333	**EL/EG 30**	10x03 L
04340	**EL/EG 40 / DL/DS 120 / QS 60**	18x04 R
04341	**EL/EG 40 / DL/DS 120 / QS 60**	18x04 L
04342	**EL/EG 40 / DL/DS 120 / QS 60**	18x08 R
04343	**EL/EG 40 / DL/DS 120 / QS 60**	18x08 L
04360	**EL/EG 60 / DL/DS 160 / QS 80**	24x05 R
04361	**EL/EG 60 / DL/DS 160 / QS 80**	24x05 L
04362	**EL/EG 60 / DL/DS 160 / QS 80**	24x10 R
04363	**EL/EG 60 / DL/DS 160 / QS 80**	24x10 L
04380	**EL/EG 80(S)**	28x05 R

Code-No.	Type	Pitch
04381	**EL/EG 80(S)**	28x05 L
04382	**EL/EG 80(S)**	28x10 R
04383	**EL/EG 80(S)**	28x10 L
04310	**EL / QS 100 / DL/DS 200**	32x06 R
04311	**EL / QS 100 / DL/DS 200**	32x06 L
04312	**EL / QS 100 / DL/DS 200**	32x12 R
04313	**EL / QS 100 / DL/DS 200**	32x12 L
04320	**EL 125**	40x07 R
04321	**EL 125**	40x07 L
04322	**EL 125**	40x14 R
04323	**EL 125**	40x14 L

Spare parts

Ballscrew spindle

Code-No.	Type	Pitch	Unit length L max
04610....	EL/EG 30	Kg 08x2,5 R	2.000 mm
04611....	EL/EG 40	Kg 16x05 R	3.000 mm
04612....	EL/EG 40	Kg 16x10 R	3.000 mm
04613....	EL/EG 60	Kg 20x20 R	3.000 mm
04614....	EL/EG 60	Kg 25x05 R	3.000 mm
04615....	EL/EG 60	Kg 25x10 R	3.000 mm
04631....	EL/EG 60	Kg 20x05 L	3.000 mm
04661....	DL/DS 120 / QS 60	Kg 16x05 R	3.000 mm
04662....	DL/DS 120 / QS 60	Kg 16x10 R	3.000 mm
04663....	DL/DS 120 / QS 80 DL/DS 160	Kg 20x20 R	3.000 mm
04667....	DL/DS 120 / QS 60	Kg 16x16 R	3.000 mm

Code-No.	Type	Pitch	Unit length L max
04664....	DL/DS 120 DL/DS 160 QS 80	25x05R	3.000 mm
04665....	DL/DS 120 DL/DS 160 QS 80	25x10 R	3.000 mm
04616....	EL/EG 80(S)	25x25 R	3.000 mm
04666....	DL/DS 120 DL/DS 160	25x25 R	3.000 mm
04617....	EL/EG 80(S) EL/QS 100 DL/DS 200	32x05 R	3.000 mm
04684....	EL/EG 80(S) EL/QS 100 DL/DS 200	32x05 L	3.000 mm
04618....	EL/EG 80(S) EL/QS 100 DL/DS 200	32x10 R	3.000 mm
04683....	EL 100 DL/DS 200	32x20 R	3.000 mm
04619....	EL 100 DL/DS 200	32x32 R	3.000 mm
04634....	EL 125	40x10 R	3.000 mm
04635....	EL 125	40x20 R	3.000 mm
04636....	EL 125	40x40 R	3.000 mm

Code-Nr.	unit length in mm
04617	1000

Sample ordering code:
Ballscrew spindle 32x05 right, unit length 1.000 mm.

Ballscrew nut

Code-No.	Type	Pitch	first greasing	re-greasing*
04430	EL/EG 30	Kg 08x2,5 R	0,02 g	0,01 g
04440	EL/EG 40 DL/DS 120 QS 60	Kg 16x05 R	4,0 g	1,3 g
04441	EL/EG 40 DL/DS 120 QS 60	Kg 16x10 R	2,5 g	0,8 g
04442	DL/DS 120 QS 60	Kg 16x16 R	2,0 g	0,6 g
04460	EL/EG 60 DL/DS 120 DL/DS 160 QS 80	Kg 25x05 R	6,0 g	2,0 g
04461	EL/EG 60 DL/DS 120 DL/DS 160 QS 80	Kg 25x10 R	8,0 g	2,6 g
04462	EL/EG 60 DL/DS 120 DL/DS 160 QS 80	Kg 20x20 R	8,0 g	2,6 g

Code-No.	Type	Pitch	first greasing	re-greasing*
04463	EL/EG 60	20x05 L	5,0 g	2,0 g
04464	EL/EG 80(S)	25x25 R	10,0 g	3,0 g
04464-1	DL/DS 160	25x25 R	10,0 g	3,0 g
04480	EL/EG 80(S) EL/QS 100 DL/DS 200	32x05 R	8,0 g	3,0 g
04485	EL/EG 80(S) EL/QS 100 DL/DS 200	32x05 L	8,0 g	3,0 g
04481	EL/EG 80(S) EL/QS 100 DL/DS 200	32x10 R	11,0 g	4,0 g
04483	EL 100 DL/DS 200	32x20 R	11,8 g	4,0 g
04482	EL 100 DL/DS 200	32x32 R	12,6 g	4,0 g
04420	EL 125	40x10 R	25,0 g	8,3 g
04421	EL 125	40x20 R	29,0 g	9,6 g
04422	EL 125	40x40 R	34,0 g	011,3 g

* after approx. 500 hours

Leading nut receiver

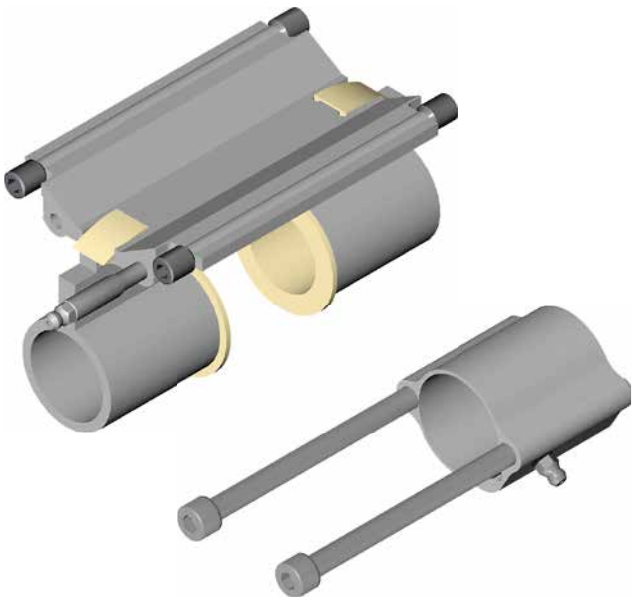

Ballscrew EL/EG

Code-No.	Type
03130	30
03140	40
03160	60(S)
03180	80(S)
03110	100
03120	125

Trapezoidal EL/EG

Code-No.	Type
03131	30
03141	40
03161	60(S)
03181	80(S)
03111	100
03121	125

Ballscrew DL/DS

Code-No.	Type
03163	120
03183	160
03113	200

Trapezoidal DL/DS

Code-No.	Type
03168	120
03188	160
03118	200

Ballscrew QS

Code-No.	Type
03167	60
03187	80
03117	100

Trapezoidal QS

Code-No.	Type
03166	60
03186	80
03116	100

Cover caps

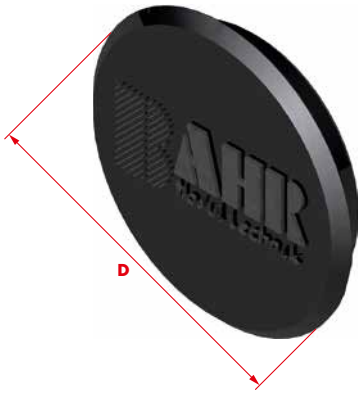

Code-No.	Type	D	Position
04206	LL/LS 60 - 80	15	Bearing-block
	QL/QS 60		Servicing bores
04205	ELK 30	19	Bearing-block
	QL/QS 80 - 100, DL/DS 120		Servicing bores
	QL 60		Carriage
04235	ELZ 30	28	Pulley-block
	ELT/K 40, EGT/K 40, W 16		Bearing-block
	DL/DS 160 - 200		Servicing bores
	QL 80 - 100		Carriage
04245	ELZ 40, ELHZ 60, ELVZ 60	37	Pulley-block
04265	LL/LS 60, G 90 ELZ/MLZ 60, ELHZ 80,ELVZ80, DLZ 120, QLZ/QSZ 60	47	Pulley-block
04285	LL/LS 80 ELZ/MLZ 80, ELHZ 100, ELVZ 100, DLZ/DSZ 160, QLZ/QSZ 80	68	Pulley-block
04215	ELZ/MLZ 100, DLZ/DSZ 200, QLZ/QSZ 100	90	Pulley-block
04225	ELZ 125 / QS 125	110	Pulley-block
042650	D 120, Q 60	32	Bearing-block
042850	D 160, Q 80	40	Bearing-block
042150	D 200, Q 100	52	Bearing-block

Spare parts

Belt adjuster ELZ / MLZ

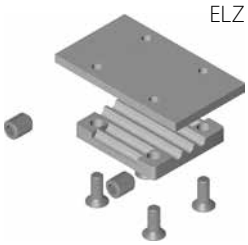

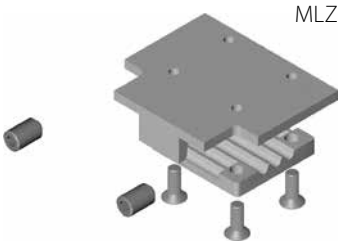

Code-No.	Type	Material
04060	30	Zinc coated steel
04061	40	Zinc coated steel
04062	ELZ 60(S)	Zinc coated steel
040621	MLZ 60(S)	Zinc coated steel
04063	ELZ 80(S)	Zinc coated steel
040631	MLZ 80(S)	Zinc coated steel
04064	ELZ 100	Zinc coated steel
040641	MLZ 100	Zinc coated steel
04065	125	Zinc coated steel

Belt adjuster ELSZ

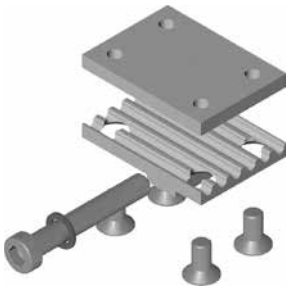

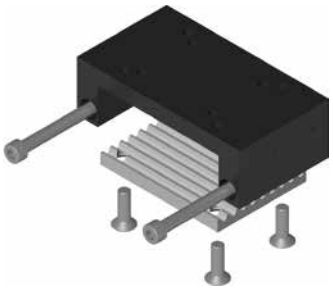

Code-No.	Type	Material
04071	30/40	Zinc coated steel
04076	30/40	Nickel faced steel
04072	60(S)	Zinc coated steel
04072HD	60(S)HD	Zinc coated steel
04077	60(S)	Nickel faced steel
04077HD	60(S)HD	Nickel faced steel
04073	80(S)	Zinc coated steel
04073HD	80(S)	Zinc coated steel
04078	80(S)	Nickel faced steel
04078HD	80(S)HD	Nickel faced steel
04074	100	Zinc coated steel
04079	100	Nickel faced steel
04079HD	100HD	Nickel faced steel
04070	125	Zinc coated steel
04075	125	Zinc coated steel
04075HD	125HD	Zinc coated steel

Belt adjuster ELHZ / ELVZ

Code-No.	Type	Material
04080	ELHZ 60(S)	Black anodized Al and zinc coated steel
04081	ELHZ 80(S)	Black anodized Al and zinc coated steel
04082	ELHZ 100	Black anodized Al and zinc coated steel
04083	ELHZ 125	Black anodized Al and zinc coated steel

Code-No.	Type	Material
04090	ELVZ 60(S)	Black anodized Al and zinc coated steel
04091	ELVZ 80(S)	Black anodized Al and zinc coated steel
04092	ELVZ 100	Black anodized Al and zinc coated steel
04093	ELVZ 125	Black anodized Al and zinc coated steel

Belt adjuster

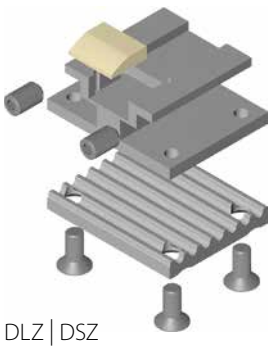

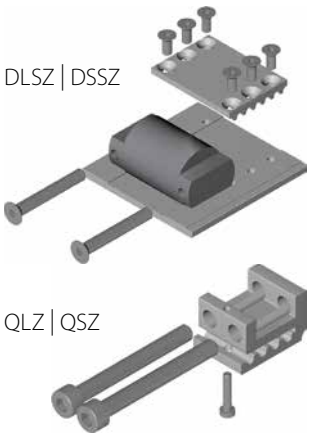

Code-No.	Type	Material
04084	DLZ/DSZ 120	Nature anodized Al and zinc coated steel
04086	DLZ/DSZ 160	Nature anodized Al and zinc coated steel
04085	DLZ/DSZ 200	Nature anodized Al and zinc coated steel
040861	DLZ/DSZ 160 HD	Nature anodized Al and zinc coated steel
040851	DLZ/DSZ 200 HD	Nature anodized Al and zinc coated steel
04066	DLSZ 120	Zinc coated steel
04067	DLSZ/DSSZ 160	Zinc coated steel
04087	QLZ/QSZ 60	Nature anodized Al
04088	QLZ/QSZ 80	Nature anodized Al
04089	QLZ/QSZ 100	Nature anodized Al
04094	QSZ 125	Nature anodized Al

Spare parts

1.2

Toothed belt

Toothed belts are available by the meter. Temperature resistant from -10 ° C to 50 ° C, please call outside this Temperature range our technical service.

Belt with steel reinforcement PU HP PAZ		
Code No.	**Type**	**Toothed belt**
00531	**ELZ 30**	3M 12
00532	**ELZ 40**	5M 15
00534	**ELZ/ML 60 (S)**	5M 25
00536	**ELZ/ML 80 (S)**	8M 30
00538	**ELZ/ML 100**	8M 50
00540	**ELZ 125**	8M 70
00531	**ELZG 30**	3M 12
00532	**ELZG 40**	5M 15
00534	**ELZG 60 (S)**	5M 25
00536	**ELZG 80 (S)**	8M 30
00542	**ELZZ 60 (S)**	5M 09
00543	**ELZZ 80 (S)**	8M 12
00544	**ELZZ 100**	8M 20
00536	**ELZZ 125**	8M 30
00546	**ALLZ 203**	8M 100
00546	**ALLZ 204**	8M 100
00534	**DLZ / DSZ 120**	5M 25
00536	**DLZ / DSZ 160**	8M 30
00538	**DLZ / DSZ 200**	8M 50
00538	**DLZ / DSZ 160 HD**	8M 50
00540	**DLZ / DSZ 200 HD**	8M 70
00534	**QLZ / QSZ 60**	5M 25
00536	**QLZ / QSZ 80**	8M 30
00538	**QLZ / QSZ 100**	8M 50
00540	**QSZ 125**	8M 70
00534	**DLZPVI / DSZPVI 120**	5M 25
00536	**DLZPVI / DSZPVI 160**	8M 30
00538	**DLZPVI / DSZPVI 200**	8M 50
00547	**LLZ / LSZ 60**	5M 30
00548	**LLZ / LSZ 80**	8M 30

Belt with steel reinforcement PU HP PAZ		
Code No.	**Type**	**Toothed belt**
005341	**DLVZ 120**	5M 25
005341	**DLVZ 160**	5M 25
005341	**ELHZ / ELVZ 60**	5M 25
005341	**ELHZ / ELVZ 80 (S)**	5M 25
005451	**ELHZ / ELVZ 100**	8M 48
005381	**ELHZ / ELVZ 125**	8M 50
00531	**ELZU 30**	3M 12
00532	**ELZU 40**	5M 15
00534	**ELZU 60 (S)**	5M 25
00536	**ELZU 80 (S)**	8M 30
00538	**ELZU 100**	8M 50
00532	**ELZI 30**	5M 15
00534	**ELZI 40**	5M 25
00536	**ELZI 60**	8M 30

Ex - protection ATEX PU HP PAZ PAR antistatic		
Code No.	**Type**	**Toothed belt**
00532EX	**ELZ 40**	5M 15
00534EX	**ELZ 60/60S**	5M 25
00536EX	**ELZ 80/80S**	8M 30
00538EX	**ELZ 100**	8M 50
00540EX	**ELZ 125**	8M 70
00536EX	**ELFZ 60 S**	8M 30
00538EX	**ELFZ 80 S**	8M 50
00540EX	**ELFZ 100**	8M 70
00546EX	**ELFZ 125**	8M 100
00547EX	**LLZ 60**	5M 30

Code-No	length in mm
00534	5000

Sample ordering code:
Belt 5M 25, PU HP PAZ, 5m long

Spare parts

Toothed belt

Toothed belts are available by the meter. Temperature resistant from -10 ° C to 50 ° C, please call outside this Temperature range our technical service.

Ω - redirection pulley block steel reinforcement PU HP PAZ		
Code No.	**Type**	**Toothed belt**
00536	**ELFZ 60 S**	8M 30
00538	**ELFZ 80 S**	8M 50
00540	**ELFZ 100**	8M 70
00546	**ELFZ 125**	8M 100

00531	**ELSZ 30**	3M 12
00532	**ELSZ 30 HD**	5M 15
00532	**ELSZ / ELSD 40**	5M 15
00534	**ELSZ / ELSD 40 HD**	5M 25
00534	**ELSZ / ELSD 60 (S)**	5M 25
00537	**ELSZ / ELSD 60 (S) HD**	8M 30
00536	**ELSZ / ELSD 80 (S)**	8M 30
00538	**ELSZ / ELSD 80 (S) HD**	8M 50
00538	**ELSZ / ELSD 100**	8M 50
00540	**ELSZ / ELSD 100 HD**	8M 70
00540	**ELSZ 125**	8M 70
00546	**ELSZ 125 HD**	8M 100

00532	**QSSZ 60**	5M 15
00534	**QSSZ 80**	5M 25

00536	**DSZS 160** (PU HF PAZ)	8M 30
00536	**DLSZ 120**	8M 30
00538	**DLSZ 160**	8M 50
00540	**DLSZ 200**	8M 70
00536	**DSSZ 120**	8M 30
00538	**DSSZ 160**	8M 50
00540	**DSSZ 200**	8M 70

Nubbed belt with steel reinforcement N10-PAN-HF		
Code No.:	**Type**	**Nubbed belt**
00547N	**LL / LS / ML 60**	N10

00534	**ELZT 40**	5M 25	Main belt
00532	**ELZT 40**	5M 15	Rotating belt
00536	**ELZT 60 (S)**	8M 30	Main belt
00534	**ELZT 60 (S)**	5M 25	Rotating belt
00538	**ELZT 80 (S)**	8M 50	Main belt
00536	**ELZT 80 (S)**	8M 30	Rotating belt
00540	**ELZT 100**	8M 70	Main belt
00538	**ELZT 100**	8M 50	Rotating belt

Toothed pulleys

coupling claw on one side

coupling claws on both sides

shaft on one side

shaft on both sides

Pulley size 30 - 80 bronzed steel / aluminium, size 100 - 125 aluminium.
Coupling claws compatible with Rotex GS system.

	Code No.		Code No.					
Size	**Coupling claw on one side**	**Coupling claw on both sides**	**Shaft on one side**	**Shaft on both sides**	**Belt**	**Number of teeth**	**mm/ rev.**	**Coupling Rotex**
ELZ / ELSZ with standard belt								
30	04010	04020	04828	04829	3M12	25	75	7
40	04011	04021	04830	04831	5M15	20	100	9
60(S)	04012	04022	04832	04833	5M25	26	130	14
80(S)	04013	04023	04834	04835	8M30	24	192	19
100	04014	04024	04836	04837	8M50	32	256	24
125	04015	04025	04838	04839	8M70	38	304	28
ELSZ with widened belt								
30	04011	04021	04830	04831	5M15	20	100	9
40	04012	04022	04832	04833	5M25	26	130	14
60(S)	04013	04023	04834	04835	8M30	24	192	19
80(S)	04014	04024	04836	04837	8M50	32	256	24
100	04015	04025	04838	04839	8M70	38	304	28
125	040150	-	-	-	8M100	38	304	-
ELZG								
30	04820	04821	04840	04841	3M12	40	120	7
40	04822	04823	04842	04843	5M15	32	160	9
60(S)	04824	04825	04844	04845	5M25	44	220	14
80(S)	04826	04827	04846	04847	8M30	40	320	19
ELZI								
30	048200	--	--	--	--	--	--	--
40	048220	048230	--	--	--	--	--	--
60	048240	--	--	--	--	--	--	--
ELSD with standard belt								
40	04011	04021	04830	04831	5M15	20	100	9
60(S)	04012	04022	04832	04833	5M25	26	130	14
80(S)	04013	04023	04834	04835	8M30	24	192	19
100	04014	04024	04836	04837	8M50	32	256	24
ELSD with widened belt								
40	04012	04022	04832	04833	5M25	26	130	14
60(S)	04013	04023	04834	04835	8M30	24	192	19
80(S)	04014	04024	04836	04837	8M50	32	256	24
100	04015	04025	04838	04839	8M70	38	304	28
ELZU								
30	04010	04020	04828	04829	3M12	25	75	7
40	04011	04021	04830	04831	5M15	20	100	9
60(S)	04012	04022	04832	04833	5M25	26	130	14
80(S)	04013	04023	04834	04835	8M30	24	192	19

Toothed pulleys

	Code No.		Code No.					
Size	**Coupling claw on one side**	**Coupling claw on both sides**	**Shaft on one side**	**Shaft on both sides**	**Belt**	**Number of teeth**	**mm/ rev.**	**Coupling Rotex**
ELZT internal belt								
40	04011				5M15	20	100	9
60(S)	04012				5M25	26	130	14
80(S)	04013				8M30	24	192	19
100	04014				8M50	32	256	24
ELZT external belt								
40	04012	04022	04832	04833	5M25	26	130	14
60(S)	04013	04023	04834	04835	8M30	24	192	19
80(S)	04014	04024	04836	04837	8M50	32	256	24
100	04015	04025	04838	04839	8M70	38	304	28
DLZ / DSZ								
DLZ/DSZ 120	04012	04022	04832	04833	5M25	26	130	14
DLZ/DSZ 160	04852	04853	04848	04849	8M30	22	176	19
DLZ/DSZ 200	04854	04855	04850	04851	8M50	28	224	24
DLZT / DSZT internal belt								
120	04012				5M25	26	130	14
DLZT / DSZT external belt								
120	04013	04023	04834	04835	8M30	24	192	19
QLZ / QSZ								
60	04012	04022	04832	04833	5M25	26	130	14
80	04852	04853	04848	04849	8M30	22	176	19
100	04854	04855	04850	04851	8M50	28	224	24
QS 125	048551	048552	---	---	8M70	36	288	28
QLSZ / QSSZ								
80	04012	04022	04832	04833	5M25	26	130	14
LL / LS								
60	---	04868	04869	---	5M30	26	130	14
80	---	048695	04848	04849	8M30	22	176	19
LL / LS / ML Special toothed pulley for nubbed belt								
60	048685	048686	---	---	5M30	13	130	14

Tensioner pulley	**Code No.**	**Belt**	**Number of teeth**	**mm/rev.**
LL / LS 60	048694	5M30	26	130
LL / LS 80	048697	8M30	22	176
LL / LS 60 for nubbed belt	048687	N10	13/3	130

two shafts short

one shaft long

two shafts long

	Code No.						
Size	**Two shafts short**	**One shaft long**	**Two shafts long**	**Belt**	**Number of teeth**	**mm/ rev.**	**Coupling Rotex**
ELHZ / ELVZ							
60(S)	04026	04860	04861	5M25	16	80	14
80(S)	04027	04862	04863	5M25	22	110	19
100	04028	04864	04865	8M50	18	144	24
125	04029	04866	04867	8M50	24	192	28

Spare parts

Toothed pulleys

Coupling claw on one side

Shaft on one side

Shafts on both sides

	Code No.						
Size	**Coupling claw on one side**	**Shaft on one side**	**Shaft on both sides**	**Belt**	**Number of teeth**	**mm/ rev.**	**Coupling Rotex**
			ELZZ				
60(S)	04856	048561	048562	5M09	26	130	14
80(S)	04857	048571	048572	8M12	24	192	19
100	04858	048581	048582	8M20	32	256	24
125	04859	048591	048592	8M30	38	304	28

Plug-in shaft for pulleys

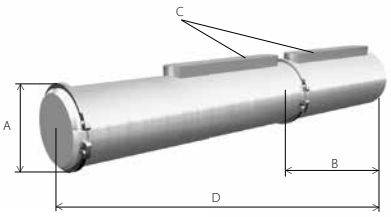

Plug--in shaft made of stainless steel, complete with key and locking rings for retrofitting.

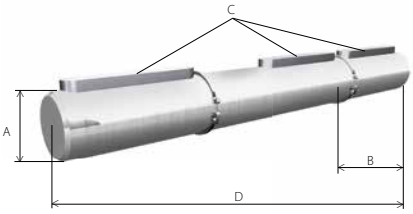

Shaft on one side							Shaft on both sides						
Code-No.	**Type**	**Size**	**A_{h7}**	**B**	**C**	**D**	**Code-No.**	**Type**	**Size**	**A_{h7}**	**B**	**C**	**D**
04030	**ELZ/ELSZ**	**30**	6	15	2x2x12	57	**04040**	**ELZ/ELSZ**	**30**	6	15	2x2x12	72
04031	**ELZ/ELSZ**	**40**	10	27	3x3x25	85	**04041**	**ELZ/ELSZ**	**40**	10	27	3x3x25	112
04032	**ELZ/ELSZ/ MLZ QLZ/QSZ**	**60**	14	35	5x5x28	115	**04042**	**ELZ/ELSZ QLZ/QSZ**	**60**	14	35	5x5x28	150
	DLZ/DSZ DLZT/DSZT	**120**						**DLZ/DSZ DLZT/DSZT**	**120**				
04033	**ELZ/ELSZ/ MLZ QLZ/QSZ**	**80**	18	45	6x6x40	145	**04043**	**ELZ/ELSZ QLZ/QSZ**	**80**	18	45	6x6x40	190
	DLZ/DSZ	**160**						**DLZ/DSZ**	**160**				
	DLSZ/DSSZ	**120**						**DLSZ/DSSZ**	**120**				
04034	**ELZ/ELSZ/ MLZ**	**100**	22	45	6x6x40	175	**04044**	**ELZ/ELSZ**	**100**	22	45	6x6x40	220
	DLSZ	**160**						**DLSZ**	**160**				
04035	**ELZ**	**125**	30	45	8x7x40	215	**04045**	**ELZ**	**125**	30	45	8x7x40	270

Tensioning set for sizes
EL 100 - 125, DL/DS 200, ML / QL / QS 100

Code-No.	Type	Tension ring
00472	**EL/ML 100 DL/DS 200 QL/QS 100**	22 x 32
00476	**E 125**	30 x 41

Spare parts

Pulley with integrated tension set D 120, 160, 200

120

160

200

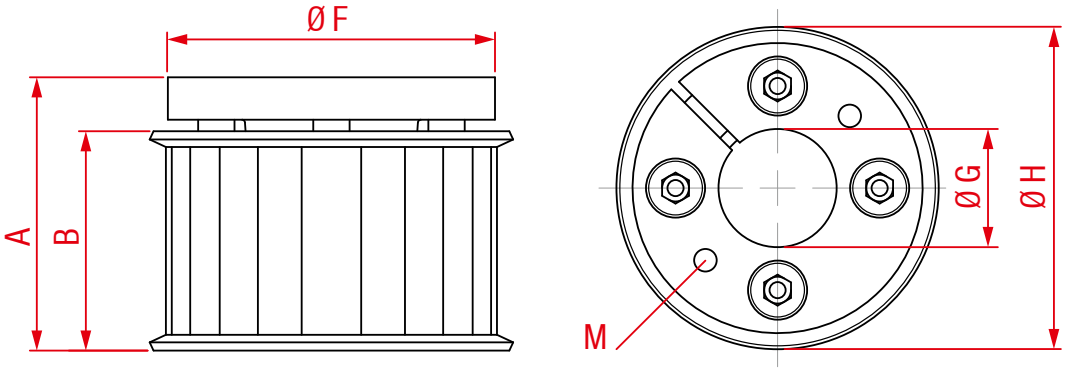

Type	Standard Code-No.	stainless Code-No.	A	B	Ø F	Ø G	Ø H
D 120	**04873**	**04874**	39	30	41	16	46
D 160	**04875**	**04876**	45	36,2	54	22	60
D 200	**04877**	**04878**	67,5	57,2	62	32	79

Belt type	Number of teeth
HTD 5M 25	26
HTD 8M 30	22
HTD 8M 50	28

M = Dismounting thread

Type	Clamping screws			Torque / axial force	
	M	z Number	T_A [Nm]	T [Nm]	F_{ax} [N]
D 120	M5	4	10	148	19 000
D 160	M6	4	17	244	22 000
D 200	M6	8	17	689	43 000

Function:

Pulley with integrated tension set for positioning systems DLZPVI (E) and DSZPVI (E). In order to realize a simple and fast assembling we reduced the number of parts. Each tension set has got two dismounting threads in order to disassemble the pulley easily.

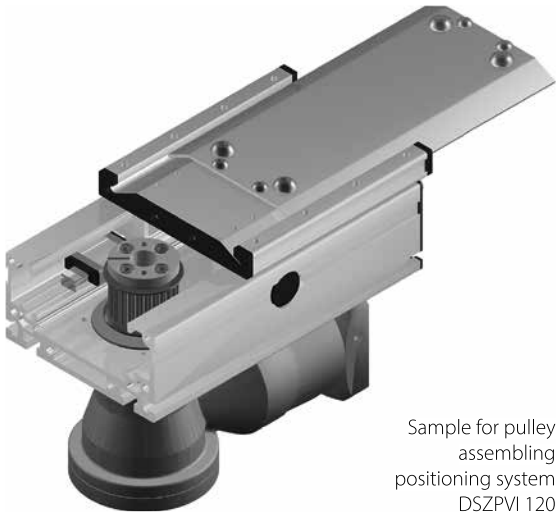

Sample for pulley assembling positioning system DSZPVI 120

Spare parts

Spur gears

ELZA | ELDZA

Size	1 Shaft			2 Shafts			mm/rev.	Modul
	Steel	Stainless steel	Plastic	Steel	Stainless steel	Plastic		
40	041900	041901	04190	041910	041911	04191	188,5	1,5
60	041920	041921	04192	041930	041931	04193	251,3	2
60 S	041980	041981	04198	041990	041991	04199	314,2	2
80 (S)	041940	041941	04194	041950	041951	04195	358,0	3
100	041960	041961	04196	041970	041971	04197	508,9	3

Accessories

2.2

Square nut

DIN 562

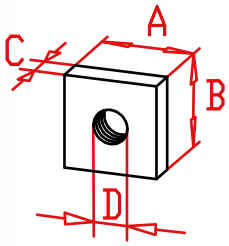

Slide nuts position refer to chapter 2.2 page 3
Material: galvanized steel

Code-No.	Type	A	B	C	D
02708	**M 4**	7	7	2,2	M 4
02710	**M 5**	8	8	2,7	M 5
02715	**M 6**	10	10	3,2	M 6
02714	**M 8**	13	13	4	M 8
02713	**M 10**	17	17	5	M 10
02721	**M 10**	25	20	8	M 10

T-nut

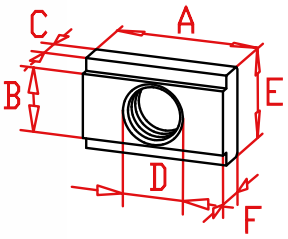

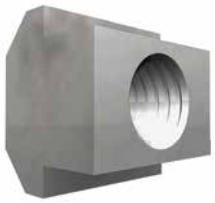

DIN 508

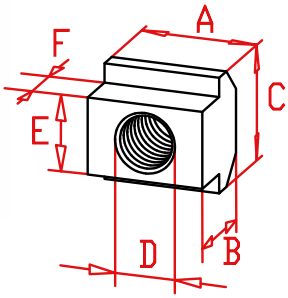

Slide nuts position refer to chapter 2.2 page 3
Material: galvanized steel

Code-No.	Type	A	B	C	D	E	F
02717	**M3**	8	4,2	2,1	M 3	6,9	4,3
02739	**M4**	10	4,2	2,1	M 4	6,9	3,3
02742	**M 5**	12	5,3	3	M 5	8	4
02709	**M 5**	14	8,1	4,5	M 5	14	6
02716	**M 6**	14	8,1	4,5	M 6	14	6
02718	**M 8**	18	8,1	4,5	M 8	14	6
02719	**M10**	22	8,1	4,5	M 10	14	6
02730	**M 6**	13	10	4	M 6	15	8
02731	**M 8**	13	10	4	M 8	15	8

Code-No.	Type	A	B	C	D	E	F
02734	**M 5**	10	8	10	M 5	6	4
02735	**M 6**	13	10	13	M 6	8	4
02736	**M 8**	15	12	15	M 8	10	6
02720	**M 10**	18	14	18	M 10	12	7
02722	**M 12**	22	16	22	M 12	14	8
02737	**M 16**	28	20	28	M 16	18	10

Rhombus nut

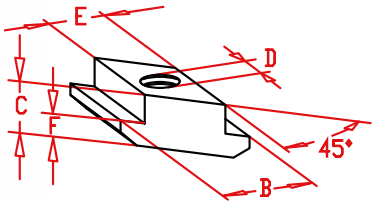

Slide nuts position refer to chapter 2.2 page 3
Material: galvanized steel

Code-No.	Type	B	C	D	E	F
02732	**M 8**	15	9	M 8	10	4,2
02733	**M 6**	15	9	M 6	10	4,2
02760	**M 5**	10	8	M 5	6	4

Half round nut

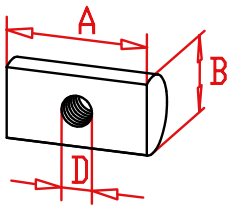

For guide body profile EL, ML, QL / QS and for fastening of jointing and mounting blocks. Material: galvanized steel

Size	Code-No.	Type	A	B	D
30	**02724**	**M 3**	28	5	2x M 3
40	**02725**	**M 5**	14	6	M 5
60 (S)	**02726**	**M 6**	18	10	M 6
80 (S)	**02728**	**M 8**	22	12	M 8
100	**02729**	**M 8**	22	16	M 8
125	**02723**	**M10**	25	20	M10

T-nut allocation

Bearing block profile EL

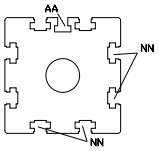

Size	T-slot nut slot AA Code No.	T-slot nut slot NN Code No.
30	02715	02715
40	02710	02715
60 (S)	02710	02718
80 (S)	02714	02719
100	02714	02720
125	02736	02722

Bearing block profile ELZ

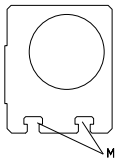

Size	T-slot nut slot M Code No.
30	02710
40	02735
60 (S)	02731 / 02719
80 (S)	02736
100	02720
125	02722

Guide body profile E

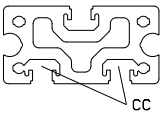

Size	T-slot nut slot CC Code No.
40	02730 / 02731
60	02730 / 02731
80	02730 / 02731

Guide body profile ML/LL/LS/ALL

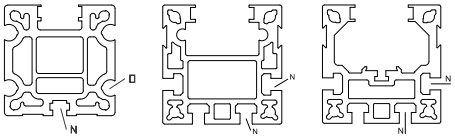

ML LL LS

Type	T-slot nut slot N Code No.	T-slot nut slot O Code No.
ML 60 (S)	02716 / 02718	02726
ML 80 (S)	02719	02728
ML 100	02720	02729
LL / LS 40	02708	
LL / LS 60	02734	
LL / LS 80	02735	
ALLM 200	02737	

ALLM

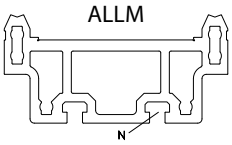

Guide body profile EL / EG

EL/EG ELDZA EL-W / ML-W GG

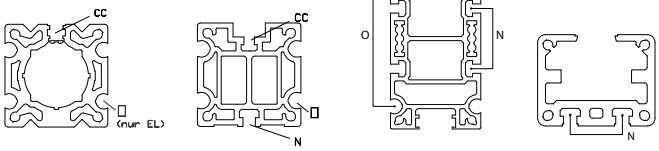

Size	T-slot nut slot CC Code No.	T-slot nut slot O Code No.	T-slot nut slot N Code No.
EL 30	02715	02724	-
EL/EG 40	02718	02725	-
EL/EG 60	02718	02726	-
EL/EG 80(S)	02718	02728	-
EL 100	02721	02729	-
EL 125	02721	02723	-
ELDZA 60(S)	02734	02726	02735
ELDZA 80(S)	02730	02728	02720
ELDZA 100	02736	02729	02720
EL-W/ML-W 60 (S)	-	02726	02734
GG 90	-	-	02736

Guide body profile DL/DS QL/QS

DL DS QL QS QS 125

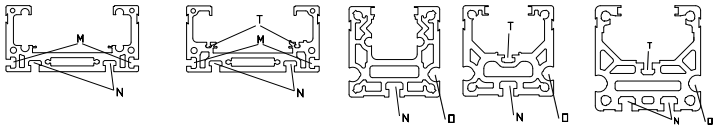

Size	T-slot nut slot N Code No.	T-slot nut slot M Code No.	T-slot nut slot T* Code No.	T-slot nut slot O* Code No.
DL/DS 120	02735	02734	02717	-
DL/DS 160	02736	02735	02739	-
DL/DS 200	02720	02736	02735	-
QL /QS 60	02734**	-	02739	02726
QL /QS 80	02735**	-	02742	02728
QL /QS 100	02720**	-	02716	02729
QS 125	02720	-	02736	02723

* only for DS/QS guide body profile
** not in QST/K guide body profile

Carriage profile EL / EG

Size	T-slot nut slot OO Code No.	T-slot nut slot MM Code No.
30	02715	-
40	02716 / 02709	-
60	02718	-
60 S	02736	-
80	02718 / 02719	02715
80S	02736	02735
100	02720	02713
125	02722	02720

EL/ML

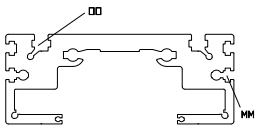

EG

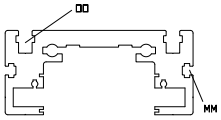

Carriage profile DL / DS / QL / QS

Size	T-slot nut slot O Code No.	T-slot nut slot M Code No.
DL/DS 120	02735	-
DL/DS 160	02736	-
DL/DS 200	02720	-
QL/QS 60	-	02735
QL /QS 80	-	02736
QL/QS 100	-	02720
QS 125	-	02722

DL

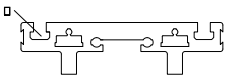

DS

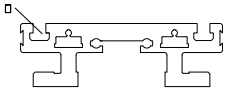

QL/QS

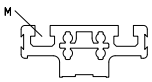

Slide nut dimensions refer to chapter 2.2 page 2

Handwheel with keyway and locking screw

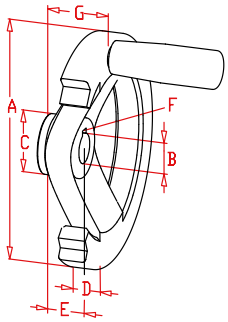

A plastic coated aluminium handwheel with a matt black finish. Equiped with a black handle.

Code-No.	Type	A	B	C	D	E	F	G
00050	**30**	70	6	17	13	15	-	20
00100	**40**	100	10	29	14,5	17	3x3	30
00160	**60**	140	14	36	16,5	19	5x5	36
00200	**80**	200	18	42	20,5	24	6x6	45
00222	**100**	200	22	42	20,5	24	6x6	45

Positional indicator

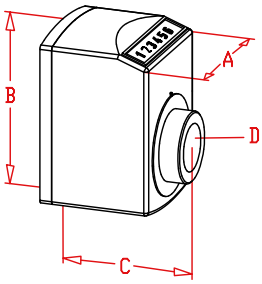

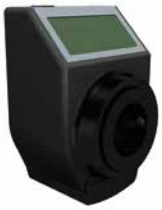

Code No. 00265 - 00268
electronical indicator

SH-FH

SV-FV

Shell made of polyamide orange. Ambient temperature 80°C. Any fitting position possible. Numeral height 6 mm. Accuracy of reading 0,1 mm.

Code-No.	Size	AxBxC	D	Type	pitch (mm)
00231..	**EL / EG** 30	33x47x31	6	SH	2,5 od. 3
00232..		33x47x31	6	FH	2,5 od. 3
00233..		33x47x31	6	SV	2,5 od. 3
00234..		33x47x31	6	FV	2,5 od. 3
00241..	**EL / EG** 40, 60, 80 **QS** 60, 80 **DL / DS** 120, 160	48x67x51	12,17,20	SH	4 od. 8
00242..		48x67x51	12,17,20	FH	4 od. 8
00243..		48x67x51	12,17,20	SV	4 od. 8
00244..		48x67x51	12,17,20	FV	4 od. 8
00251..		48x67x51	12,17,20	SH	5 od. 10
00252..		48x67x51	12,17,20	FH	5 od. 10
00253..		48x67x51	12,17,20	SV	5 od. 10
00254..		48x67x51	12,17,20	FV	5 od. 10
00261..	**EL** 100, 125 **QS** 100 **DL** 200	56x75x64	22,25,30	SH	6 od. 12
00262..		56x75x64	22,25,30	FH	6 od. 12
00263..		56x75x64	22,25,30	SV	6 od. 12
00264..		56x75x64	22,25,30	FV	6 od. 12
00265..	**EL / EG** 40, 60, 80, 100, 125 **QS** 60, 80, 100 **DL / DS** 120, 160, 200	48x76x39	12,17,20,22,25,30	SH	0 - 14
00266..		48x76x39	12,17,20,22,25,30	FH	0 - 14
00267..		48x76x39	12,17,20,22,25,30	SV	0 - 14
00268..		48x76x39	12,17,20,22,25,30	FV	0 - 14

0024108

Sample odering code: size 40, 8 mm pitch increasing horizontal.

Spindle clamp EL / EG, DL / DS /QST/K

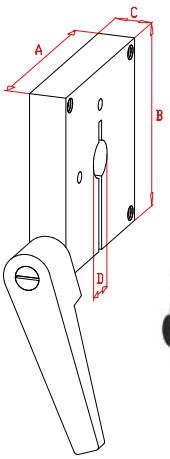

Black anodized aluminium, steel hand lever.

Code-No.	Type	A	B	C	D	Handlever
00291	**EL/EG 30**	43	50	10	6	M 6
00292	**EL/EG 40**	58	70	10	12	M 6
00293	**EL/EG 60**	80	80	15	17	M 8
00294	**EL/EG 80**	100	100	20	20	M10
00295	**E 100**	130	130	20	25	M10
00296	**E 125**	-	-	-	-	-
00283	**DL/DS 120**	62	80	15	12	M 6
00284	**DL/DS 160**	80	90	20	17	M 8
00285	**DL/DS 200 QS 100**	90	99	20	25	M 8
00286	**QS 80**	80	90	20	17	M 8
00287	**QS 60**	62	80	15	12	M 6

Accessories

Carriage clamp EL / ML / EG

Carriage with carriage clam. Carriage length can be chosen as required. Depending on type of drive (spindle or belt) the position of clamp can be different. Dimensions by inquiry.

Code-No.	Type
00311	EG 30
00312	EG 40
00313	EG 60
00314	EG 80
00301	EL 30

Code-No.	Type
00302	EL 40
00303	EL/ML 60
00304	EL/ML 80
00305	EL/ML 100
00306	EL 125

Assembly plate

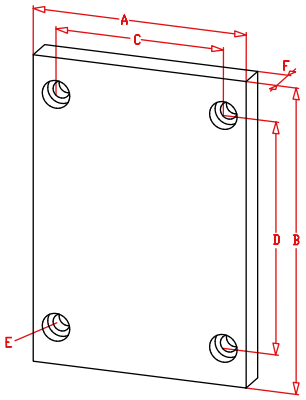

EL/EG

QL/QS

DL/DS

Assembly plate, anodized aluminium, enables various units to be assembled in a simple manner when combinations of linear units are to be used. Complete with screws and slide-nuts. Tapped holes can be made on request.

Code-No.	Type	A	B	C	D	E for	F
00940	EG 40	70	100	52	52	M 6	12
00960	EG 60	100	144	80	126	M 8	15
00980	EG 80	140	170	110	147	M10	15
00935	EL 30	70	70	56	56	M 6	10
00945	EL 40	100	100	66	84	M 6	12
00965	EL/ML 60	144	144	96	126	M 8	15
00964	EL/ML 60 S	170	170	108	152	M 8	15
00985	EL/ML 80	170	170	117	150	M10	15
00984	EL/ML 80 S	190	190	126	172	M 8	15
00915	EL/ML 100	230	270	155	248	M10	20
00925	EL 125	295	335	200	285	M12	20
00966	DL/DS 120	120	140	96	122	M 6	12
00986	DL/DS 160	160	180	130	162	M 8	15
00916	DL/DS 200	200	240	160	218	M 10	20
00967	QL 60	60	140	36	122	M 6	12
00987	QL 80	80	180	50	162	M 8	15
00917	QL 100	100	240	66	218	M10	20
00926	QS 60	60	165	36	147	M6	12
00928	QS 80	80	216	50	198	M8	15
00911	QS 100	100	248	66	226	M10	20
00921	QS 125	125	270	82	244	M12	20
00970	LL 40	34	120	10	63	M4	12
00968	LL 60	54	175	18	93	M6	12
00969	LS 60	54	116	18	93	M6	12
00988	LL 80	74	250	18	90	M6	12
00989	LS 80	74	149	18	120	M6	12

Connecting profiles DL / DS

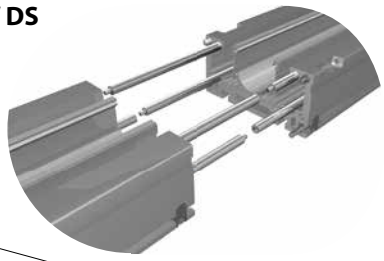

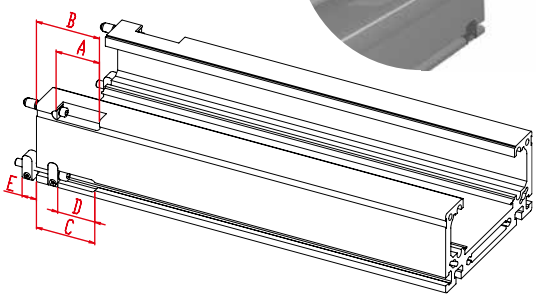

The millings for the extensions are directly incorporated into the profile, so that there is only one transition point in the profile. The guide shafts or rail guides are jointed at a different position. To ensure that even the smallest tolerance deviations are avoided, only pieces of the same lots are joined to each other.

Code-No.	Type	A	B	C	D	E
03090_02	DS 120	47,5	66	78	56	12
03090_01	DL 120	47,5	66	78	56	12
03091_02	DS 160	39	58	78,5	56,5	12
03091_01	DL 160	39	58	78,5	56,5	12
03092_02	DS 200	53	77	71,3	45,3	17,55
03092_01	DL 200	53	77	71,3	45,3	17,55

Support and mounting block

EG

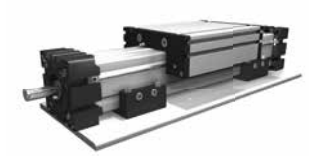

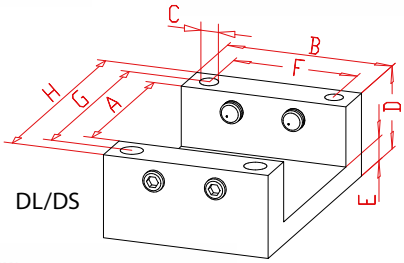

DL/DS

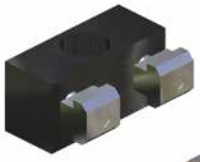

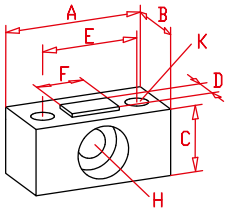

Black anodized aluminium, for mounting and for supporting long units. These components can be ready mounted on the units by us to customer's specification. Mounting can be clear or tapped holes and slide-nuts.

Code-No.	Type	A	B	C	D	E	F	G	H
03043	EG 40	40	40	6,5	24,0	9	1 hole	50	60
03063	EG 60	60	60	9,0	35,0	11		75	90
03083	EG 80	80	80	10,5	39,0	11	60	100	120

Code-No.	Type	A	B	C	D	E	F	G	H for	K for
03001	DL/DS 120	34	17	14	6	22	10	134	M6	M5
03002	DL/DS 160	40	20	19	8	28	14	179	M8	M6
03003	DL/DS 200	50	30	24	10	34	18	224	M10	M8

Mounting profile EL / ML / Q / L

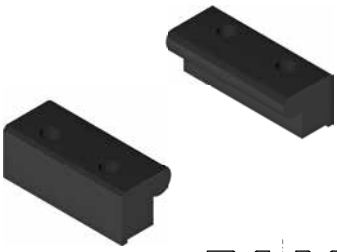

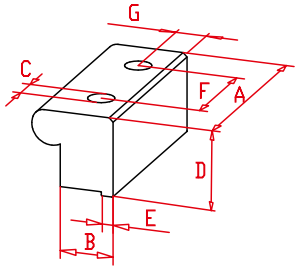

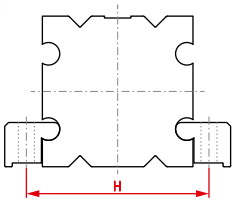

Black anodized aluminium, for mounting.
Mounting can be clear or tapped holes. Pair (without screws)

Code-No.	Type	A	B	Ø C	D	E	F	G	H
03039	EL 30	24	11,5	5,5	10	3	12	6,5	41
03049	EL 40	32	15,5	6,6	13	4	16	9	54
03069	EL/ML/Q 60	48	17,5	9	18	4	24	9,5	77
03089	EL/ML/Q 80	64	19,5	9	23,5	4	32	11,5	97
03019	EL / Q 100	80	21,5	11	30,5	4	40	12	120
03029	EL / QS 125	100	27	13,5	40	6	50	15,5	149
03007	L 40	32	15,5	6,6	16	4	16	9	53
03009	L 60	64	19,5	9	22,8	4	32	11,5	76
03099	L 80	64	19,5	9	25,5	4	32	11,5	97

Double mounting profile EL / ML / Q / L

Black anodized aluminium. For mounting and joining body profiles longer than standard.
Mounting can be clear or tapped holes.
Pair (without screws)

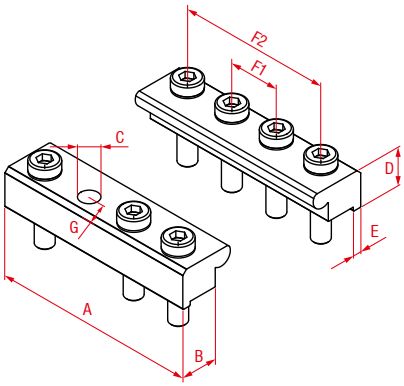

Code-No.	Type	A	B	C	D	E	F1	F2	G	H
03039-2	EL 30	48	11,5	5,5	10	3	12	36	6,5	41
03049-2	EL 40	64	15,5	6,6	13	4	16	48	9	54
03069-2	EL / ML / Q 60	96	17,5	9	18	4	24	72	9,5	77
03089-2	EL / ML / Q 80	128	19,5	9	23,5	4	32	96	11,5	97
03019-2	EL / QL / QS 100	160	21,5	11	30,5	4	40	120	12	120
03029-2	EL / QS 125	200	27,0	13,5	40	6	50	150	15,5	149
03007-2	L 40	64	15,5	6,6	16	4	16	48	9	53
03009-2	L 60	128	19,5	9	23,5	4	32	96	11,5	76
03099-2	L 80	128	19,5	9	23,5	4	32	96	11,5	97

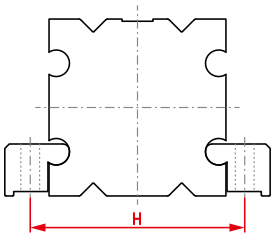

Accessories

Mounting block EL / EH / ML / Q

Black anodized aluminium, for mounting and for supporting long units. These components can be ready mounted on the units by us to customer's specification. Mounting can be clear or tapped holes and slide-nuts.

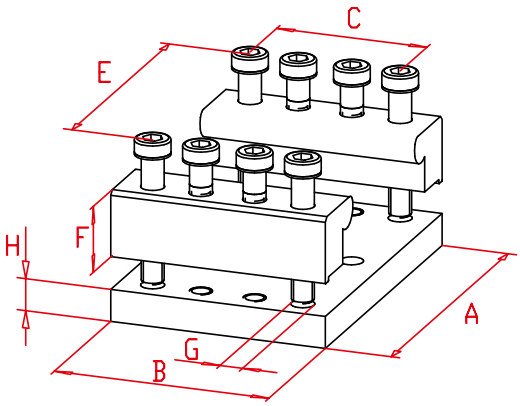

* only 1 hole

Code-No.	Type	A	B	C	E	F	G	H
030301	EL 30	54	30	*	38	10	4,2	6
030401	EL/EH 40	72	40	*	50	13	6,4	9
030601	EL/EH/ML/Q 60	96	60	*	75	18	8,5	10,8
030801	EL/EH/ML/Q 80	120	80	60	100	23,5	10,5	10,8
030101	EL/EH/ML/Q 100	144	100	70	120	30,5	10,5	14,8
030201	EL/EH/QS 125	180	125	85	150	40	11	20
030071	L 40	71	40	26	53	16	6,5	9
030091	L 60	100	60	*	76	23,5	9	10,8
030991	L 80	120	80	60	100	23,5	10,5	10,8

Jointing profile EL / ML / Q

Black anodized aluminium. For joining body profiles longer than standard (without screws).

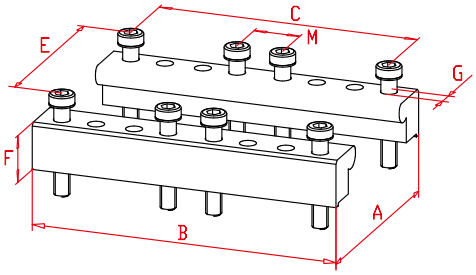

Code-No.	Type	A	B	C	E	F	G	M
030312	EL 30	54	60	50	38	10	4,2	10
030412	EL 40	72	80	66	50	13	6,4	14
030612	EL/ML/Q 60	96	120	100	75	18	8,5	20
030812	EL/ML/Q 80	120	160	140	100	23,5	10,5	20
030112	EL/ML/Q 100	144	200	170	120	30,5	10,5	30
030212	EL/QS 125	180	250	210	150	40	11	40
030712	L 40	71	80	66	53	16	6,5	14
030912	L 60	100	120	100	76	23,5	9	20
039912	L 80	120	160	140	100	23,5	10,5	20

Jointing block EL / ML / Q / L

Black anodized aluminium, for jointing, mounting and supporting long units. These components can be ready mounted on the units by us to customer's specification. Mounting can be clear or tapped holes and slide-nuts.

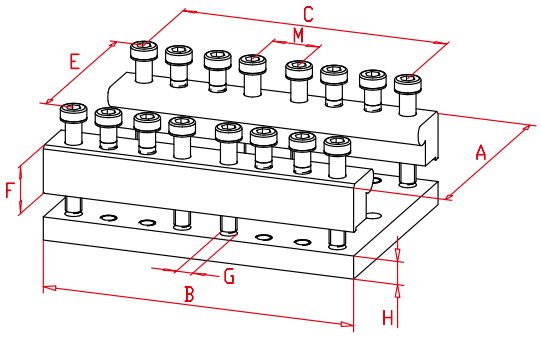

Code-No.	Type	A	B	C	E	F	G	H	M
030311	EL 30	54	60	50	38	10	4,2	6	10
030411	EL 40	72	80	66	50	13	6,4	9	14
030611	EL/ML/Q 60	96	120	100	75	18	8,5	10,8	20
030811	EL/ML/Q 80	120	160	140	100	23,5	10,5	10,8	20
030111	EL/ML/Q 100	144	200	170	120	30,5	10,5	14,8	30
030211	EL/QS 125	180	250	210	150	40	11	20	40
030072	L 40	71	80	66	53	16	6,5	9	14
030092	L 60	100	120	100	76	23,5	9	10,8	20
030992	L 80	120	160	140	100	23,5	10,5	10,8	20

Proximity / limit switch holder EG

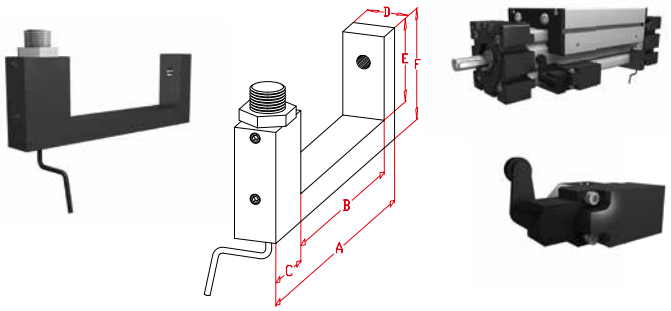

Black anodized aluminium bracket, fixed by grub screws. Position along the length of the units is adjustable. Fixing holes for proximity and limit switches are provided.

Code-No.	Type	A	B	C	D	E	F	Drill hole
01340	EG 40	72	40	24	15	19	28	8,2
01360	EG 60	92	60	24	15	26	35	12,2
01380	EG 80	114	81	24	15	30	40	12,2

Proximity / limit switch holder EL

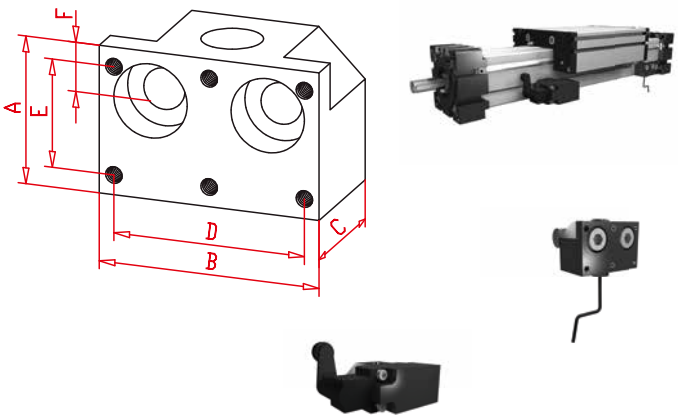

Black anodized aluminium bracket, fixed by screws into with half-round nuts in the body half-round-slots, hence position axially adjustable. Fixing holes for proximity and limit switches are provided. Complete with screws and half-round nuts.

Code-No.	Type	A	B	C	D	E	F	Drill hole
01331	EL 30	12	30	12	-	-	6	8,2
01341	EL 40	28	32	25	26	22	8	8,2
01361	EL 60	30	40	25	32	22	11	12,2
01381	EL 80	30	45	25	39	22	10	12,2
01311	EL 100	40	55	20	49	22	12	12,2
01321	EL 125	45	60	25	52	22	12,5	12,2
01300	EL60-125	Reducing sleeve Ø 12 to Ø 8						

Accessories

Limit switch

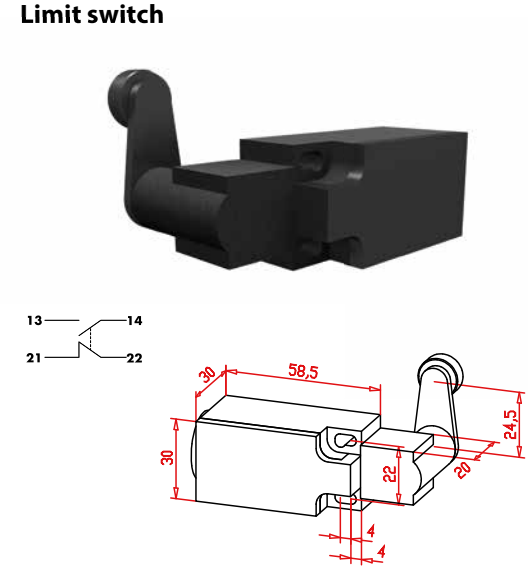

Fully insulated thermoplastic switch with adjustable operation lever. The operation device can be turned by 90°, the lever can be turned to engage by 360°.

Max. voltage	380 V
Max. constant current	6 A
Max. current at make	16 A
Duty classification	max.6000/h
Mechanical lifetime 1 x 10^7	
Operating repeatability	± 0,01
Transit time/snap switch	ca. 10 ms
Protection class	IP 65 (DIN 40050)
Working temperature	-30° C to +80° C

Code-No.	choice
01101	standard
01101ex	Version ATEX

Limit switch

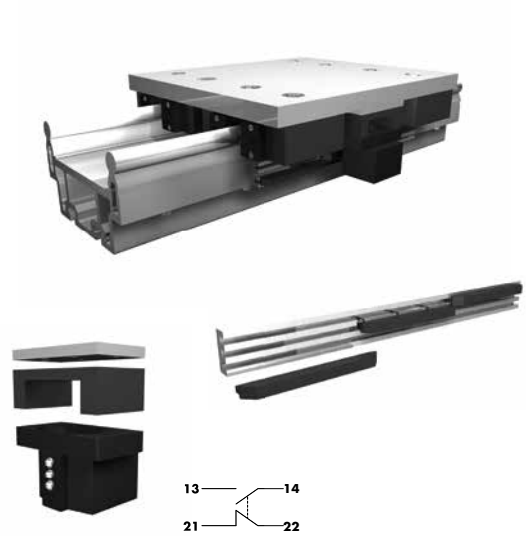

3 electromechanical switches in a row.

Nominal voltage	250 V
Cont. current	6 A
Switch rate	max.300/min.
Mech. Lifetime	>30 Mio.
Repeatability	± 0,01 mm
Transit time/snap switch	ca. 10 ms
Protection class	IP 67 (DIN 60529)
Working temperature	-5° C bis +80° C

Code-No.	choice
01105	switch system *

* consisting of 2 cam ledges and 3 cams

Proximity switch

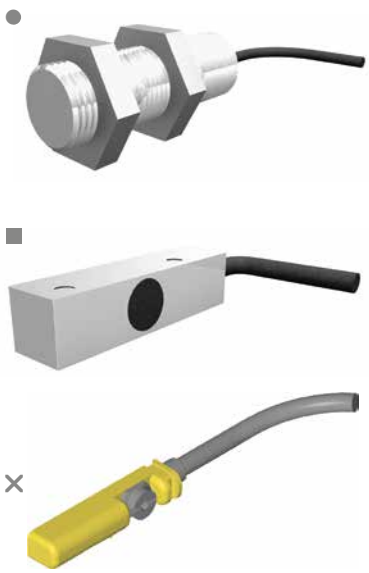

Inductive proximity switches. Protection class IP67

	Code-No.	Type	Switching distance	Voltage	Output	Function
●	01003	M8	1 mm	10 - 30 VDC	200 mA	PNP NC
●	01004	M8	1 mm	10 - 30 VDC	200 mA	PNP NO
●	01001	M12	2 mm	10 - 30 VDC	200 mA	PNP NC
●	01002	M12	2 mm	10 - 30 VDC	200 mA	PNP NO
■	010014	Q 8x8	2 mm	10 - 35 VDC	200 mA	PNP NC
■	010013	Q 8x8	2 mm	10 - 35 VDC	200 mA	PNP NO
×	010142	EHT/K	---	10 - 30 VDC	150 mA	PNP NO
×	010143	EHT/K	---	10 - 30 VDC	150 mA	PNP NC

PNP NO (normally open) =
PNP NC (normally closed) =

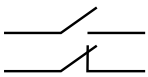

Accessories

Proximity / limit switch holder
DL / DS / QL / QS / LL / LS

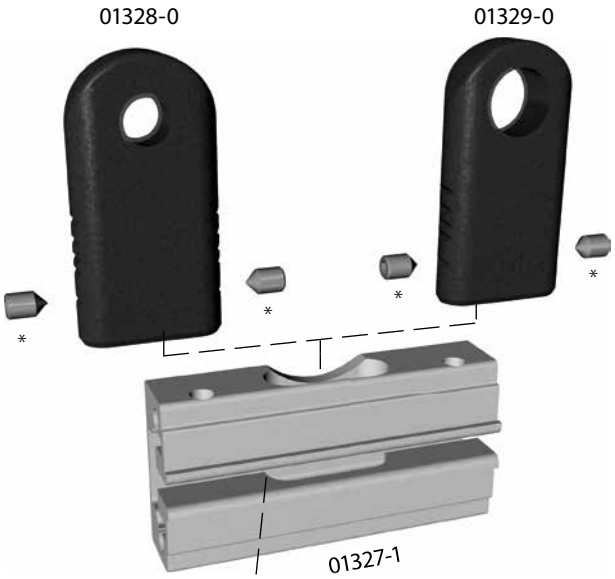

Code-Nr.	Type
01327-0	Base holder for a limit switch
01327-1	Base holder for a proximity and a limit switch
01327-4	Base holder for a sensor bracket
01328-0	plug in holder for a proximity switch M8x1
01329-0	plug in holder for a proximity switch M12x1
01330-0	plug in holder for a proximity switch Q 8x8
01335-0	Sensor holder DL/DS 120 / QL/QS 60 H = 46,5mm
01335-1	Sensor holder DL/DS 160 H = 50,5mm
01335-2	Sensor holder QL/QS 80 H = 52,5mm
01335-3	Sensor holder DL/DS 200 H = 48 mm
01335-4	Sensor holder QL/QS 100 H = 57 mm

* stainless steel grub screws

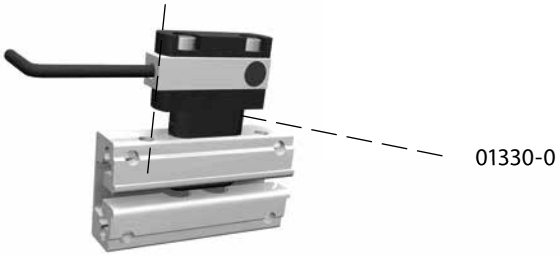

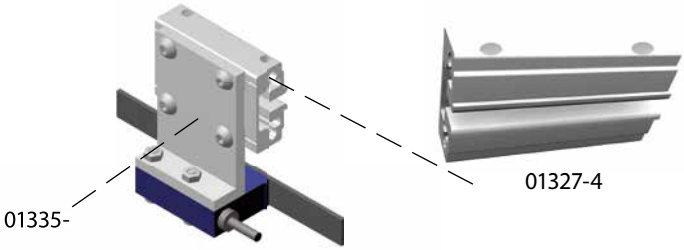

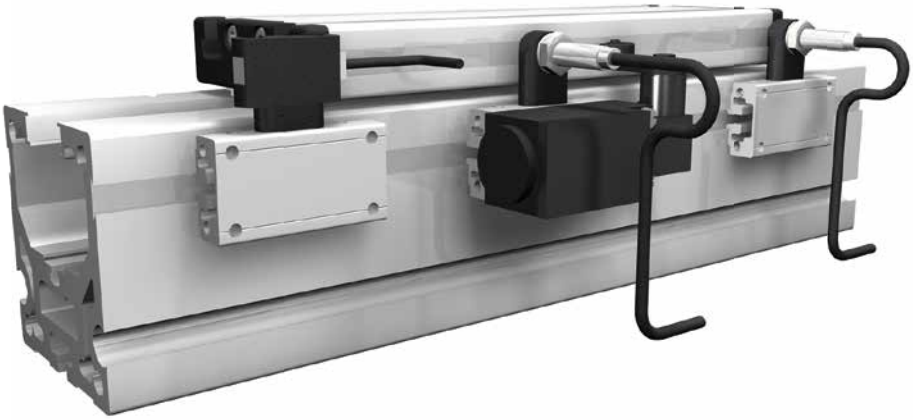

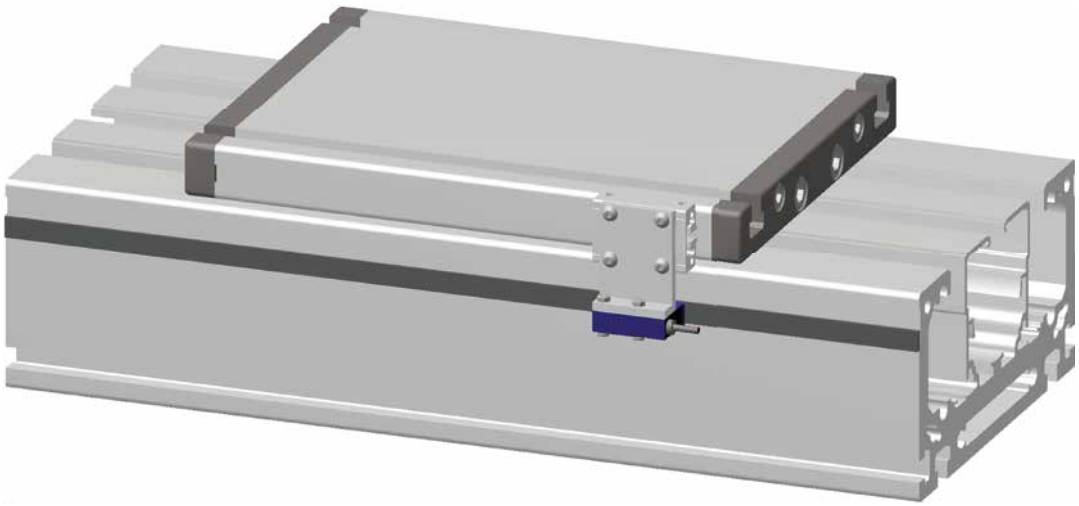

Accessories

Activating sheet EL / ML / EG

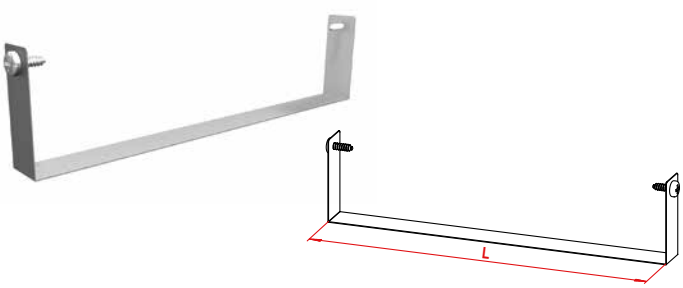

For external mounting proximity switches.

Code-No.	Type	Length - L
01000	EL 30	Q
01005	EL 40	Q
01006	EL/ML 60	Q
01011	EL/ML 60S	Q
01007	EL/ML 80	Q
01010	EL/ML 80S	Q
01008	EL/ML 100	Q
01009	EL 125	Q
010000	EG 30	Q
010050	EG 40	Q – 7
010060	EG 60	Q – 9
010070	EG 80	Q – 11
01018	DL/DS 120	Q – 16
01017	DL/DS 160	Q – 20
01016	DL/DS 200	Q – 30
01030	QL/QS 60	Q – 12
01031	QL/QS 80	Q – 16
01032	QL/QS 100	Q – 20
01032	QS 125	Q – 30
010152	LL/LS 40	Q2
01015	LL/LS 60	Q2
01019	LL/LS 80	Q2

Q = Carriage lenght

Activating sheet QL / QS - DL / DS

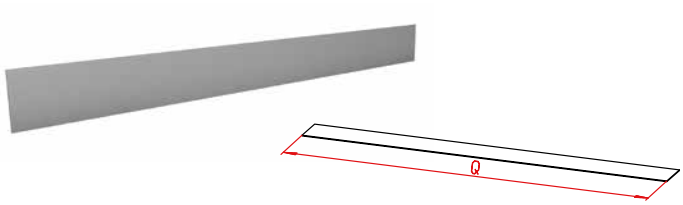

Activating strip LL / LS

only on combination with matching assembly plate*

*Assembly plate

LL 60 00968, **LL 80** 00988

LS 60 00969, **LS 80** 00989

*

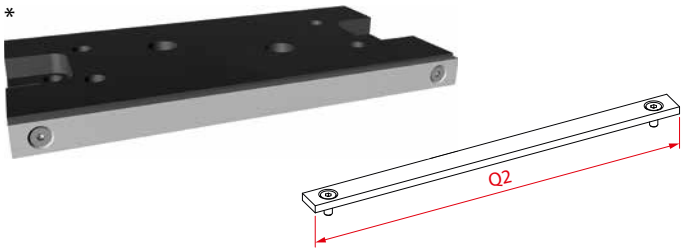

Complete bellows DL / DS

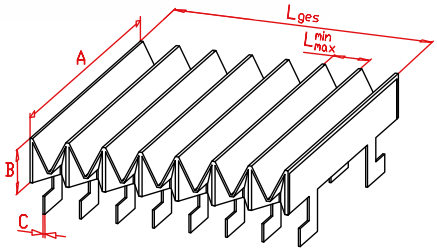

Bellow ERA7815, max. 120°, bellow frame PVC.

Code-No.	Type	A	B	C	Fold	
					L_{min}	L_{max}
02901	DL/DS 120	120	19	1	4	22
02902	DL/DS 160	160	24	1	4	31
02903	DL/DS 200	200	28	1	4	28

02902	500

Sample ordering code: Size 160, unit length L = 500 mm.

2.2

Motor adapter

Black anodized aluminium, can be designed for any motor. Simple assembly, accurate alignment.

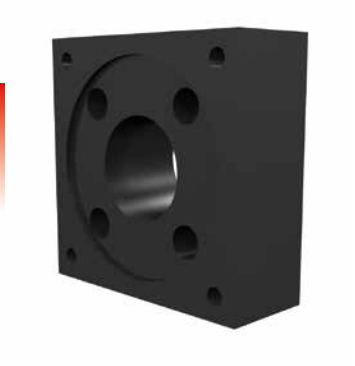

Code-No.	Typ spindle
01531	EL/EG 30
01541	EL/EG 40
01561	EL/ML/EG 60 / DL/DS 120 QS 60
01581	EL/ML/EG 80 / DL/DS 160 QS 80/ GG/GDG90
01511	EL/ML 100 DL/DS 200 QS 100
01521	EL 125

Code-No.	Typ belt-drive
01831	EL 30
01832	ELZI 30 / LL 40
01841	EL 40
01842	ELZI 40
01861	EL/ML 60 / DL/DS 120 QL/QS 60 / LL/LS 60
01862	ELZI 60
01881	EL/ML 80 / DL/DS 160 QL/QS 80
01811	EL/ML 100 / DL/DS 200 QL/QS 100
01821	EL 125 /QS 125

DL

EL

Bevel gear pair EL / EG

C 45 steel, helical gear, with keyway.

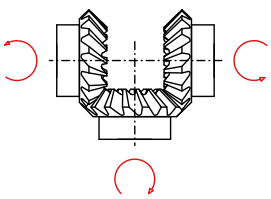

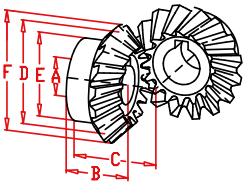

Code-No.	Type	i	Modul	Number of teeth	A_{h7}	B	C	D	E	F
00641	40	1:1	2	16	10	13	28	-	22	35
00642	40	1:1,5	1,5	16	10	17	30	24	20	27
				24		17,5	27	36	26	38
00661	60	1:1	2,5	16	14	18,5	33	-	30	43
00662	60	1:1,5	2	16	14	21	38	32	26	36
				24		23	35	48	35	51
00681	80	1:1	3	16	18	23	40	-	35	51,5
00682	80	1:1,5	3	16	18	28	54	48	40	53
				24	19	30	49	72	50	76
00611	100	1:1	4	16	22	35,5	54	-	45	69,7
00612	100	1:1,5	3	16	22	27,7	50	48	34	53
				24		31	44	72	38	76

Combination cube EL / EG
Cover caps

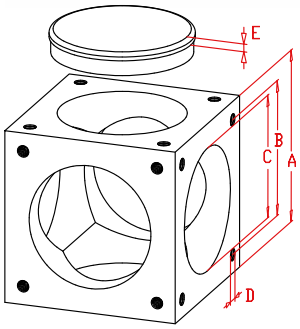

Combination cube					
Code-No.	Type	A	B	C	D
00830	30	52	35	40	M 4
00840	40	66	47	48	M 6
00860	60	92	69	62	M 8
00880	80	112	88	80	M 8
00810	100	148	112	110	M10

Cover caps			
Code-No.	Type	E	Black plastic. To cover empty cube sides.
01830	30	2	
01840	40	5	
01860	60	6	
01880	80	6	
01810	100	3	

Black anodized aluminium. Used for connecting modules at right angles or in line.

Splined shaft EL / ML / EG / DL / DS

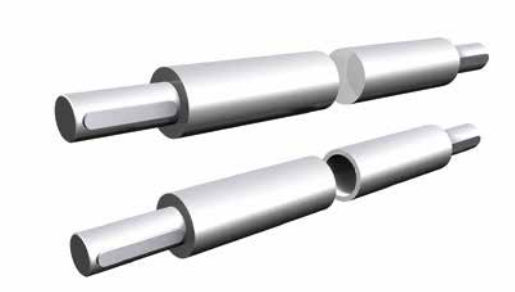

Steel splined shaft, for torque transfer between two parallel drives.
Shafts longer than 1000 mm are hollow shafts with welded journals.
For splined shafts <200mm, B1 = D applies

Code-No.	Type	A	B1	B2	C	D	L_{max}
02230	**EL/EG 30**	15	8	12	2x2x12	6_{h7}	1.500
02240	**EL/EG 40**	27	16	20	3x3x25	10_{h7}	3.000
02260	**EL/ML/EG 60** **Q 60** **D 120**	35	20	24	5x5x28	14_{h7}	3.000
02280	**EL/ML/EG 80** **Q 80** **D 160**	45	24	30	6x6x40	18_{h7}	3.000
02210	**EL/ML 100** **Q 100** **D 200**	55	30	40	6x6x50	22_{h7}	4.500
02220	**EL/QS 125**	55	40	50	8x7x50	30_{h7}	5.000

02240	0500

Sample order code:
Size 40, length L = 500 mm

B1 splined shaft < 1000 mm
B2 splined shaft > 1000 mm

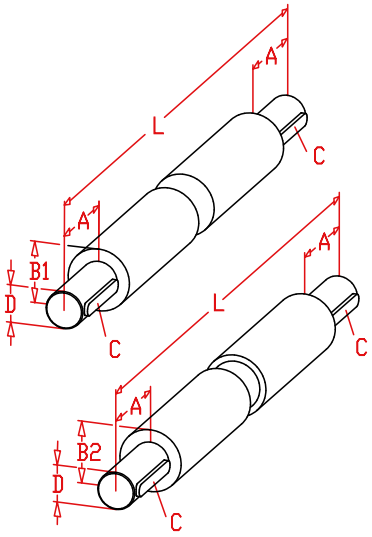

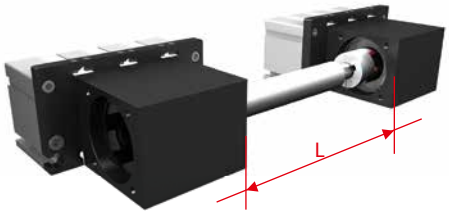

Splined shafts

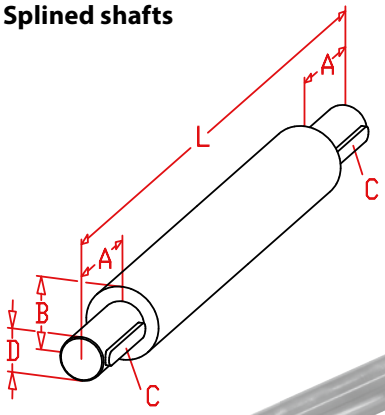

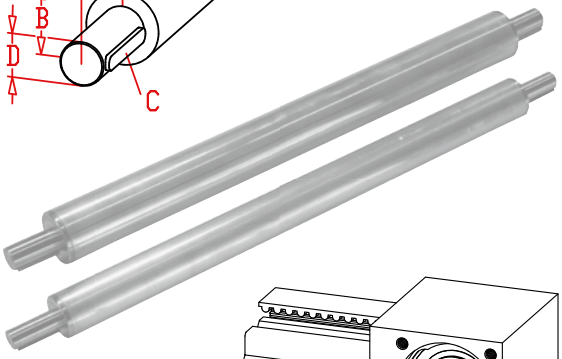

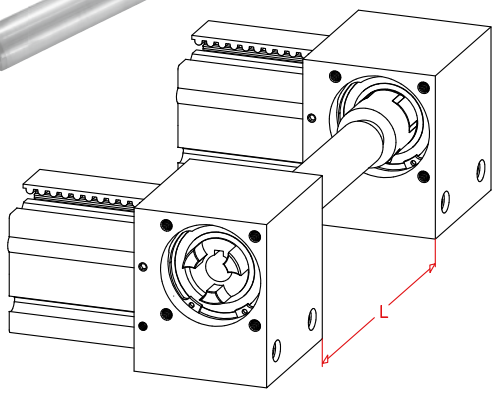

Aluminum splined shaft parallel to the torque transmission with adjustment units arranged. The splined shaft consists of an aluminum hollow shaft with bonded journals of stainless steel.

Code-No.	Type	A	B	C	D	L_{max}
02264	**EL/ML/EG 60** **Q 60** **D 120**	35	27	5x5x28	14_{h7}	3000
02284	**EL/ML/EG 80** **Q 80** **D 160**	45	40	6x6x40	18_{h7}	3000
02214	**EL/ML 100** **Q 100** **D 200**	55	50	6x6x40	22_{h7}	4500
02224	**EL/QS 125**	55	60	8x7x50	30_{h7}	5000

Sample ordering code:

Code-No.	L
02214	2000

Spindle shaft for EL/QL/QS 100 and DL/DS 200 with keyway, length 2000 mm

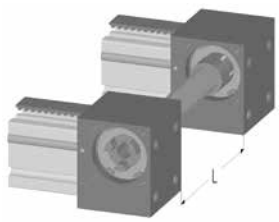

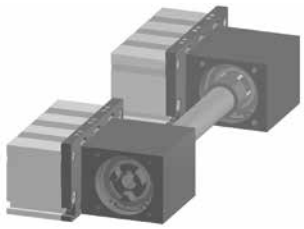

2.2

Coupling

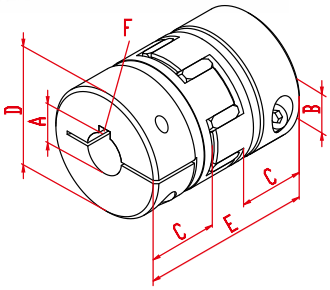

Torsionally elastic coupling with keyway and clamp. Light pre-load provides backlash-free torque transmission. Standard spider type is 98-A. For higher torques spider type 64-D could be used as an opintion.

Code-No.	Type	ØA/B (min/max)	C	D	E	F	Gear ring	Shore-Scala	Torque [Nm] T_{KN}	Torque [Nm] $T_{K\,max}$
01400-	7	3 / 7	7	14	22	DIN-key	98	A	2	4
							64	D	2,4	4,8
01401-	9	5 / 12	10	20	30		98	A	5	10
							64	D	6	12
01410-	14	5 / 16	11	30	35		98	A	12,5	25
							64	D	16	32
01420-	19	6 / 22	25	40	66		98	A	21	42
							64	D	26	52
01430-	24	10 / 28	30	55	78		98	A	60	120
							64	D	75	150
01440-	28	18 / 38	35	65	90		98	A	160	320
							64	D	200	400
01450-	38	30 / 45	45	80	114		98	A	325	650
							64	D	405	810

01401-	08	10

Sample ordering code:
Coupling type 9, ØA = 8 mm, ØB = 10 mm

Coupling for toothed belt units

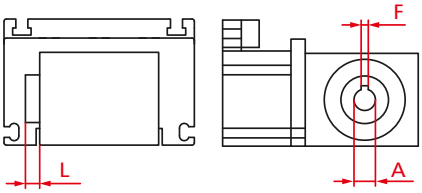

Torsionally elastic coupling with keyway and clamp. Light pre-load provides backlash-free torque transmission.

Code-No.	Type	Ø A (min/max)	L	Size	F	Gear ring	Shore-Scala	Torque [Nm] T_{KN}	Torque [Nm] $T_{K\,max}$
03400-	7	3 / 7	7	EL 30	DIN-key	98	A	2	4
						64	D	2,4	4,8
03401-	9	5 / 12	10	EL 40		98	A	5	10
						64	D	6	12
03410-	14	5 / 16	11	EL/ML 60 D 120 Q 60		98	A	12,5	25
						64	D	16	32
03420-	19	6 / 22	25	EL/ML 80 D 160 Q 80		98	A	21	42
						64	D	26	52
03430-	24	10 / 28	30	EL/ML 100 D 200 Q 100		98	A	60	120
						64	D	75	150
03440-	28	18 / 38	35	EL/QS 125		98	A	160	320
						64	D	200	400

03410-	12

Sample ordering code:
Coupling type 14, ØA = 12 mm

Coupling with tension ring

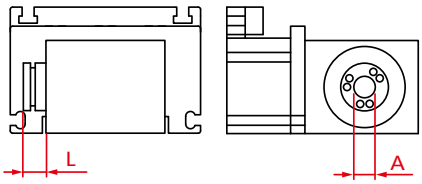

Coupling, to be clamped by tension ring.

Code-No.	Type	Ø A	L	Size	Gear ring	Shore-Scala	Torque [Nm] T_{KN}	Torque [Nm] $T_{K\,max}$
03501-	14	5, 10, 14	19	EL/ML 60 D 120 Q 60	98	A	12,5	25
					64	D	16	32
03510-	19	10, 14, 16, 19	25	EL/ML 80 D 160 Q 80	98	A	21	42
					64	D	26	52
03520-	24	19, 20, 22, 24	30	EL/ML 100 D 200 Q 100	98	A	60	120
					64	D	75	150
03530-	28	38	35	EL/QS 125	98	A	160	320
					64	D	200	400

03510-	16

Sample ordering code:
Coupling type 19, ØA = 16 mm

Accessories

Synchronous coupling

Coupling for synchronizing of two parallel units.
Light pre-load provides backlash-free torque transmission.

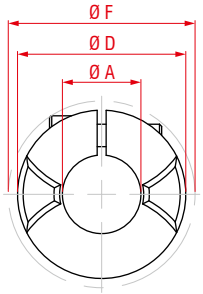

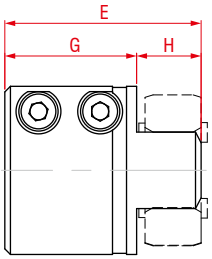

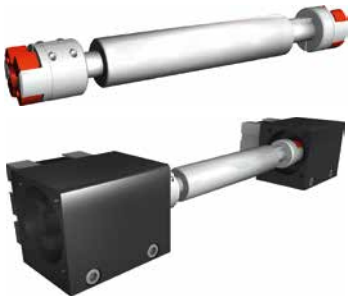

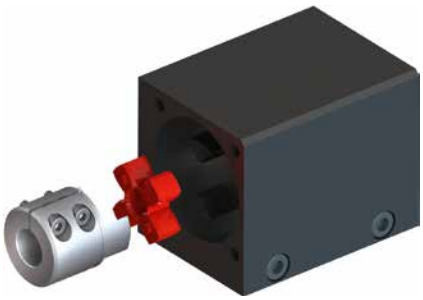

Code-No.	Type	Ø A	Ø D	E	Ø F	G	H	Gear ring	Shore-Scala	Torque [Nm]	
										TKN	TK max
034001	**7**	6	14	21	16,6	14	7	98	A	2	4
								64	D	2,4	4,8
034011	**9**	10	20	29	21,3	20	9	98	A	5	10
								64	D	6	12
03411	**14**	14	30	35	33,6	23,5	11,5	98	A	12,5	25
								64	D	16	32
03421	**19**	18	40	41	46	25	16	98	A	21	42
								64	D	26	52

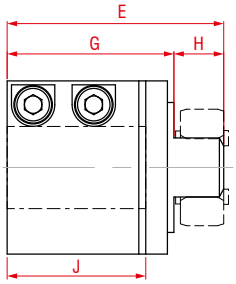

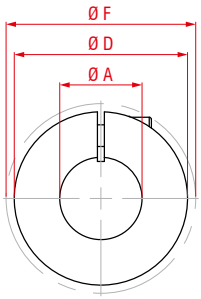

Code-No.	Type	Ø A	Ø D	E	Ø F	G	H	J	Gear ring	Shore-Scala	Torque [Nm]	
											TKN	TK max
03412	**14**	19 | 19,05 22 | 24	40	50	44	38,5	11,5	32	98	A	12,5	25
									64	D	16	32

Flange coupling

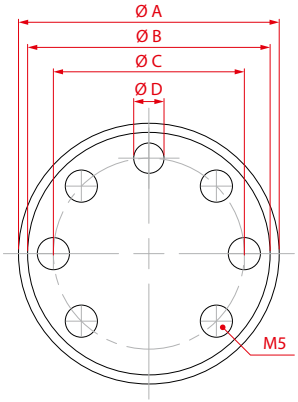

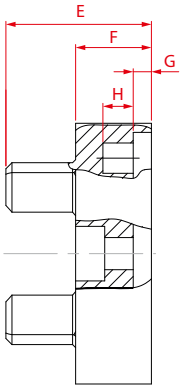

Code-No.	Type	Ø A	Ø B	Ø C	Ø D	E	F	G	H	Gear ring	Shore-Scala	Torque [Nm]	
												TKN	TK max
039265	**14**	43	40	31,5	5	24	12,5	3	5	98	A	12,5	25
										64	D	16	32

Angular gear box EL / EG

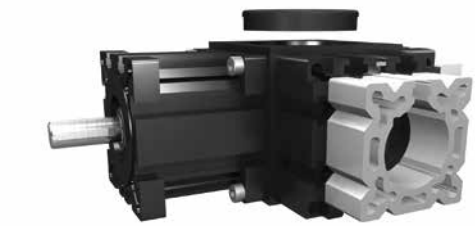

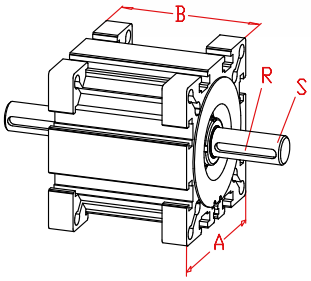

Code No.	Type	i	m	A	B	R	S Ø x l	Torque
00731	**30**	1:1	1	42	38	--	5x15	2 Nm
00741	**40**	1:1	2	58	50	3x3	10x27	5 Nm
00742	**40**	1:1,5	1,5	58	50	3x3	10x27	5 Nm
00761	**60**	1:1	2,5	82	70	5x5	14x35	15 Nm
00762	**60**	1:1,5	2	82	70	5x5	14x35	15 Nm
00781	**80**	1:1	3	102	90	6x6	18x45	25 Nm
00782	**80**	1:1,5	3	102	90	6x6	18x45	25 Nm
00711	**100**	1:1	4	130	110	6x6	22x45	30 Nm
00712	**100**	1:1,5	3	130	110	6x6	22x45	30 Nm

Complete self- centering gear. Can easily be retrofitted to any EG or EL unit. Packed with grease for lubrication.

Transmission unit EL / EG

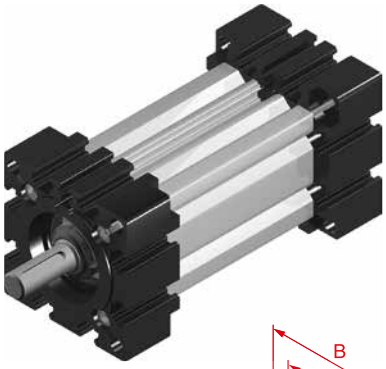

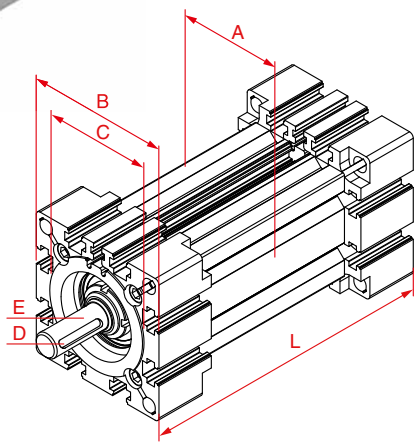

A shaft carried on ball bearings in an aluminium hollow section can be used to transmit torque or as a joining element for combining parallel linear units or as an individual element in angular operation.

Code-No.	Type	A	B	C	D	E	L_{min}	L_{max}
01931	**30**	30	42	40 x 0,7	-	5 x 15	38	3.000
01932	**30 no shaft**	30	42	40 x 0,7	-	-	38	3.000
01941	**40**	40	58	48 x 1	3 x 3	10 x 27	50	6.000
01942	**40 no shaft**	40	58	48 x 1	-	-	50	6.000
01961	**60**	60	82	62 x 1	5 x 5	14 x 35	100	6.000
01962	**60 no shaft**	60	82	62 x 1	-	-	100	6.000
01981	**80**	80	102	80 x 1	6 x 6	18 x 45	90	6.000
01982	**80 no shaft**	80	102	80 x 1	-	-	90	6.000
01911	**100**	100	130	110 x 1	6 x 6	22 x 45	110	6.000
01912	**100 no shaft**	100	130	110 x 1	-	-	110	6.000

01941	0750

Sample order code: Size 40, length L = 750 mm

Toothed pulley HTD

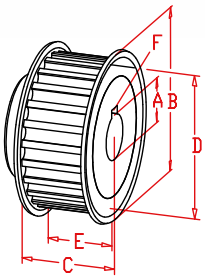

Material St 50, secured with key.

Code-No.	Type	A	B	C	D	E	F	Number of teeth	Spa-cing
00450	**EL/EG 30**	6	23	26	18,3	15	2x2	20	3x15
00451	**EL/EG 40**	10	36	26	30,7	15	3x3	20	5x15
00452	**EL/EG 60 DL/DS120**	14	44	38	40,2	25	5x5	26	5x25
00453	**EL/EG 80 DL/DS160**	18	54	38	49,8	25	6x6	32	5x25
00454	**EL100**	22	66	48	61,1	38	6x6	24	8x30

Toothed belt endless HTD

Code-No.	Type	Belt	Tensile force
00550	**EL/EG 30**	3M15	200 N
00551	**EL/EG 40**	5M15	390 N
00556	**EL/EG 40**	5M09	298 N
00552	**EL/EG 60**	5M25	894 N
00553	**EL/EG 80**	5M25	894 N
00554	**EL 100**	8M30	1070 N
00555	**EL 100**	8M20	980 N

00551	0700

Sample order code:
Belt 5M15 perimeter: 700 mm

Parallel transfer unit for spindle drives

DL / DS

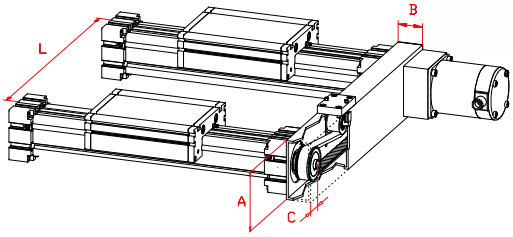

EL / EG / Q

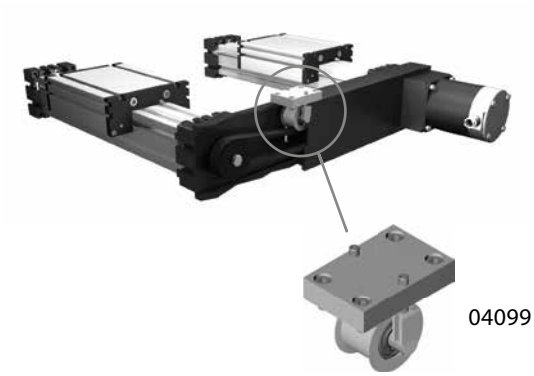

Black anodized aluminium tube with plastic end caps, pulleys fixed with keys or tension rings. Spindle centers are multiples of 5 or 8 mm, according to belt pitch.

Code-No.	Type	A	B	C	L_{max}	Belt
T13030	**EL/EG 30**	50	25	25	1.200	5M 9
T13040	**EL/EG 40**	80	40	30	1.500	5M 15
T13060	**EL/EG/Q 60**	100	50	42	2.000	5M 25
T13061	**DL/DS 120 ∗**	60	50		2.000	5M 25
T13080	**EL/EG/Q 80**	120	50	52	2.000	5M 25
T13081	**DL/DS 160 ∗**	80	50		2.000	5M 25
T13010	**EL/Q 100**	160	80	66	3.000	8M 30

∗ Parallel transfers are special disigned parts. Demensions given in the documentation are samples.

T13060	500

Sample ordering code: Center-distance of axis L = 500 mm

For center-distances higher than 800mm you have to use an additional tensioning device code-number 04099.

Tensioning device	
Code-No.	**B**
04099-40	40
04099-50	50
04099-60	60

2.2

Cable conduit EL / ML / QS

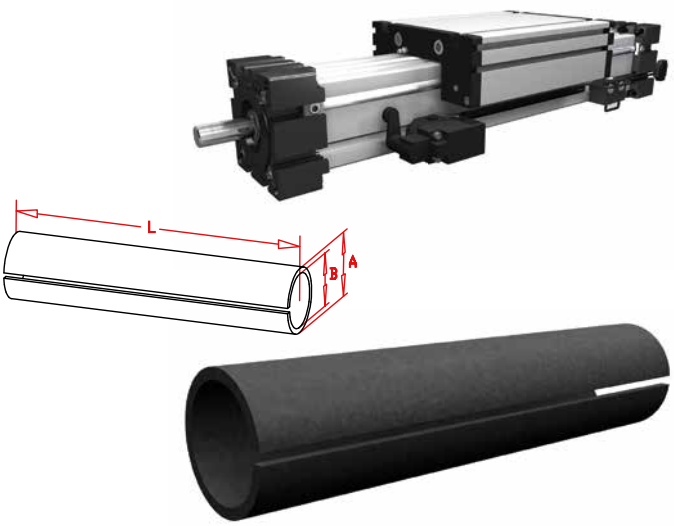

Slotted plastic tube for cabling directly onto body of linear unit. The tube can simply be pressed into the half-round slot in the body and will be securely retained there.

Code-No.	Type	A	B	L
02806	**EL 40**	6	4	max. 50m
02810	**EL/ML/Q 60**	10	7,5	max. 50m
02812	**EL/ML/Q 80**	12	8,5	max. 50m
02816	**EL/ML/Q 100**	16	12	max. 50m
02820	**EL/QS 125**	20	15	max. 50m

02816	1000

Sample ordering code:
Plastic tube for EL 100, 1000 mm long.

Cable chain

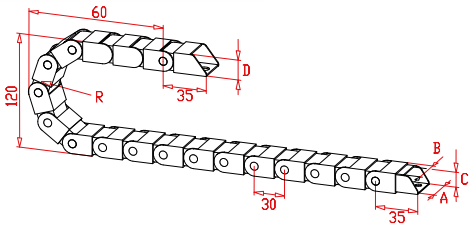

Black plastic, one floating and one fixed mounting bracket. The inner face opens like a zip, enabling cable to be inserted easily.

Code-No.	Type	Name	A	B	C	D
02115	**15**	Cable chain	25,5	15	18	23
02125	**25**	Cable chain	35,5	25	18	23
02138	**38**	Cable chain	48	38	18	23
02150	**50**	Cable chain	60	50	18	23
02116	**15**	fixing brackets (2 pieces)				
02126	**25**	fixing brackets (2 pieces)				
02139	**38**	fixing brackets (2 pieces)				
02151	**50**	fixing brackets (2 pieces)				

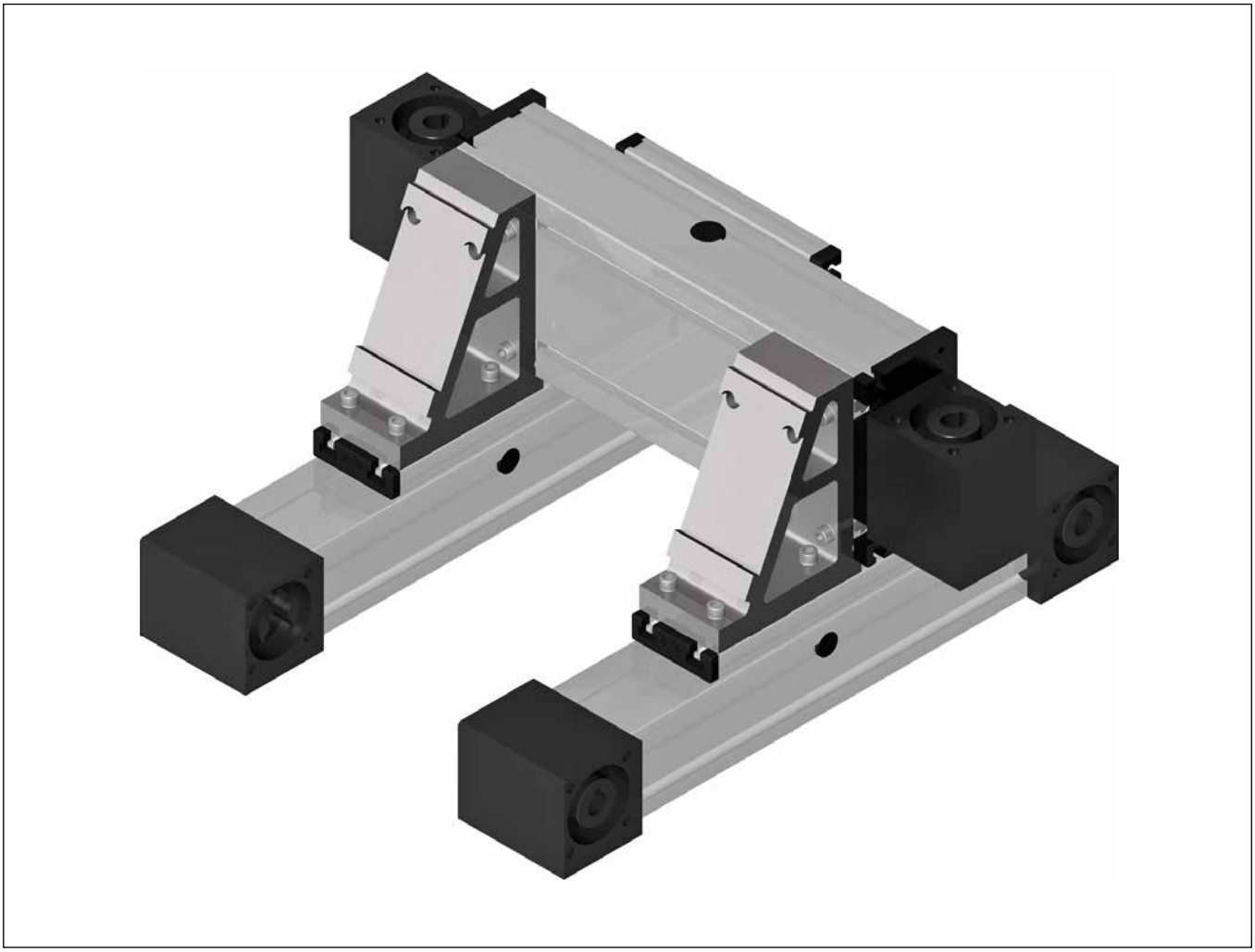

Mounting profiles

3.2

Angular bracket profile

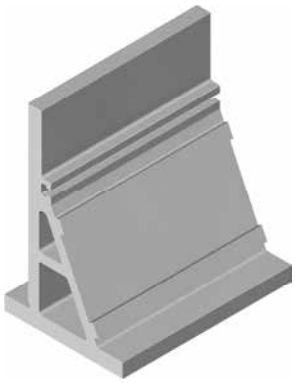

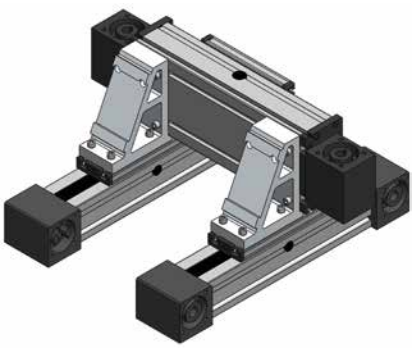

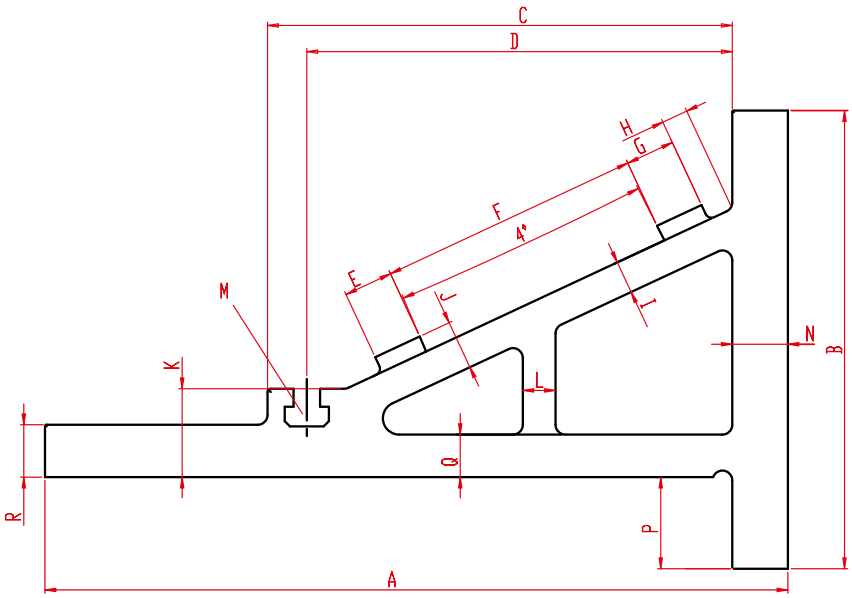

Version (x)			
0	uncoated, without machining	1	anodized, without machining

Function:
Various assemblies and axis types can be connected to the angular bracket profile. It can also be used to reinforce self-supporting positioning systems or to mount portals on profile frames.

Code-No.	A	B	C	D	E	F	G	H	I	J	K	L	M for	N	P	Q	R	m [kg/m]	$L_{max.}$
4200x	227	140	142	130	15	80	15	8,05	10	15	27	10	M 6	17	28	13	16	19,9	3000

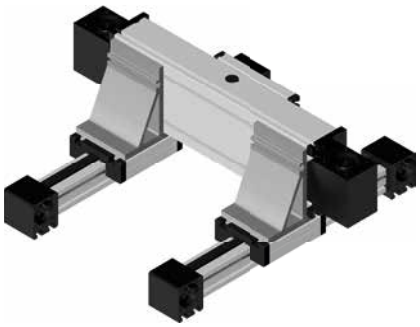

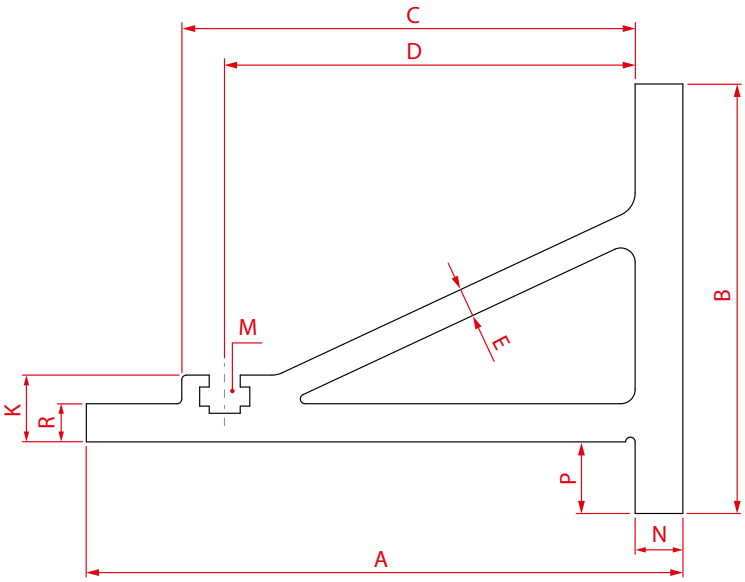

Version (x)			
0	uncoated, without machining	1	anodized, without machining

Function:
Various assemblies and axis types can be connected to the angular bracket profile. It can also be used to reinforce self-supporting positioning systems or to mount portals on profile frames.

Code-No.	A	B	C	D	E	K	M for	N	P	R	m [kg/m]	$L_{max.}$
4210x	125	90	95	86	6	14	M6	10	15	8	6,43	3000

Mounting profiles

Angular bracket

Dimensions (mm)

Angular bracket for combination of Q60 and D120

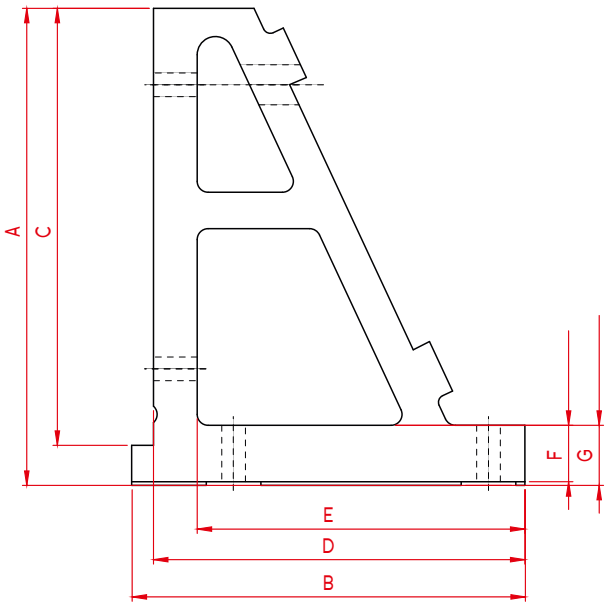

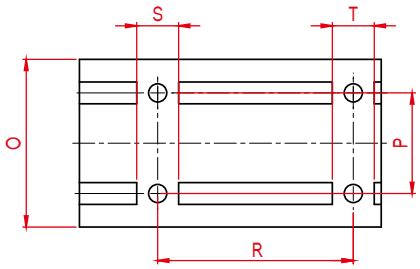

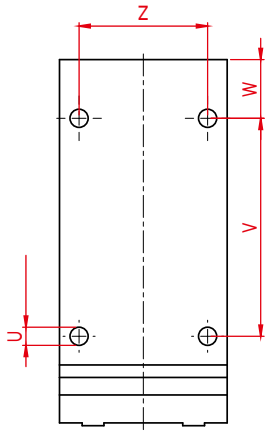

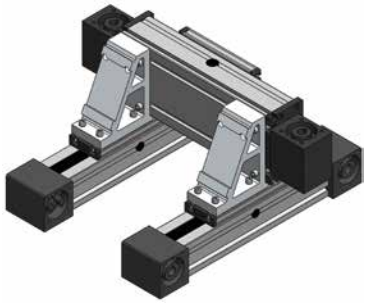

Function:
Various assemblies and axis types can be connected to the angular bracket. It can also be used to reinforce self-supporting positioning systems or to mount portals on profile frames.

Code-No.	A	B	C	D	E	F	G	O	P	R	S	T	U	V	W	Z	[kg/m]
038 060 120	131	108	120	102	90	15,5	16,5	60	36	70	15	15	6,5	78	21	46	0,765 kg

Angular bracket for combination of Q80 and D160

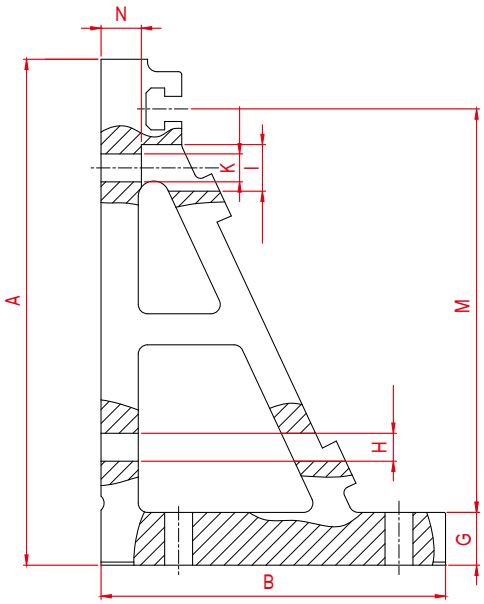

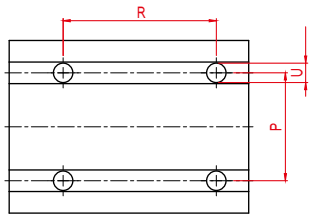

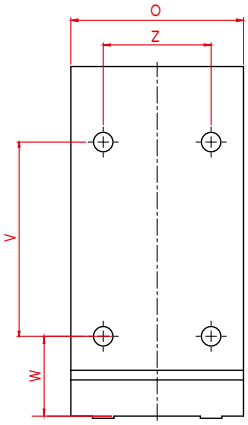

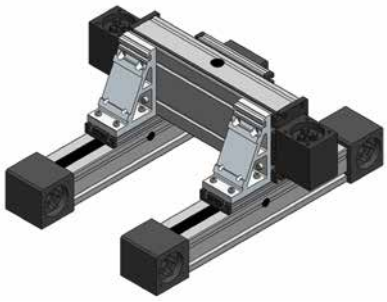

Function:
Various assemblies and axis types can be connected to the angular bracket. It can also be used to reinforce self-supporting positioning systems or to mount portals on profile frames.

Code-No.	A	B	G	H	I	K	M	N	R	O	P	U	V	W	Z	[kg/m]
038 080 160	163	111	17	9	15	9	130	13	71	80	50	9	90	37	50	1,174 kg

3.2

Angular bracket LL 60 / LS 60

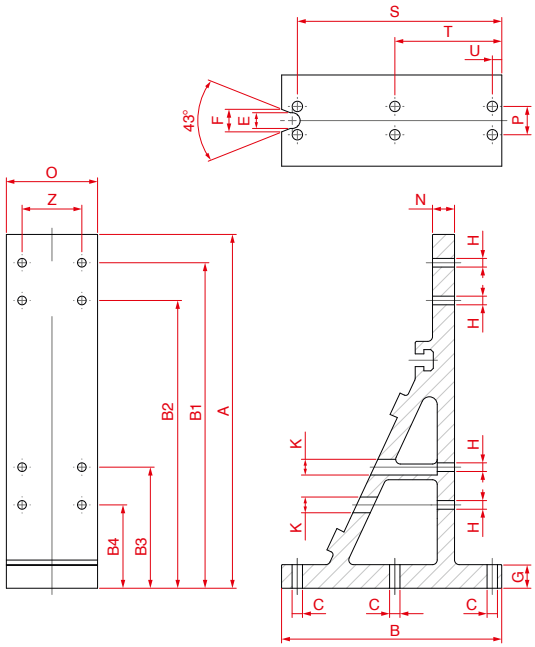

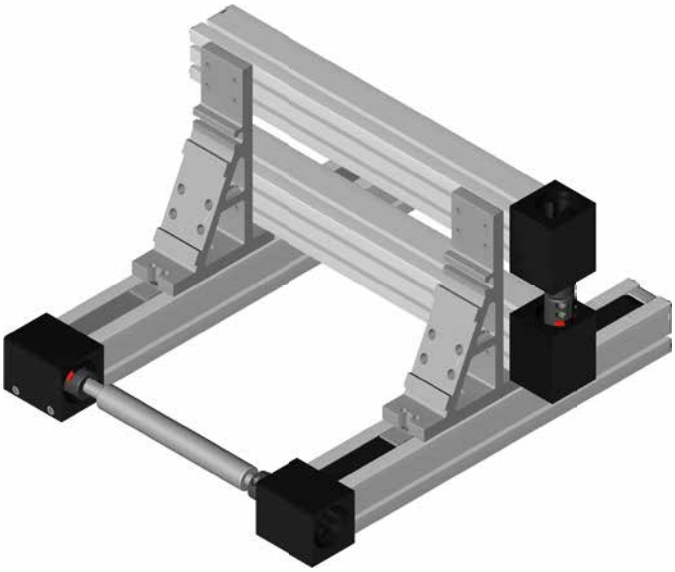

Function:
This mounting bracket can be used to link LL 60 and LS 60 axis types.

Code-No.	A	B	B1	B2	B3	B4	C	E	F	G	H	K	N	O	P	S	T	U	Z	m [kg/m]
038L602L60	225	140	207	183	77	53	6,60	10	14,33	15	Ø 5,5	Ø 10	12	58	18	134	72	10	38	1,0 kg

Mounting profiles

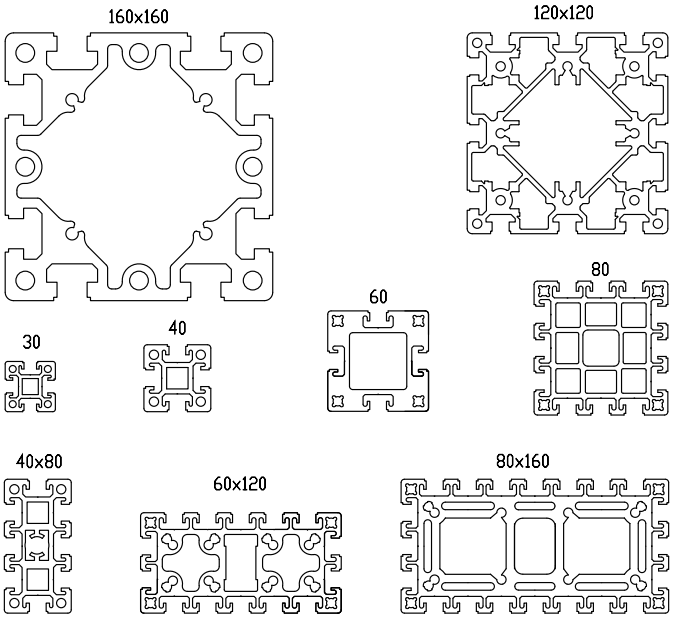

Code-No.	Type	Mass [kg/m]
05030	30	0,917
05040	40	1,780
05060	60	3,880
05048	40 x 80	3,340
05080	80	5,817
05061	60 x 120	7,500
05062	120 x 120	11,500
05081	80 x 160	12,096
05082	160 x 160	21,955

Code-No. Length in mm

05030	2000

Sample ordering code: Mounting profile Type 30, 2.000 mm long.

Mounting profiles

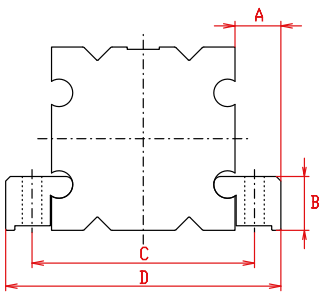

Code-No.	Type	A	B	C	D	m [kg/m]	$L_{max.}$
40098	30	12	10	41	54	0,302	3.000
40068	40	16	13	54	72	0,53	3.000
40059	60	18	18	77	96	0,93	3.000
40079	80	20	23,5	97	120	1,37	3.000
40088	100	22	30,5	120	144	2,07	3.000
40108	125	27,5	40	149	180	3,39	3.000

Code-No. Length in mm

40059	2000

Sample ordering code: Mounting profile Type 60, 2.000 mm long.

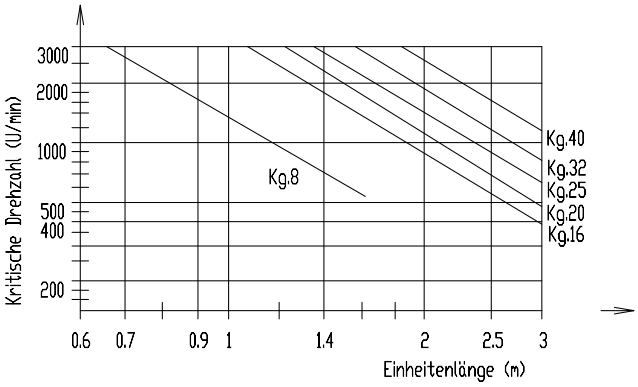

Specifications

Calculation of toothed belt

Calculation of the max. acceleration

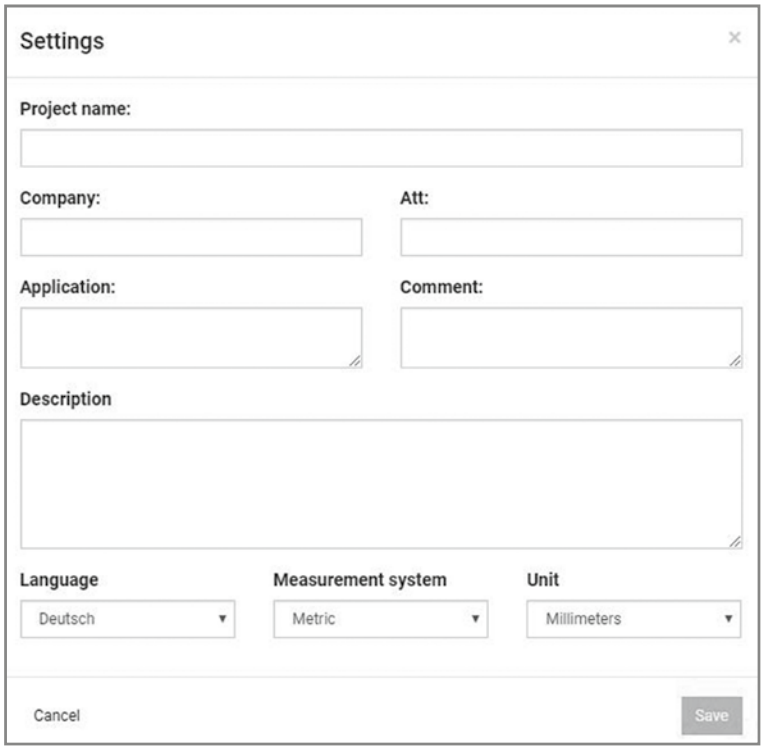

To calculate your load data, please use the timing belt calculation of Continental:

www.conti-professional.com

Act as follows:

- Register an account
- Create a new project
- Select **"Open ended belts"** in the project editor
- Select drive type **"Linear slide"**
- Enter tooth belt type and parameters
- Calculate

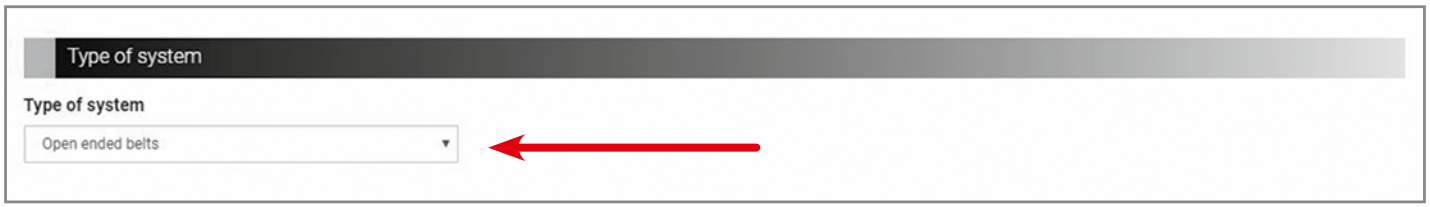

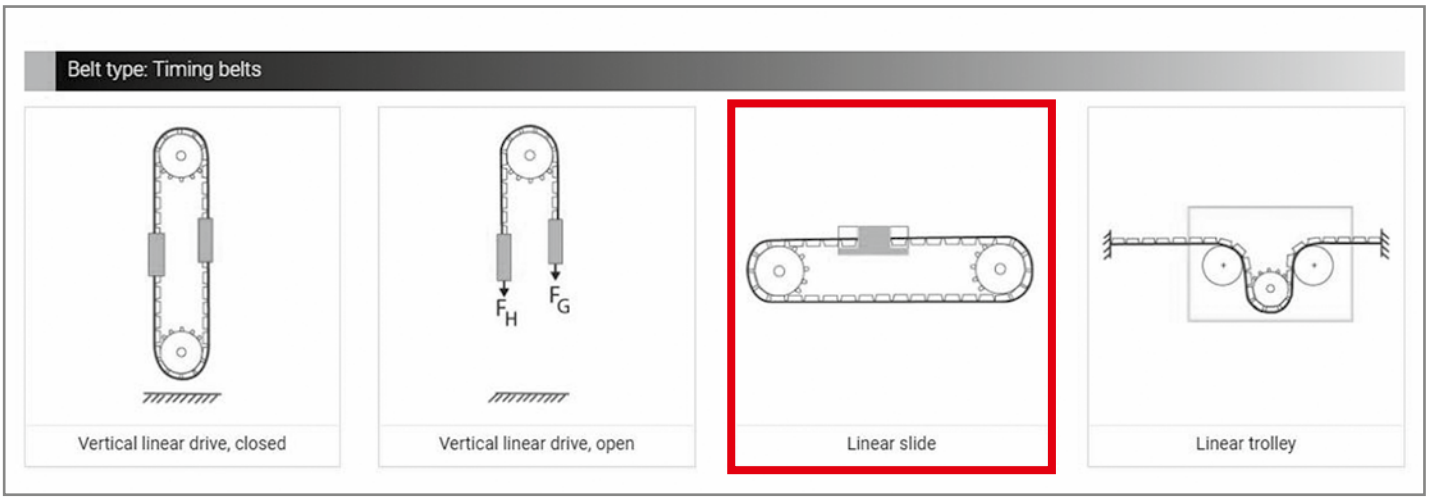

Calculation of toothed belt

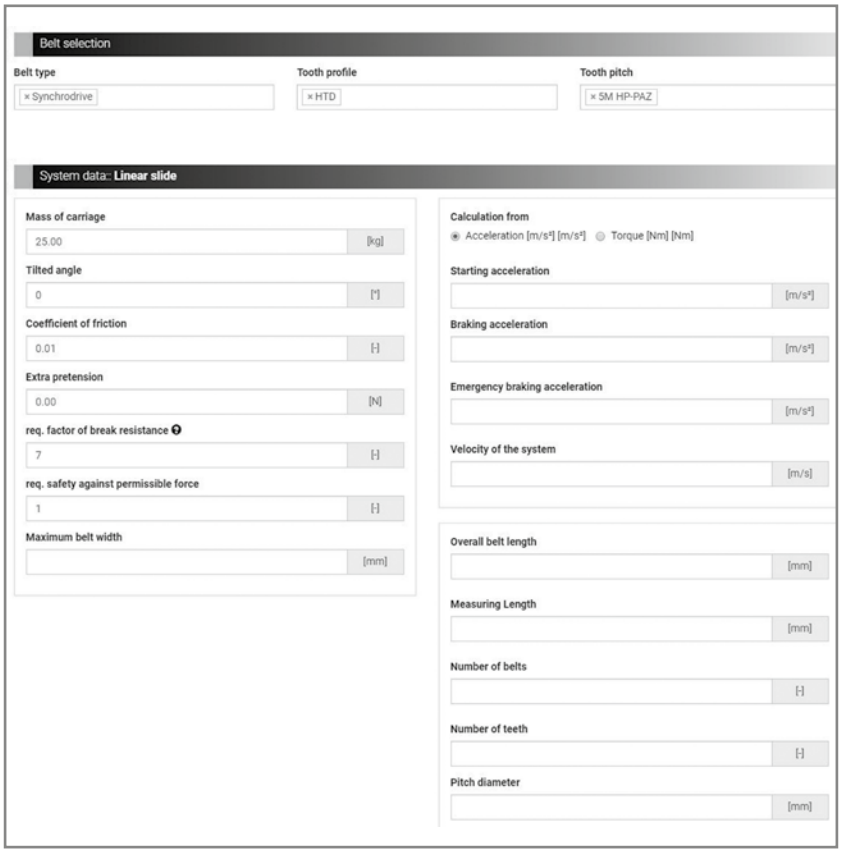

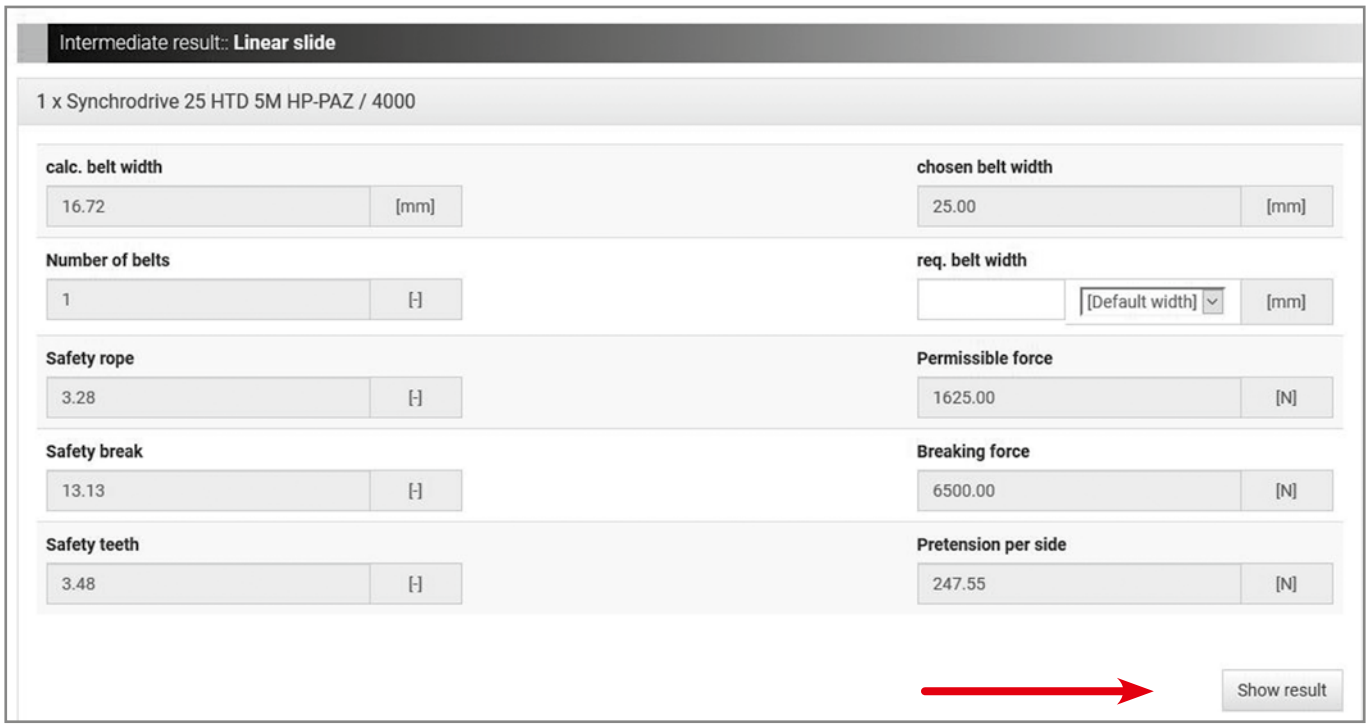

Calculation of toothed belt

Resulting report:: **Vertical linear drive, closed**

Given data

Mass of carriage	MH	25.00	[kg]
Mass of counterweight	MG		[kg]
Number of teeth	z	26	[-]
Overall belt length	LB	4000.00	[m]
req. factor of break resistance	sgefb	7	[-]
req. safety against permissible force	sgefzul	1	[-]

Carriage downwards - emergency stop

Acceleration force of carriage	FHbes	212.50	[N]
Weight force of carriage	FHgew	245.25	[N]
Acceleration force of counterweight	FGbes	0.00	[N]
Weight force of counterweight	FGgew	0.00	[N]
Force at motor shaft	Fmot	457.75	[N]
Braking torque	Mmot	9.47	[Nm]
Maximum load	Fmax	370.25	[N]

Load values

Force during start	Fanf.	370.25	[N]
Force during braking	Fbrems	457.75	[N]
Required pretension	FV	457.75	[N/Tr.]
Measuring Length below mass	L_p	1300.00	[mm]
Set-Frequency	f_{stat}	25.83	[Hz]
Bearing load in motor shaft	FLmot	1373.25	[N]
Bearing load idler	FLuml	1743.50	[N]
Belt force 1/1	Ftr	686.63	[N]
Maximum belt force	Ftr max	915.50	[N]
Safety rope	Sr	1.77	[-]
Safety break	St	7.10	[-]
Safety teeth	Sz	1.88	[-]
Permissible force	Fzul	1625.00	[N]

Carriage upwards

Acceleration force of carriage	FH_{bes}	-125.00	[N]
Weight force of carriage	FH_{gew}	245.25	[N]
Acceleration force of counterweight	FG_{bes}	0.00	[N]
Weight force of counterweight	FG_{gew}	0.00	[N]
Force at motor shaft	F_{mot}	457.75	[N]
Motor torque	M_{mot}	7.66	[Nm]
Maximum load	F_{max}	457.75	[N]

Kinematic values

Velocity	v	2.00	[m/s]
Relative starting acceleration	aan r	5.00	[m/s²]
Absolute starting acceleration	aan a	14.81	[m/s²]
Relative braking acceleration	abr r	8.50	[m/s²]
Absolute braking acceleration	abr a	18.31	[m/s²]
Braking distance	sbr	0.24	[m]
Braking time	tbr	0.24	[s]
R.P.M.	n	923.08	[1/min]

Specifications

Weights

Sizes	Guide body profile	Internal profile	guide rod	Belt	per pulley	Toothed rack	Standard carriage	Carriage profile	Coupling
30	1,08 kg/m	-	0,15 kg/m	0,037 kg/m	0,06 kg	-	0,176 kg	1,78 kg/m	0,007 kg
40	1,92 kg/m	-	0,22 kg/m	0,074 kg/m	0,14 kg	0,70 kg/m	0,520 kg	3,42 kg/m	0,010 kg
60	3,86 kg/m	-	0,61 kg/m	0,123 kg/m	0,39 kg	4,30 kg/m	1,565 kg	7,66 kg/m	0,040 kg
60S	3,86 kg/m	-	0,61 kg/m	0,123 kg/m	0,39 kg	4,30 kg/m	2,420 kg	8,60 kg/m	0,040 kg
80	7,41 kg/m	-	0,88 kg/m	0,256 kg/m	1,04 kg	6,20 kg/m	2,644 kg	12,96 kg/m	0,085 kg
80S	7,41 kg/m	-	0,88 kg/m	0,256 kg/m	1,04 kg	6,20 kg/m	3,520 kg	13,80 kg/m	0,085 kg
100	11,1 kg/m	-	1,58 kg/m	0,355 kg/m	0,81 kg	6,20 kg/m	6,550 kg	19,40 kg/m	0,200 kg
125	15,91 kg/m	-	2,45 kg/m	0,480 kg/m	1,54 kg	-	12,100 kg	26,63 kg/m	0,395 kg
DL 120	5,50 kg/m	1,52 kg/m	0,22 kg/m	0,123 kg/m	0,39 kg	-	1,100 kg	4,19 kg/m	0,040 kg
DL 160	10,33 kg/m	2,66 kg/m	0,61 kg/m	0,256 kg/m	0,90 kg	-	3,280 kg	7,99 kg/m	0,085 kg
DL 200	16,08 kg/m	3,48 kg/m	0,61 kg/m	0,355 kg/m	0,688 kg	-	4,950 kg	11,05 kg/m	0,200 kg
DS 120	5,06 kg/m	1,52 kg/m	0,65 kg/m	0,123 kg/m	0,39 kg	-	0,920 kg	5,57 kg/m	0,040 kg
DS 160	10,52 kg/m	2,66 kg/m	2,21 kg/m	0,256 kg/m	0,86 kg	-	2,250 kg	10,01 kg/m	0,085 kg
DS 200	14,16 kg/m	3,48 kg/m	3,21 kg/m	0,355 kg/m	1,83 kg	-	5,345 kg	15,01 kg/m	0,200 kg
QL 60	3,29 kg/m	-	0,22 kg/m	0,123 kg/m	0,39 kg	-	0,456 kg	2,05 kg/m	0,040 kg
QL 80	7,05 kg/m	-	0,61 kg/m	0,256 kg/m	0,90 kg	-	1,229 kg	3,85 kg/m	0,085 kg
QL 100	10,48 kg/m	-	0,61 kg/m	0,355 kg/m	1,83 kg	-	2,920 kg	5,49 kg/m	0,200 kg
QS 60	3,74 kg/m	-	1,45 kg/m	0,123 kg/m	0,39 kg	-	0,860 kg	2,05 kg/m	0,040 kg
QS 80	6,82 kg/m	-	2,21 kg/m	0,256 kg/m	0,90 kg	-	2,339 kg	3,85 kg/m	0,085 kg
QS 100	10,56 kg/m	-	3,21 kg/m	0,355 kg/m	1,83 kg	-	4,320 kg	5,49 kg/m	0,200 kg
QS 125	16,08 kg/m	-	4,47 kg/m	0,480 kg/m	0,60 kg	-	5,544 kg	10,03 kg/m	0,395 kg
ALL	27,45 kg/m	-							
QST/K 60	2,77 kg/m		1,45 kg/m					3,39 kg/m	
QST/K 80	5,47 kg/m		2,21 kg/m					5,88 kg/m	
QST/K 100	8,48 kg/m		3,21 kg/m					9,54 kg/m	

Diagram for maximum rpm of spindle units

ballscrew units

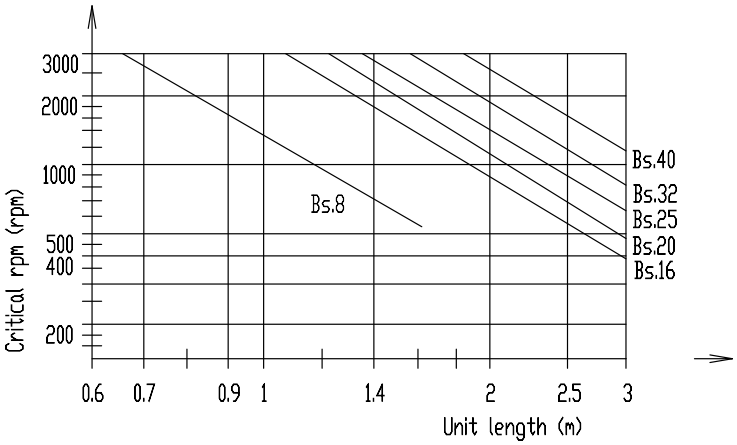

trapezoidal units

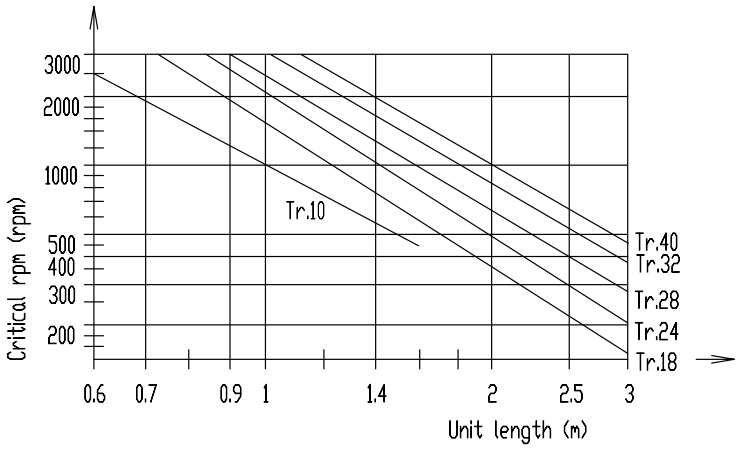

$n_{max.}$ = table value x 0,8

Specifications

Calculation of torsional twist

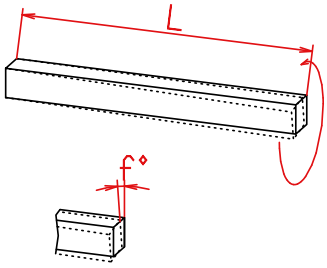

$f° = L \times M_{t\,max.} \times I_p$ $\left[\frac{° \times Nm \times m}{Nm \times m}\right]$

f°= max. twisting angle	(°)
L = unit length	(m)
$M_{t\,max}$= max. torque	(Nm)
I_p= see table	(°/Nm²)

Aluminium profiles
Stiffness F25 (250 N/mm²)
Thickness of anodizing coat 20 to 30 µm

4.2

Size	I_p Faktor	Size	I_p Faktor	Size	I_p Faktor
EL 30	0,49000 °/Nm x m	DL 120	0,03282 °/Nm x m	QL 60	0,02995 °/Nm x m
EL 40	0,18000 °/Nm x m	DL 160	0,01286 °/Nm x m	QL 80	0,01257 °/Nm x m
EG 40	0,14000 °/Nm x m	DL 200	0,00787 °/Nm x m	QL 100	0,00705 °/Nm x m
EL 60	0,05765 °/Nm x m	DS 160	0,01336 °/Nm x m	QS 60	0,03797 °/Nm x m
EG 60	0,04387 °/Nm x m			QS 80	0,01563 °/Nm x m
EL 80	0,01463 °/Nm x m			QS 100	0,00644 °/Nm x m
EG 80	0,01511 °/Nm x m				
EL 100	0,00492 °/Nm x m				
EL 125	0,00616 °/Nm x m				

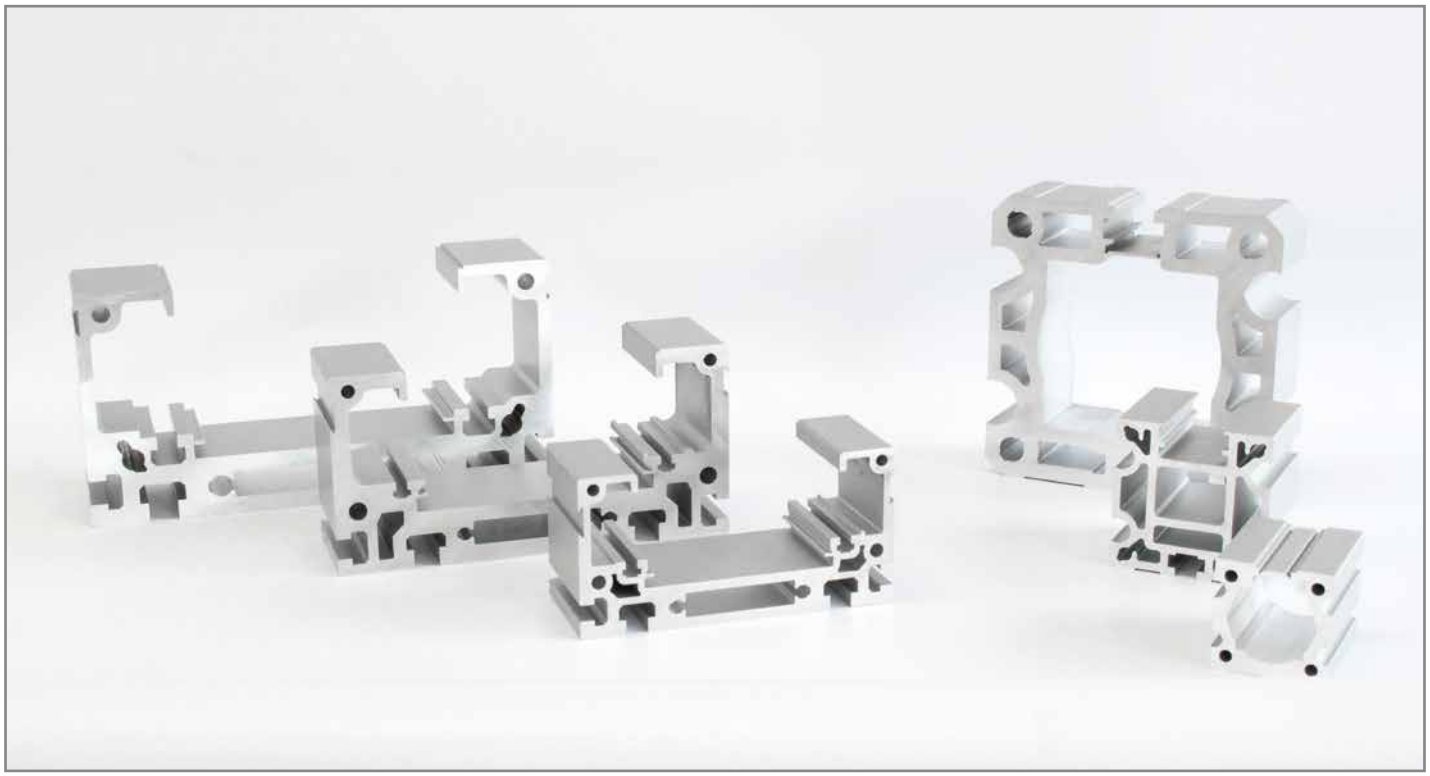

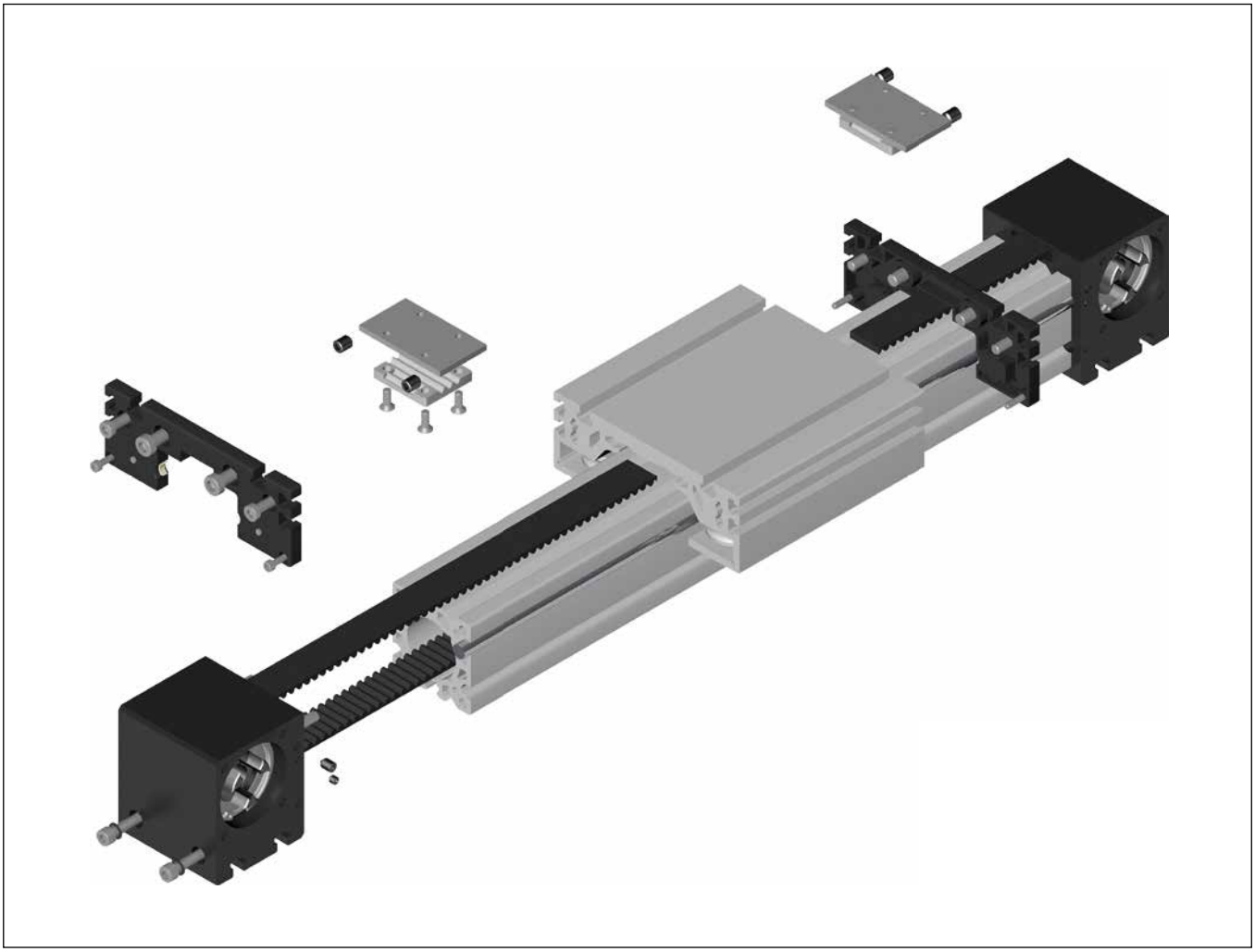

Service manuals

EG / EL - units

Spindle lubrication EG 30 / EL 30

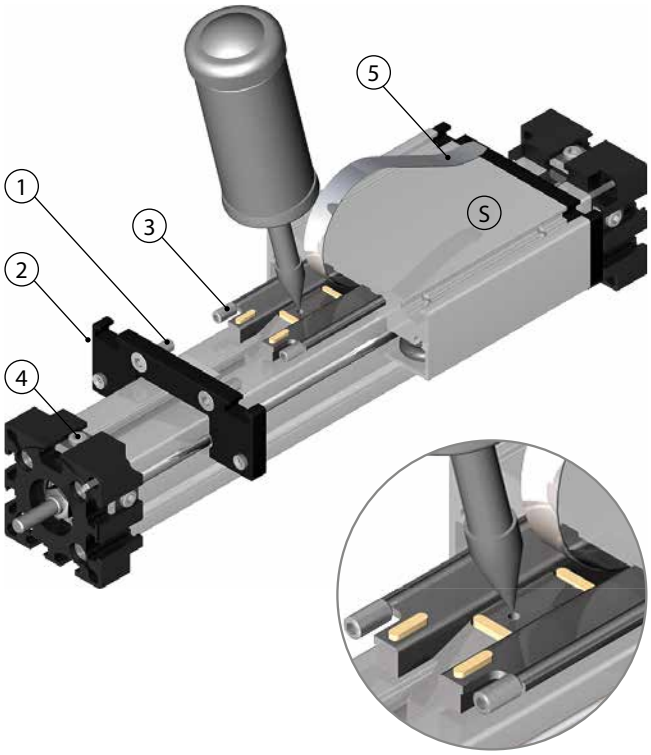

- Unscrew the cylindric screws **(1)** and push the wiper end plate **(2)** to the side.
- Unbend screws **(3)**, push slide **(S)** to other side
- Unscrew the grub screw **(4)** and lift the coverband **(5)**.
- Grease can be filled now with grease gun.

  For mass of greasing look at table below.

Type	Pitch	Regreasing
30	Kg 08 x 2,5	0,1 g

Spindle lubrication EG 40, 60, 80 / EL 60, 80, 100, 125

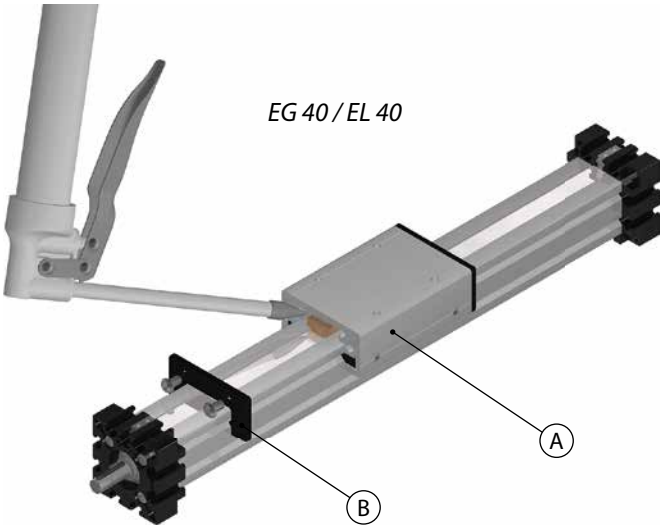

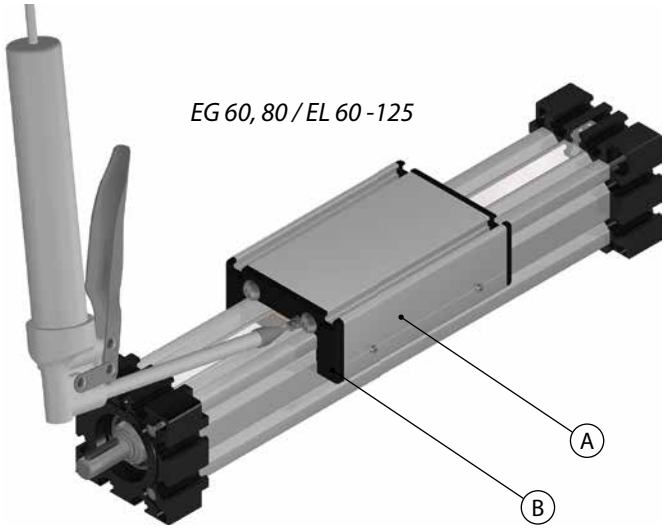

Type	Pitch	Regreasing	Type	Pitch	Regreasing
30	Kg 08 x 2,5	0,1 g	**60**	Kg 20 x 05	3,00 g
40	Kg 16 x 05	1,33 g	**80**	Kg 25 x 25	3,00 g
40	Kg 16 x 10	0,84 g	**80 / 100**	Kg 32 x 05	3,00 g
60	Kg 25 x 05	2,00 g	**80 / 100**	Kg 32 x 10	4,00 g
60	Kg 25 x 10	3,00 g	**100**	Kg 32 x 32	4,00 g
60	Kg 20 x 20	3,00 g	**125**	Kg 40 x 10	4,00 g

(A) carriage (B) wiper end plate

EG / EL 40
with greasing nipple behind the wiper end plate

EG 60, 80 / EL 60 - 125
with external greasing nipple

For mass of greasing look at table below.
Spindle greasing every 500-1000 working hours.

EH / EL / ML - units

Guiding rods lubrication EL | ML

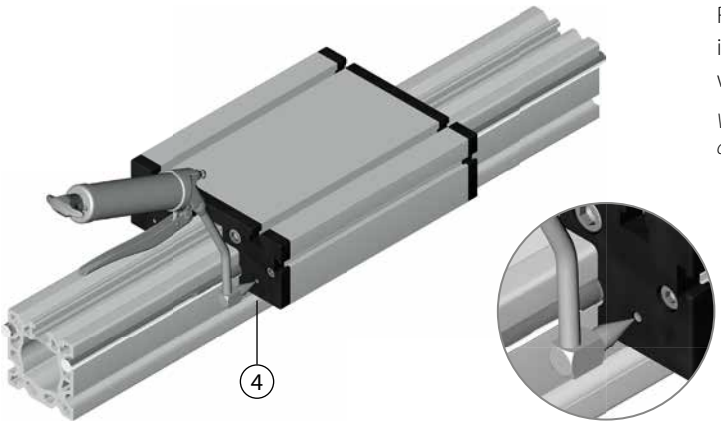

Rods will be greased by the strippers of carriage. There are 2 oil nipples in each wiper end plate **(4)**, where the tanks for the strippers can be filled with an oil gun.

Viscosity of oil: 200 mm²/s, T= 40° C. Interval of greasing depends on environmental conditions, min. once a month. Minimum stroke must be same than length of slide.

Rollers size lubrication EL 100, 125 | ML 100

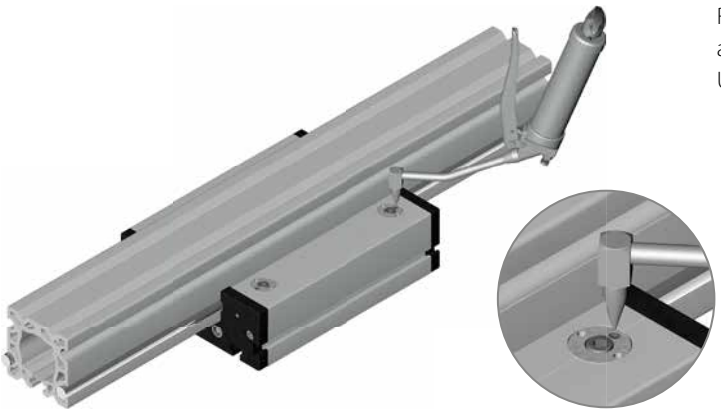

Rollers should be greased each 1.000 working hours or each 6 months with a grease gun. For greaser nipple look at the eccentric at carriage bottom. Use roller grease.

Lubrication EHTX / EHKX 60, 80

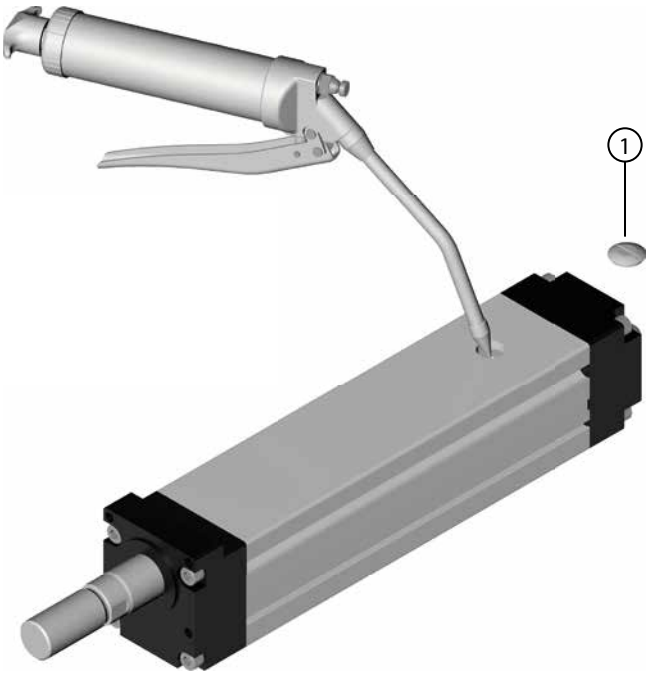

(1) = cover cap (4) = greasing nipple

- Dismount cover cap **(1)**.
- Drive the carriage to the service position until you can see the greasing nipple **(4)** in the lubrication hole.
- Re-greasing with grease gun.

For mass of greasing look at table below.
Spindle greasing every 500-1000 working hours.

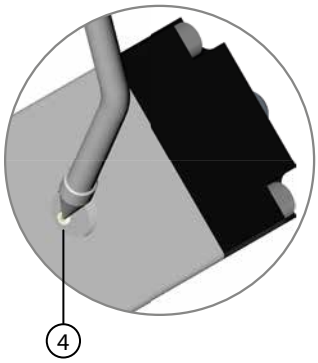

Type	Pitch	Regreasing
60	Tr 18 x 4	1,33 g
60	Tr 18 x 8	0,84 g
80	Tr 24 x 5	2,00 g
80	Tr 24 x 10	3,00 g
80	Kg 25 x 5	2,00 g
80	Kg 25 x 10	3,00 g

Adjusting the carriage EG 30, 40, 60, 80

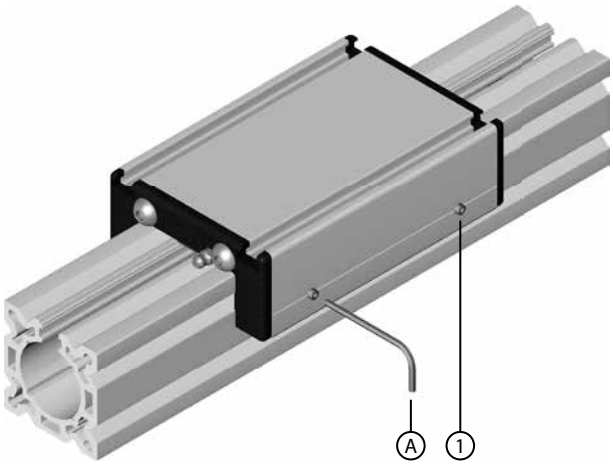

- Fix all 4 grub screws **(1)** with a hexagon socket wrench **(A)** at a centered position of the carriage.
- Loose all grub screws **(1)** about ⅛ rotation and hit the carriage carefully free by a soft-head hammer.
- Pay attention to a centered position of the carriage. (Check by a caliper.)

The grub screws **(1)** shoud be locked by bonding.

Changing cover band EL | EG 30, 40

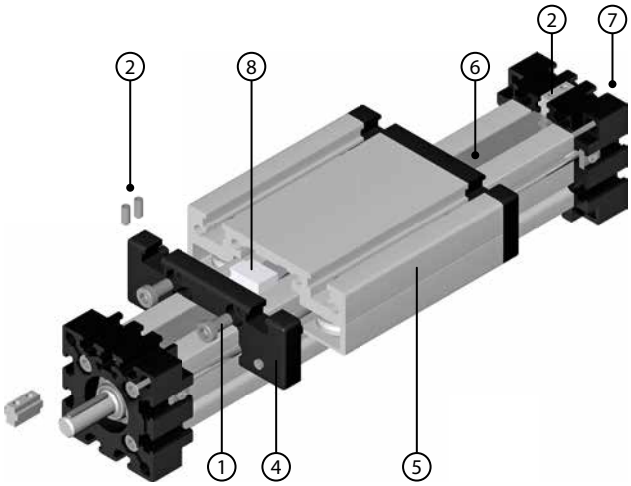

- Unscrew cylindric screws **(1)** on both sides of carriage **(5)**.
- Push wiper endplate **(4)** to the side.
- Unscrew the screws **(2)** on both bearing parts and remove the cover band clamp **(3)**.
- Pull out the coverband **(6)**.

- Mount the new cover band and the cover band clamp **(3)**. Then fix the screws **(2)** on one side of bearing block **(7)**, tense the band with a pointed pliers and fix with the screws **(2)**.
- Mount the wiper end plates **(4)** with the cylindric screws **(1)** on both sides of carriage **(5)**. Pay attention to the seat of the slides **(8)**.

Changing cover band EL 100, 125

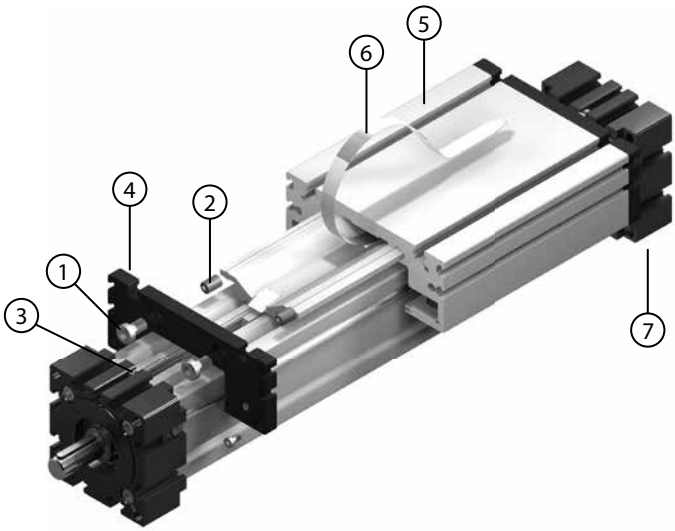

- Unscrew cylindric screws **(1)**, push plastic wiper endplate **(4)** to one bearing-block **(7)**.
- Unbend grub screws **(2)**, push carriage **(5)** to other side.
- Unscrew screws **(3)** and pull out the coverband **(6)**.
- Mount the new coverband, fix the screws **(3)** at one side, tense the band with a pointed pliers and fix the screws **(3)**.
- Fix the carriage **(5)** by the grub screws **(2)**and mount the wiper end plate **(4)**.

Changing cover band ELHZ / ELVZ 60, 80

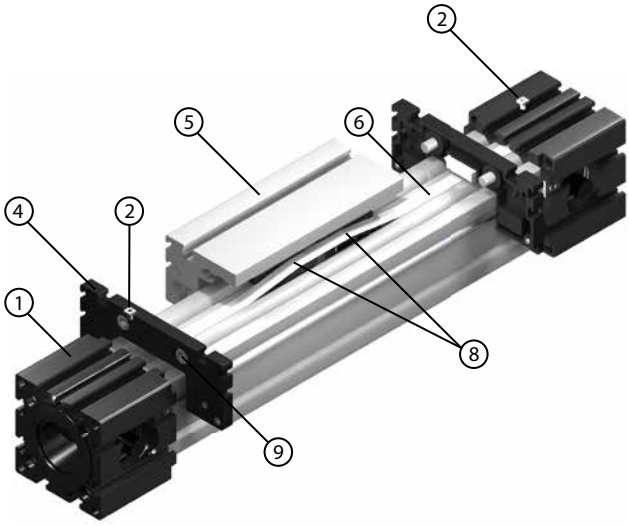

- Unscrew cylindric screws **(9)** on both sides of carriage **(5)**.
- Push the wiper end plates **(4)** to the side.
- Unscrew the grub screwes **(2)** and pull out the old coverband **(6)**.
- Push the new coverband under both sliding block **(8)** in the carriage **(5)** and wiper end plates **(4)** into the bearing block **(1)**.
- Fix the grub screw **(3)** on one side.
- Tense the coverband with a pointed pliers and fix the screws **(3)** on the opposite side.

Changing cover band ELHZ / ELVZ 100, 125

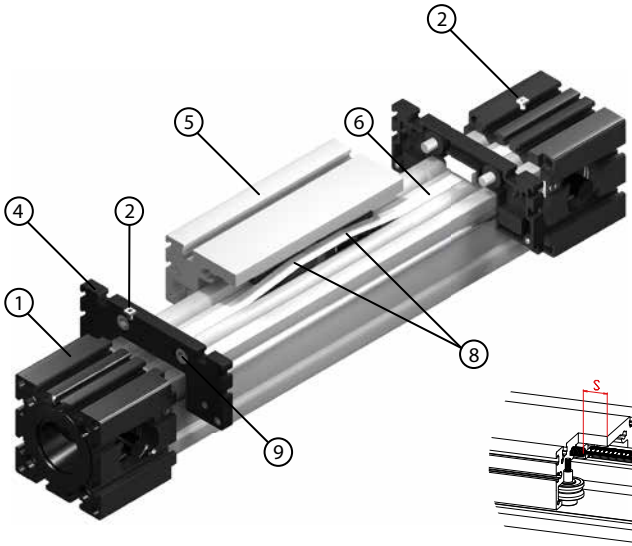

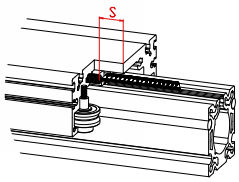

- Unscrew cylindric screws **(9)** on both sides of carriage **(5)**.
- Push the wiper end plates **(4)** to the side.
- Unscrew the grub screwes **(2)** and pull out the old coverband **(6)**.
- Push the new coverband under both sliding block **(8)** in the carriage **(5)** and wiper end plates **(4)** into the bearing block **(1)**.
- Fix the grub screw **(3)** on one side.
- Tense the coverband with a pointed pliers and fix the screws **(3)** on the opposite side.

Important:
Measure the distance "s" between the corner of carriage and the head of the grub screw for belt-tension!

Lubrication rack ELZQ

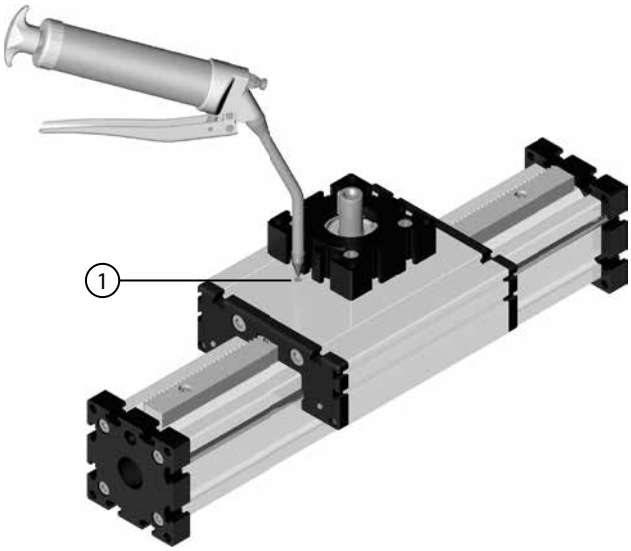

- The rack can be relubricated through a lubricating nipple **(1)** in the carriage.
- Regrease with an oil gun.

Lubrication rack ELZA / ELDZA

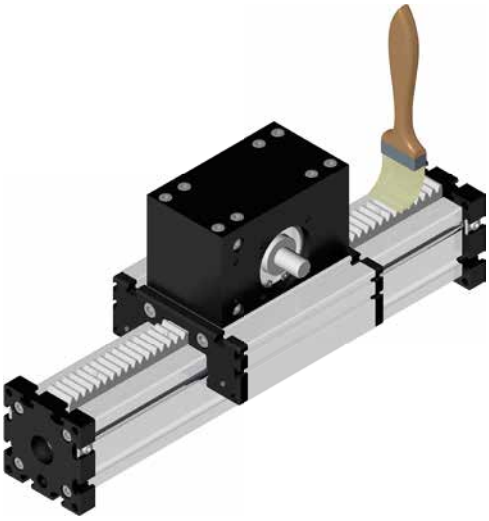

Lubrication is only necessary for steel- or stainless-steel racks and steel- or stainless-steel gears. All other material combinations are maintenance-free.

- Push the carriage close to one bearing-block.
- Grease the rack with a brush.
  Use SKF grease LGMT for this.
- After lubrication, move a few times over the entire stroke so that the lubricant can be distributed well over the entire rack.

Adjusting the rollers, sizes EL 40, 60

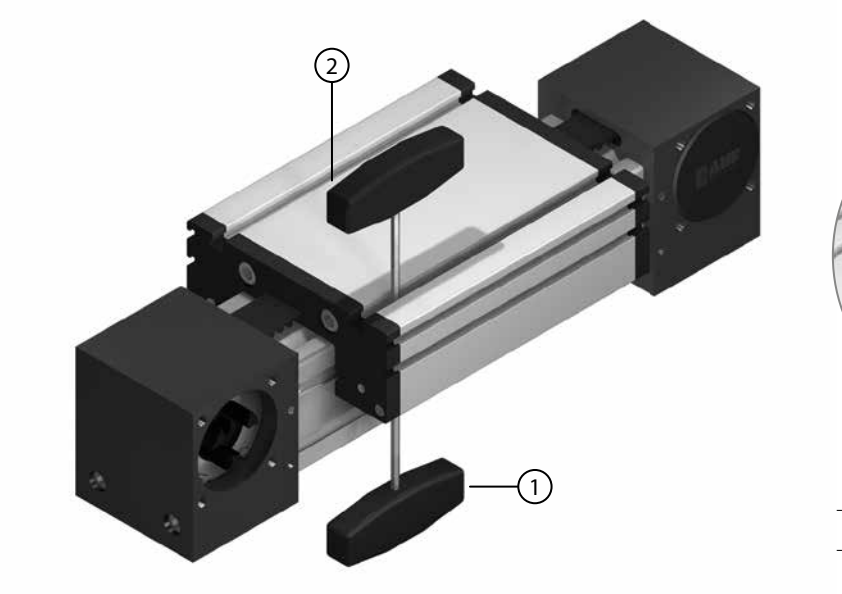

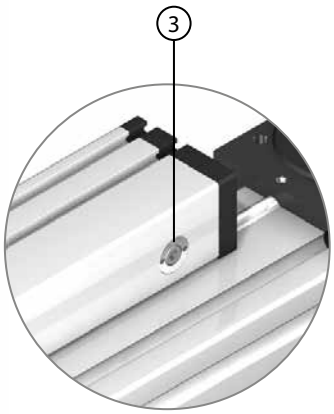

- Fasten eccentric bolt with screw key **(1)**.
- Unscrew screw with hexagon socket screw key **(2)** as far as eccentric bolt can be turned, upper surface is stamped, broken line of stamp **(3)** must coincide with drawing groove of slide.
- Adjust at other side without initial tension.
- Stamps must be in same position and eccentric bolt must be adjusted into right direction.

Adjusting the rollers, sizes EL 30, 80, 100, 125

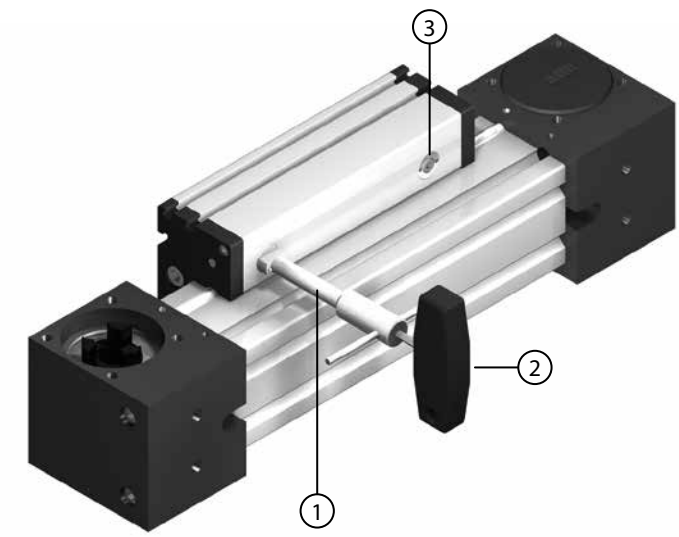

Belt tension ELZ

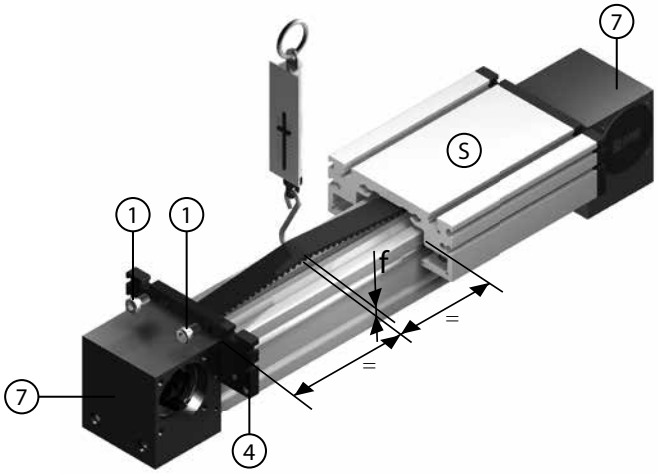

- Push the carriage **(S)** close to one bearing-block **(7)**.
- Unscrew grub screws **(2)** of the wiper endplate **(4)** and push it to the other bearing-block **(7)**.
- Pull the spring balance with force of table and measure the sag (f) of the belt. Compare the measured value with the table.
- Tense or release the belt by the grub screws **(2)**.
- Both grub screws **(2)** must have the same distance between the corner of the carriage **(5)** and the head of the grub screw **(2)**.
- The grub screws **(2)** have to be secured by bonding.
- Measure the distance (s) with a metal rule.
- Mount the wiper endplate **(4)**.

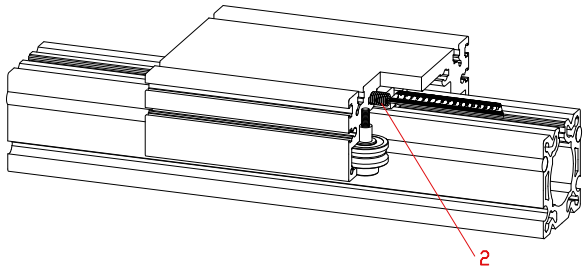

Size	Force
30	20 N
40	20 N
60	30 N
80	50 N
100	50 N
125	50 N

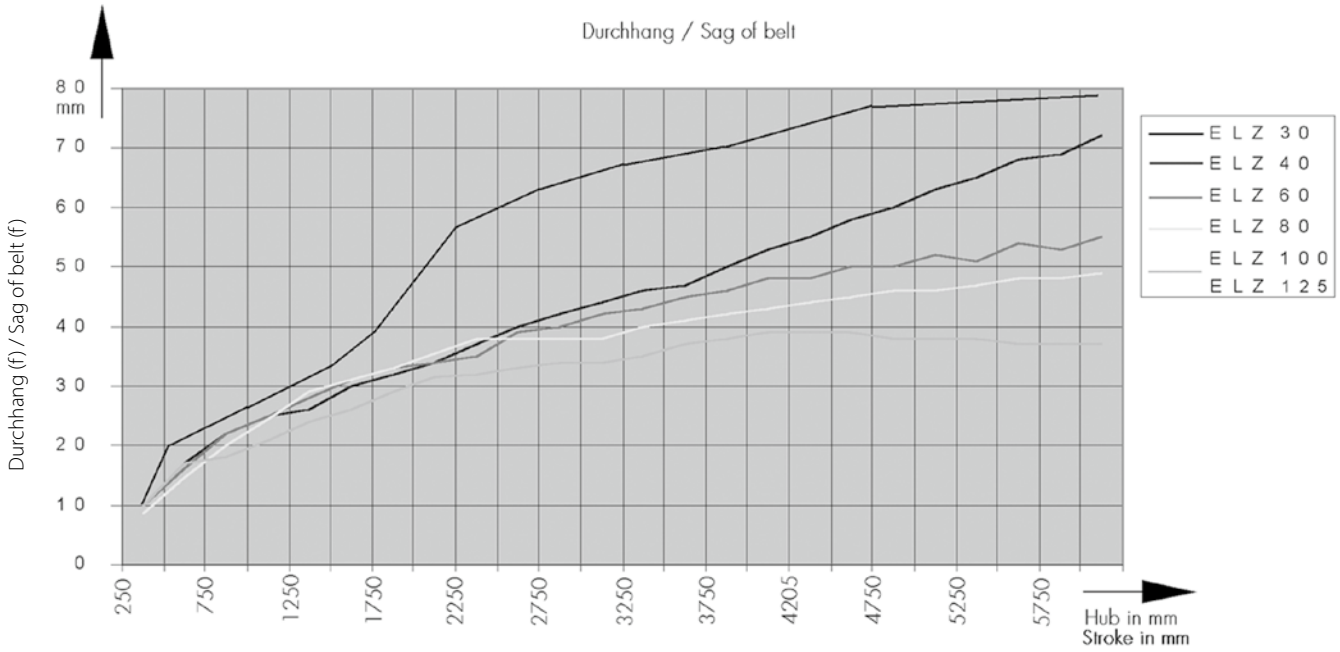

Exchange of rollers ELZ

Example: ELZU with upper and lower carriage

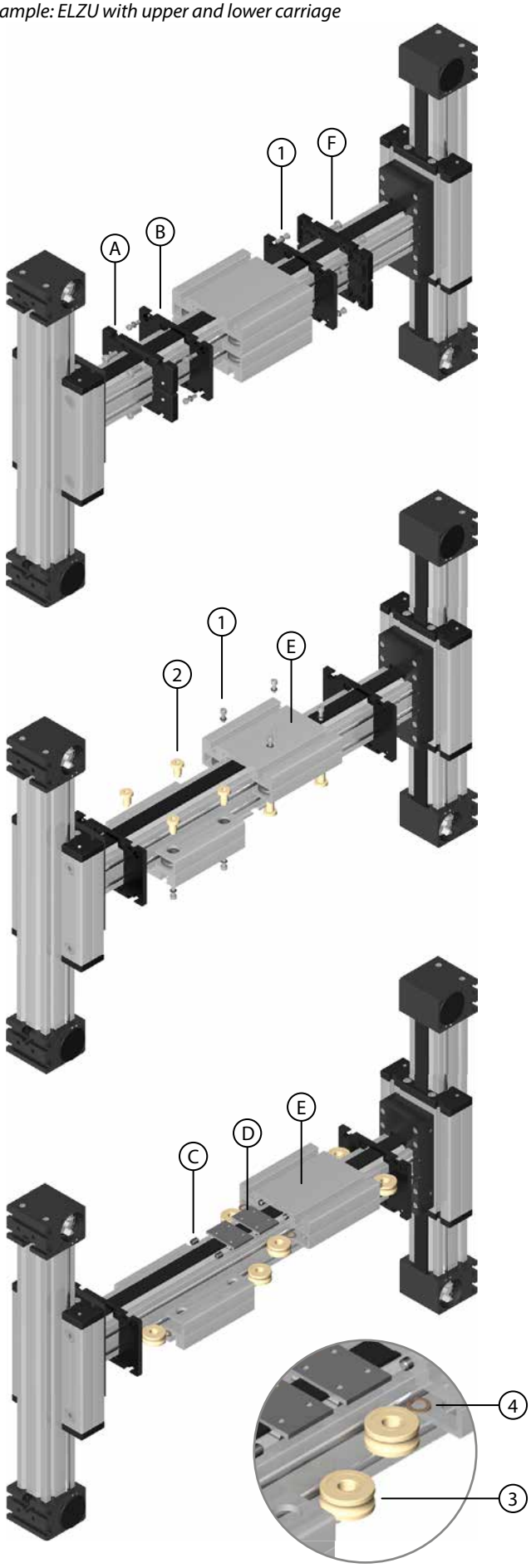

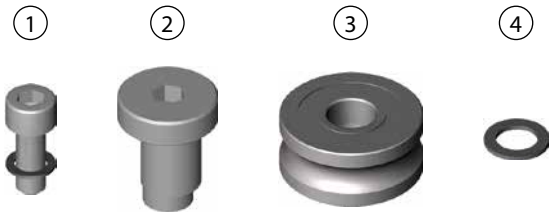

1. Clamping screw with schnorr washer
2. Eccentric bolt
3. Roller
4. Adjusting washer

- Unscrew clamping screws **(F)** and dismount the wiper end plates **(A)** and put them aside.
- Unscrew clamping screws **(1)** and push the connecting flange **(B)** to the side.
- Loosen the grub screws **(C)** from the belt tensioner **(D)**. Now the carriage can be freely moved.
- Unscrew the clamping screws **(1)** in the carriage **(E)** and remove eccentric bolt **(2)**.
- Remove rollers **(3)** and adjusting washers **(4)**.
- Insert new rollers: Put the adjusting washer **(4)** into the existing milled opening. Place the roller **(3)** onto the adjusting washer **(4)** so that it accurately fits. Re-insert eccentric bolt **(2)**. Tighten the clamping screws **(1)** carefully so that the eccentric bolt **(2)** is still freely movable.

- **Adjust the rollers!**
- After the rollers have been successfully adjusted, fix the clamping screws **(1)**.

Belt exchange ELZ

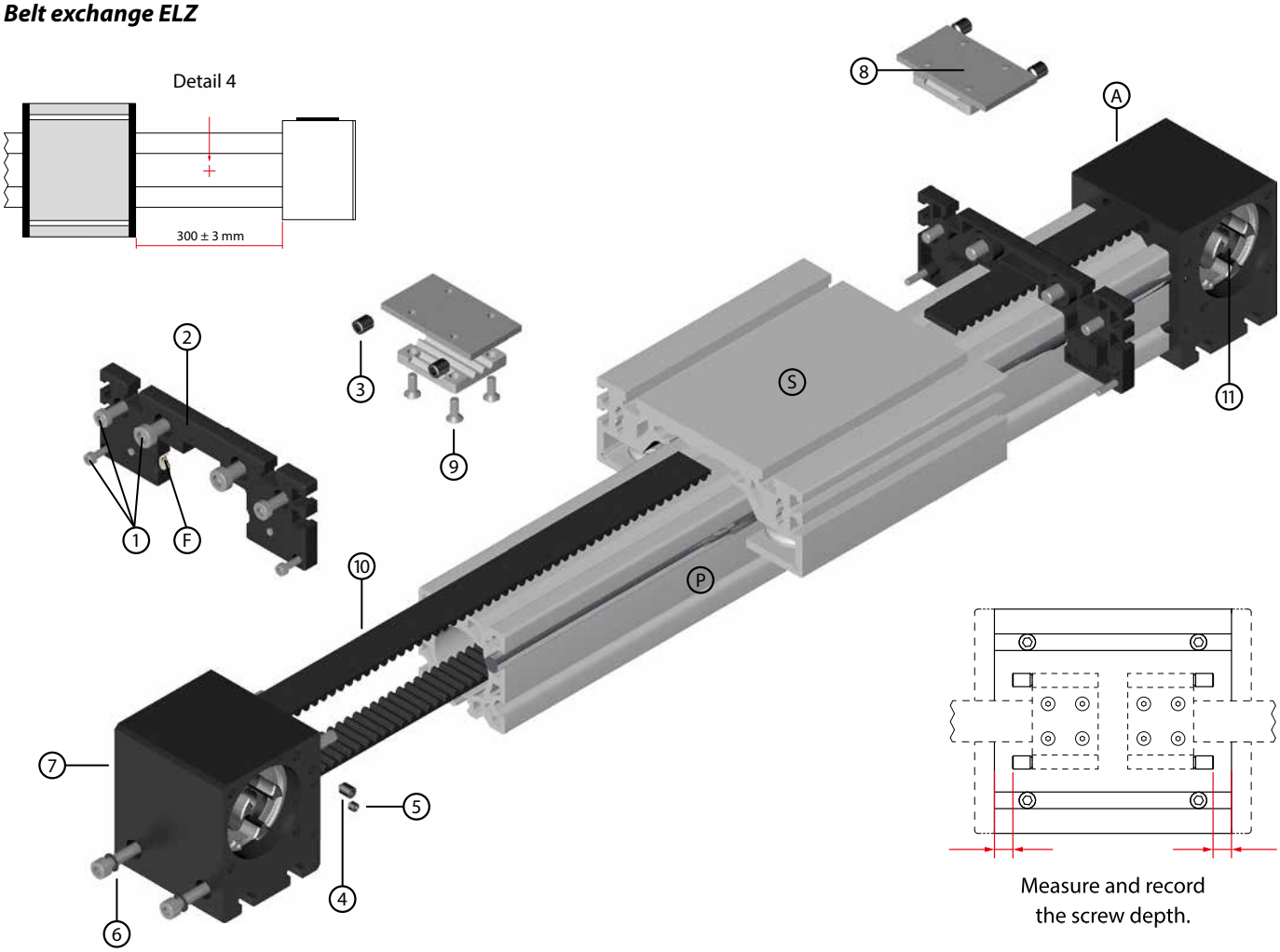

- Unscrew cylindric screws **(1)** and dismount wiper end plates **(2)** on both sides of the carriage.
  Take care, that the felt wipers (F) don`t drop out.
- The belt adjusters are fixed by grub screws **(3)** in the carriage **(S)**; to reach the right belt tension measure the distance between the edge of the carriage and the head of the grub screws. ***Notice: the distance must be the same on both sides in axial direction.***
- Unscrew the grub screws **(3)** and dismount the belt adjusters **(8).**
- Unscrew the grub screws **(4 + 5)** and the cylindric screws **(6)** and separate the bearing-block **(7)** from the unit.
- Pull out the toothed belt **(10).** In most cases it is not necessary to separate both bearing blocks for inserting the new belt.

The reconstruction of the unit takes place in opposite order.

- Shorten the new belt to the length of the old one.
- Insert the toothed belt with the toothed side to the profile **(P)** into the not dismounted pulley block **(A)**. Rotate the toothed pulley **(11)** until the toothed belt **(10)** appears at the end of the profile **(P)** and pull the belt through the dismounted pulley block **(7)**.
- Mount the pulley block **(7)** on the profile **(P)** and tighten the grub screws (4 + 5) and the cylindric screws **(6)**.
- Mount the belt adjusters **(8)** on the ends of the toothed belt and secure the countersunk screws **(9)** by bonding.
- Insert the belt adjusters into the carriage **(S)** and secure the grub screws **(3)** by bonding.
- Tension the belt as per description above and finally mount the wiper end plates **(2)** on the carriage.
  (Notice: the easiest way for mounting the wiper end plates is to secure the wipers with a rubberband while mounting.)

Check for belt tension: Set the distance between deflection unit and carriage to 300 ±3 mm (detail 4). Place the measuring device on the deflection unit or the carriage and position the sensor at 150 mm close to the toothed belt. Then use an Allen key to vibrate the belt. Adjust the belt tension to 75 ± 5 Hz.

Belt exchange ELZU

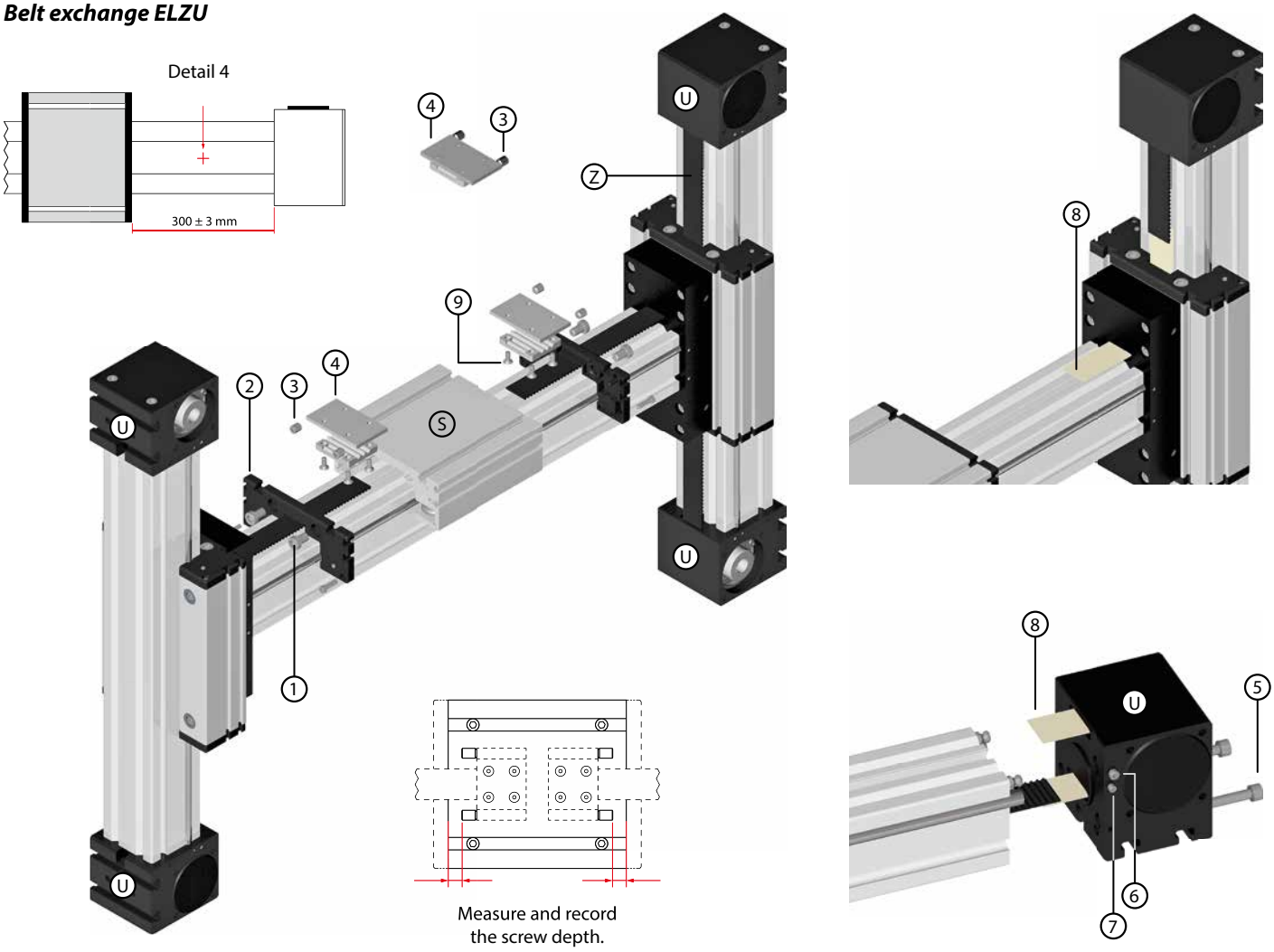

- Unscrew the cylindric screws **(1)** of the wiper end plates **(2)** and remove the wiper end plates **(2)** on both sides of the carriage.
- Record the screw-in depth of the grub screws **(3)** for tensioning the toothed belt and unscrew the grub screws **(3)** from both sides of the carriage.
- Pull the belt adjuster **(4)** with toothed belt **(Z)** out of the carriage **(S)**.
- Disassemble both toothed belt tensioners **(4)** and detach them from the toothed belt **(Z)**.
- Remove toothed belt **(Z)** from the portal.
- Loosen cylindric screws **(5 + 6)** and grub screws (for shaft clamping) **(7)**, disassemble toothed belt deflections **(U)**.

Fitting the new toothed belt

- Shorten new toothed belt **(Z)** to length of old one.
- Thread the toothed belt **(Z)** through all deflection points, using the Mylar tape **(8)** supplied to guide it.
- After the toothed belt **(Z)** has been guided through all toothed belt deflection points **(U)**, mount the toothed belt deflection points **(U)** again using the fastening screws **(5 + 6)** and grub screws (for shaft clamping) **(7)**.
- Assemble the toothed belt tensioners **(4)** at the toothed belt ends. ***Secure the countersunk screws (9) of the belt tensioners with threadlocker.***
- Insert the belt adjuster **(4)** into the carriage **(S)** and restore them with the grub screws **(3)** (the previously noted screw-in depth). ***The grub screws (3) must be secured with threadlocker.*** The belt adjuster **(4)** must sit parallel and straight in the carriage **(S)** after insertion.
- Refit the wiper end plates **(2)** to the carriage **(S)** with the cylindric screws **(1)**. (Note: The easiest way to mount the wiper end plates is to secure the felt sliders with a rubber band during mounting).

Check for belt tension: Set the distance between belt tensioner and omega deflection unit to 300 ±3 mm (detail 4). Place the measuring device on the carriage and position the sensor close to the carriage above the toothed belt. Then use an Allen key to vibrate the belt. Adjust the belt tension to 75 ± 5 Hz.

Belt exchange ELSZ

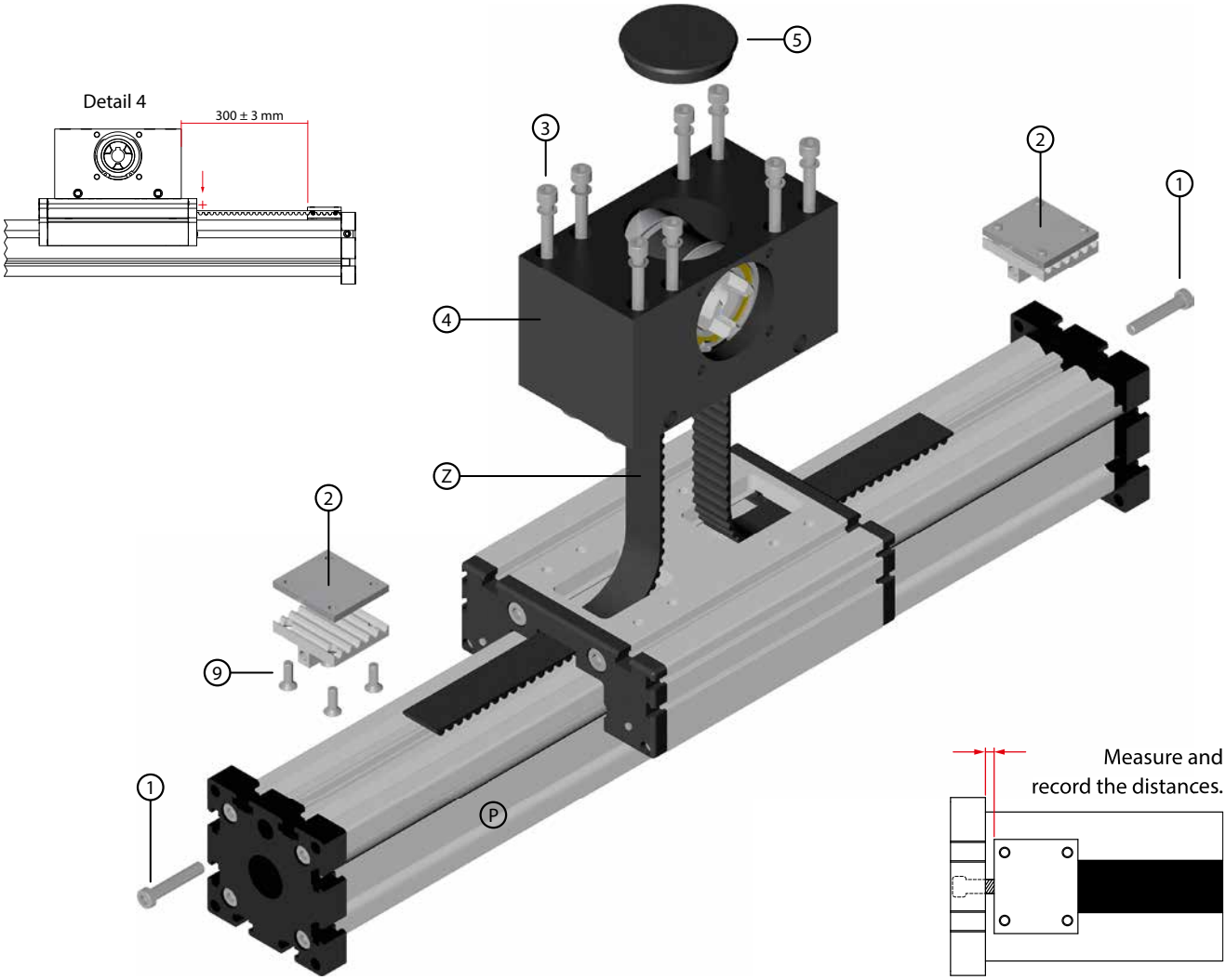

Measure and record the distances on both sides between bearing block and belt tensioner.

- Unscrew the fastening screws **(1)** of the belt tensioners **(2)** and remove the screws on both sides.
- Disassemble the two belt tensioners **(2)** and remove them from the toothed belt **(Z)**.
- Unscrew the fastening screws **(3)** of the omega deflection unit **(4)**.
- Remove the cover cap **(5)**.
- Pull the toothed belt **(Z)** out of the omega deflection unit **(4)**.

To mount the new toothed belt please follow the steps in reverse order.

- Cut the new toothed belt to the length of the old one.
- Thread the belt into the deflection unit, with the toothing towards the profile **(P)**.
- Retighten the omega deflection unit **(4)** with the fastening screws **(3)**.
- Re-assemble the belt tensioners **(2)** at the belt ends.
  The coutersunk head screws (9) of the belt tensioners must be secured with screw locking devices.
- Screw in the fastening screws **(1)** of the belt tensioners **(2)**.
  The fastening screws (1) must be secured with screw locking devices.
- Re-insert the **(5)** cover cap.

Check for belt tension: Set the distance between belt tensioner and omega deflection unit to 300 ±3 mm (detail 4). Place the measuring device on the carriage and position the sensor close to the carriage above the toothed belt. Then use an Allen key to vibrate the belt. Adjust the belt tension to 75 ± 5 Hz.

Lubrication spindle GG

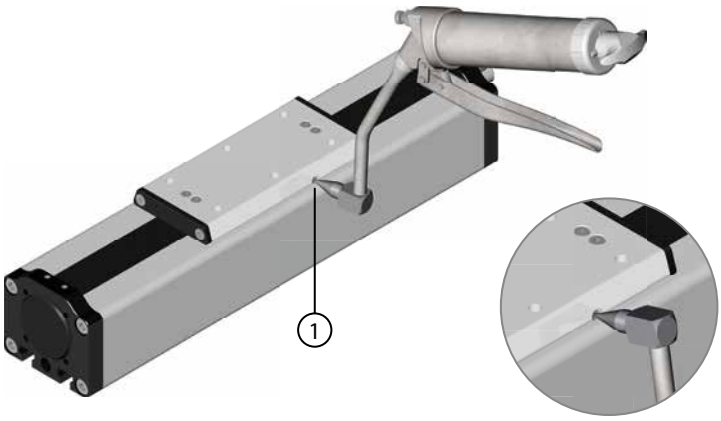

- The spindle can be relubricated through a lubricating nipple **(1)** in the carriage.
- Regrease with a grease gun.
  Grease volume 3g.
  Spindle greasing every 500 - 1000 working hours.

Lubrication spindle GDG

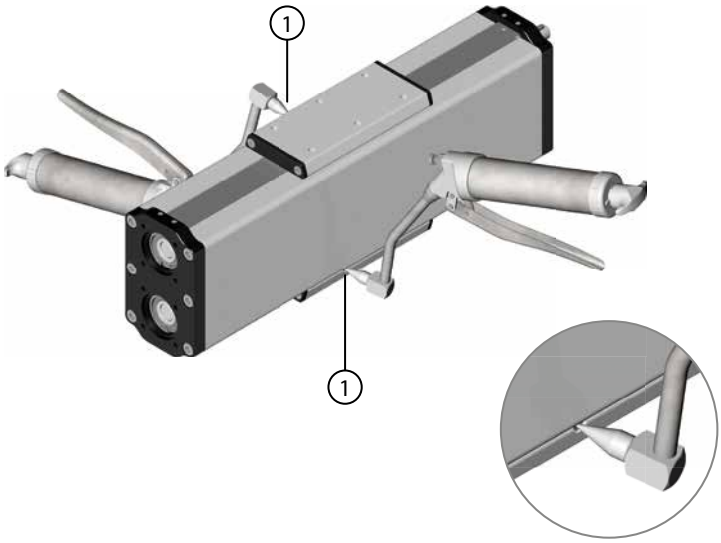

- All spindle can be relubricated through lubricating nipples **(1)** in the carriage.
- Regrease with a grease gun.
  Grease volume 3g.
  Spindle greasing every 500 - 1000 working hours.

Lubrication rack DLZA

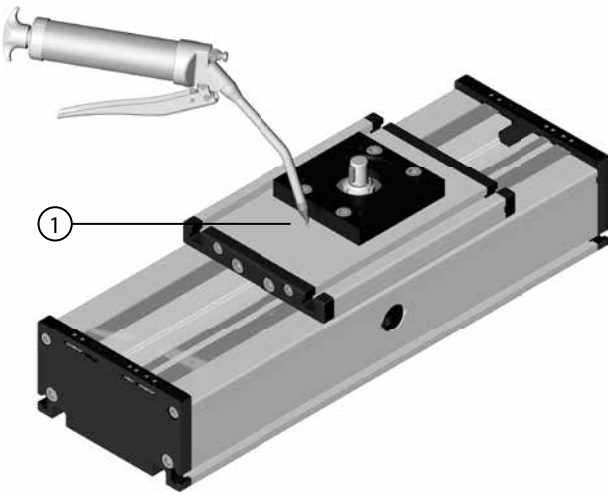

- The rack can be relubricated through a lubricating nipple **(1)** in the carriage.
- Regrease with an oil gun.

DL / DS - units

Lubrication leading-nut

DLK / DLT 120, 160, 200
DSK / DST 120, 160, 200

Applies to all positioning systems from 2017 onwards.

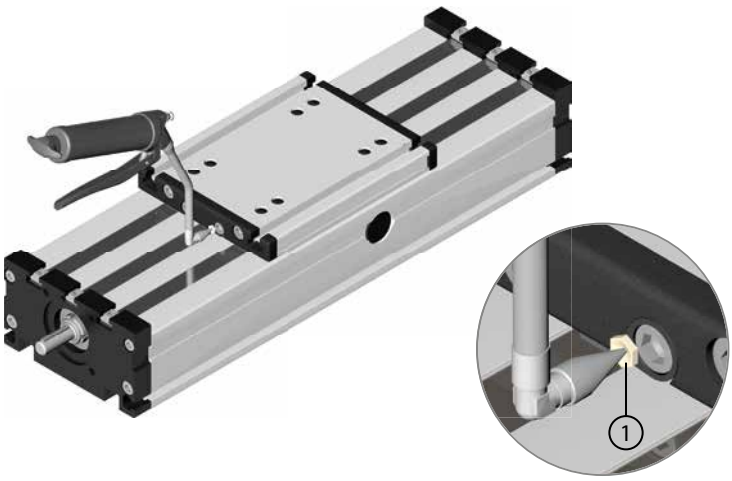

- The leading-nut can be relubricated through a lubricating nipple **(1)** in the carriage.
- Regrease with a grease gun.

For the quantity of grease see table below.
Spindle greasing every 500 - 1000 working hours.

Type	Pitch	Quantity	Type	Pitch	Quantity
120	KG 16 x 05	1,33 g	**120/160**	KG 25 x 25	3,00 g
120	KG 16 x 10	0,84 g	**200**	KG 32 x 05	3,00 g
120	KG 16 x 16	1,00 g	**200**	KG 32 x 10	4,00 g
120/160	KG 20 x 20	3,00 g	**200**	KG 32 x 20	4,00 g
120/160	KG 25 x 05	2,00 g	**200**	KG 32 x 32	4,00 g
120/160	KG 25 x 10	3,00 g			

Lubrication leading-nut

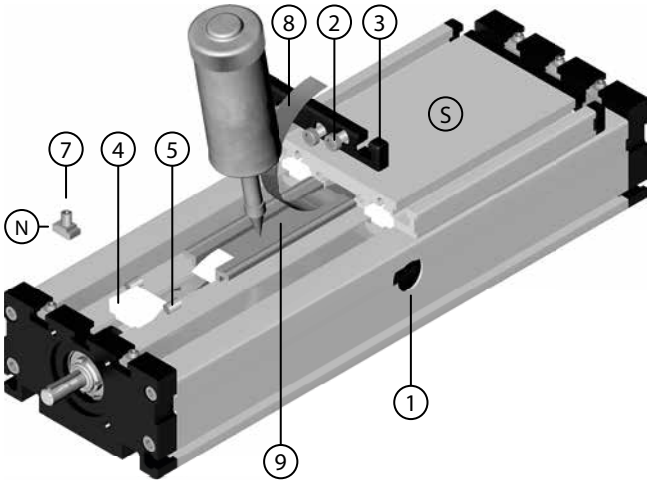

DLK / DLT 120, 200
DSK / DST 120, 200

Applies to all positioning systems up to December 2016.

- Drive the carriage **(S)** to the service position **(1)**.
- Remove the fillister head screws **(2)** and dismount cover cap **(3)**.
- Remove the middle slider **(4)** and unscrew set screws **(5)**.
- Push carriage **(S)** to the side.
- Release the set screw **(7)** and remove it using the sliding nut **(N)**.
- Pull out and lift the cover band **(8)**, now the lubrication hole is visible in the leading-nut receptacle **(9)**.
- Regrease with grease gun.

  For the quantity of grease see table below.

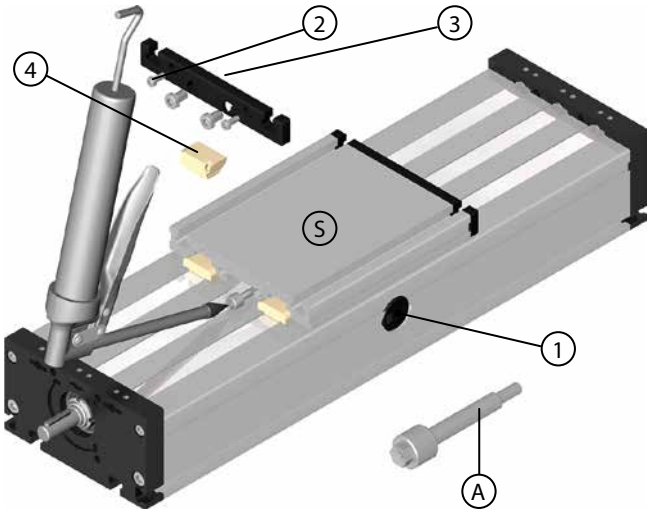

DLT / DLK 160
DST / DSK 160

Applies to all positioning systems up to December 2016.

- Drive the carriage **(S)** to the service position **(1)**.
- Remove the fillister head screws **(2)** and dismount cover cap **(3)**.
- Remove the middle slider **(4)**.
- Insert the regreasing adapter **(A)** into the lubrication hole of the leading-nut receptacle.
- Regrease now with grease gun. For the quantity of grease see table below.

  Spindle greasing every 500 - 1000 working hours.

Type	Pitch	Regreasing	Type	Pitch	Regreasing
120	KG 16 x 05	1,33 g	**120/160**	KG 25 x 25	3,00 g
120	KG 16 x 10	0,84 g	**200**	KG 32 x 05	3,00 g
120	KG 16 x 16	1,00 g	**200**	KG 32 x 10	4,00 g
120/160	KG 20 x 20	3,00 g	**200**	KG 32 x 20	4,00 g
120/160	KG 25 x 05	2,00 g	**200**	KG 32 x 32	4,00 g
120/160	KG 25 x 10	3,00 g			

Lubrication leading-nut

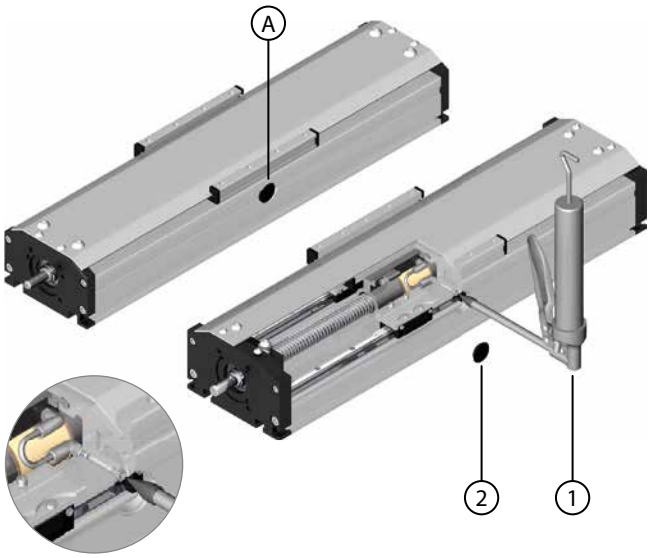

DST/K 120 P, 160 P and 200 P

- Drive the carriage to the service position (A).
- Dismount the cover cap (2). Regrease with an grease gun (1). For the quantity of grease see table below.

Spindle greasing every 500 - 1000 working hours.

Type	Pitch	Regreasing	Type	Pitch	Regreasing
120	KG 16 x 05	1,33 g	**120/160**	KG 25 x 25	3,00 g
120	KG 16 x 10	0,84 g	**200**	KG 32 x 05	3,00 g
120	KG 16 x 16	1,00 g	**200**	KG 32 x 10	4,00 g
120/160	KG 20 x 20	3,00 g	**200**	KG 32 x 20	4,00 g
120/160	KG 25 x 05	2,00 g	**200**	KG 32 x 32	4,00 g
120/160	KG 25 x 10	3,00 g			

Lubrication guiding rods

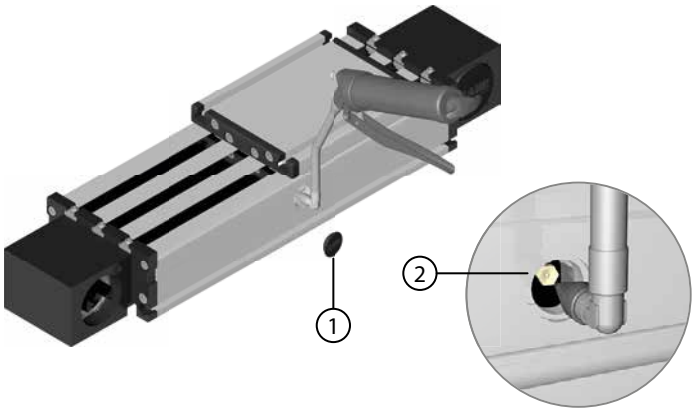

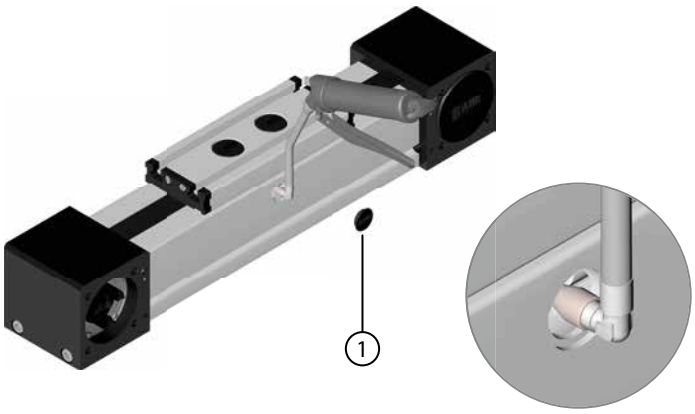

DL 120, 160, 200
QL 60, 80, 100

Lubrication is effected by an oiled felt insert. The felt can be re-oiled through lubrication nipples attached laterally to the ends of the roller packs.

- Dismount cover cap (1).
- Drive the carriage through the service position until you can see the first lubricating nipple (2) in the lubrication hole.
- Re-oiled felt now with an oil gun.
- Move the carriage to the second lubricating nipple and re-oiled here as well.

Oils with a viscosity of approx. 200 mm²/s at T=40°C are recommended. The required regreasing intervals depend on environmental conditions, the standard recommendation is once per month. To ensure a sufficient lubrication, the minimum stroke must equal the carriage length, so that sufficient greasing is achieved also in the final positions.

Lubrication runner blocks *DS 120*

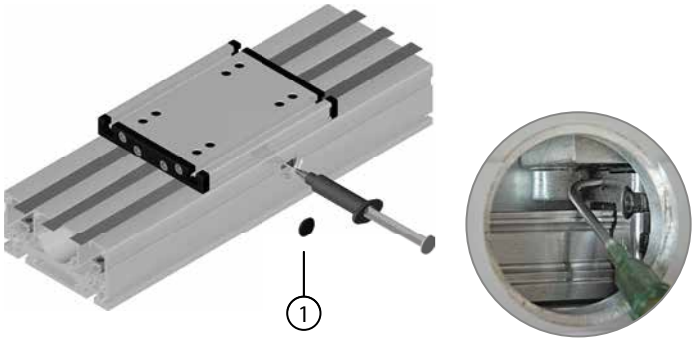

- Dismount cover cap (1).
- Drive the carriage through the service position until you can see the first runner block in the lubrication hole.
- Re-greasing with a cartridge with cannula.
- Move the carriage to the next runnerblock and re-grease here as well.

Lubrication runner blocks *DS 160, 200*
QS 60, 80, 100

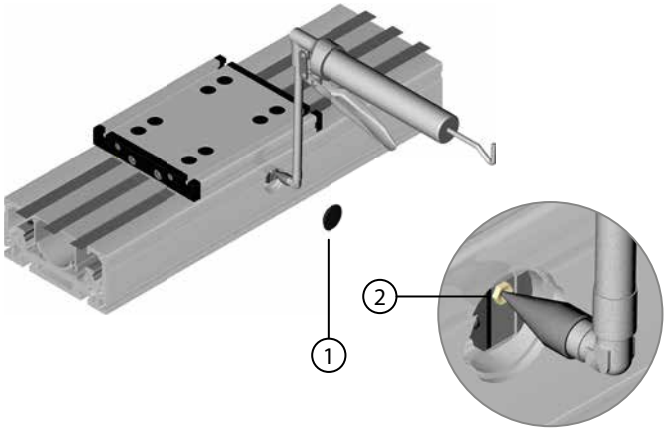

Runner blocks have to be regreased with high quality bearing grease.

- Dismount cover cap (1)
- Drive the carriage through the service position until you can see the first greasing nipple (2) in the lubrication hole.
- Re-greasing with grease gun.
- Move the carriage to the second greasing nipple and re-grease here as well.

We recommended bearing grease based on DIN 51825. The required regreasing intervals depend on environmental conditions, the standard recommendation is once per 1.000 km. *DS 120: 150 km*

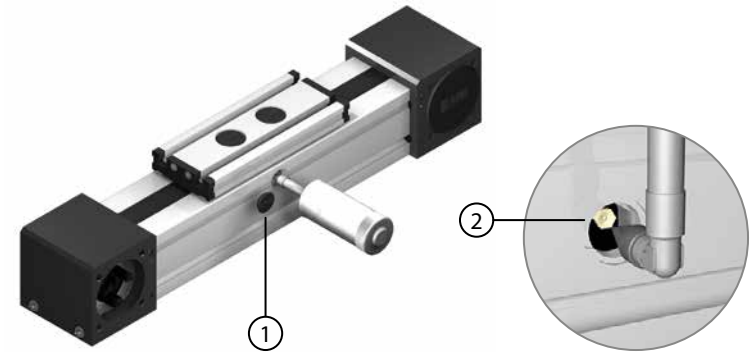

Lubrication runner blocks *QS 125*

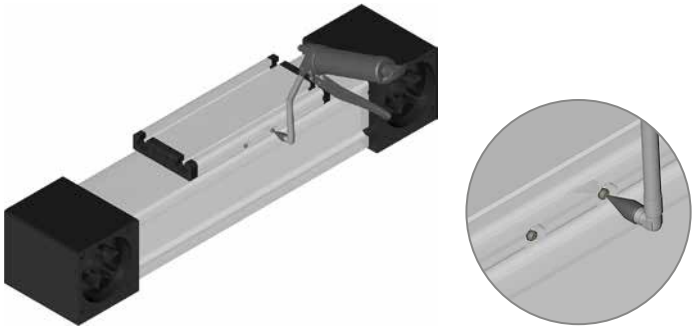

Re-greasing with a grease gun directly at the carriage side.

Relubrication			
Type	**Quantity**	**Type**	**Quantity**
DS 120	0,3ml	QS 60	0,4ml
DS 160	0,4ml	QS 80	0,5ml
DS 200	0,8ml	QS 100	0,8ml
		QS 125	1,2ml

Q - units

Lubrication leading-nut ***QST / QSK 60, 80, 100***

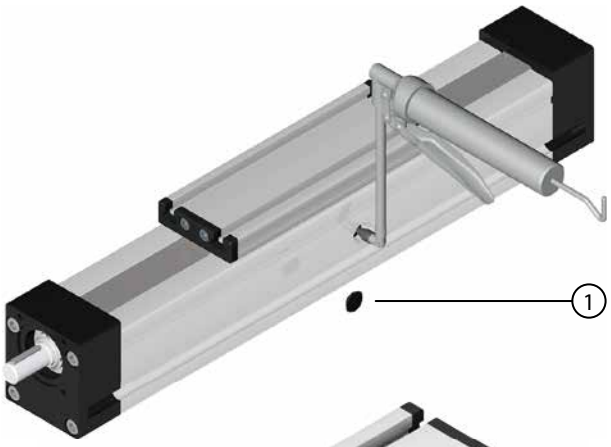

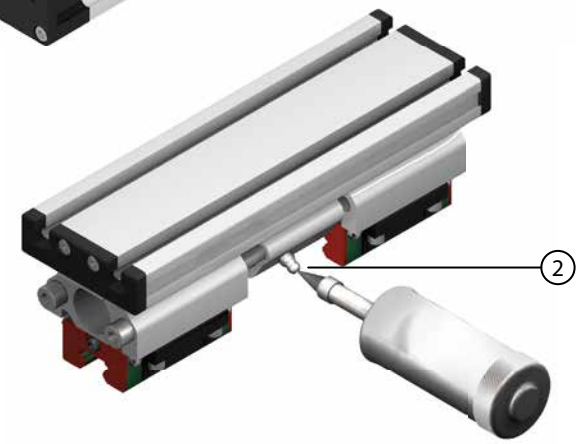

Leading-nuts have to be regreased with high quality bearing grease.

- Dismount cover cap **(1)**.
- Drive the carriage through the service position until you can see the first greasing nipple **(2)** in the grease hole.
- Regrease felt now with an grease gun.
- Move the carriage to the second greasing nipple and re-grease here as well.

We recommended bearing grease based on DIN 51825. The required regreasing intervals depend on environmental conditions, the standard recommendation is once per 1.000 km.

Type	Pitch	Regreasing	Type	Pitch	Regreasing
60	KG 16 x 05	1,33 g	**100**	KG 32 x 05	3,00 g
60	KG 16 x 10	0,84 g	**100**	KG 32 x 10	4,00 g
60	KG 16 x 16	1,00 g	**100**	KG 32 x 32	4,00 g
80	KG 20 x 20	3,00 g			
80	KG 25 x 05	2,00 g			
80	KG 25 x 10	3,00 g			

Belt tension adjustment
DLZ / DSZ 120, 160, 200

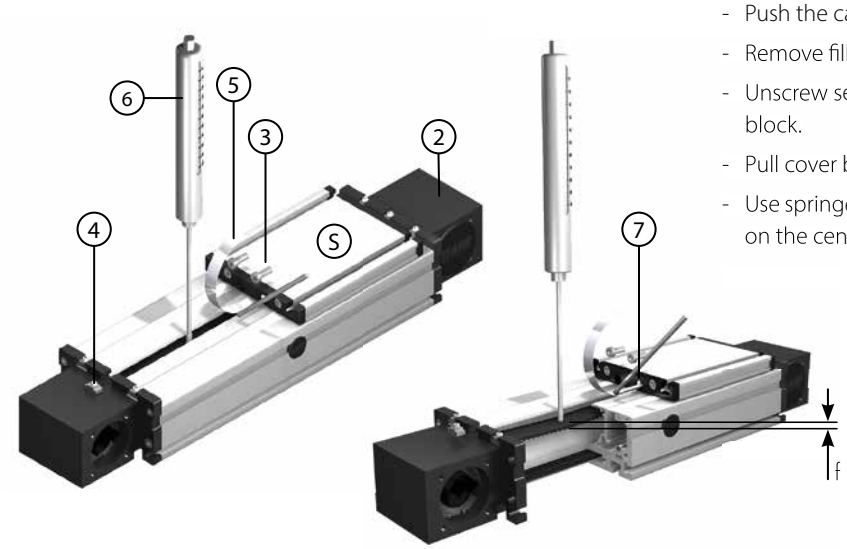

- Push the carriage (S) close to one bearing block (2).
- Remove fillister head screws (3).
- Unscrew set screws (4) for middle cover band (5) at the opposite bearing block.
- Pull cover band out of bearing block and turn it to the side.
- Use springe balance (6) to exert the applicable amount of force (see table) on the center of the belt and measure the sag (f).
  - Compare the measured value with the diagram below, and tense of release belt as required by tightening or unscrewing the set screws (7).
  - The set screws (7) must be bonded in place with screw locking device.
  - Both screws (7) must be screwed in to exactly the same level. Check with sliding caliper.

Size	Stroke (mm)	Force (N)
120	< 2500 2500 - 6000	20 10
160	< 2500 2500 - 6000	20 10
200	< 2500 2500 - 6000	40 20

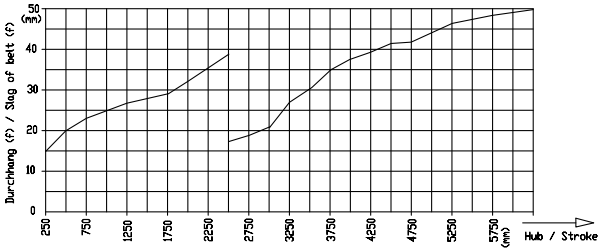

Changing cover band

D 120

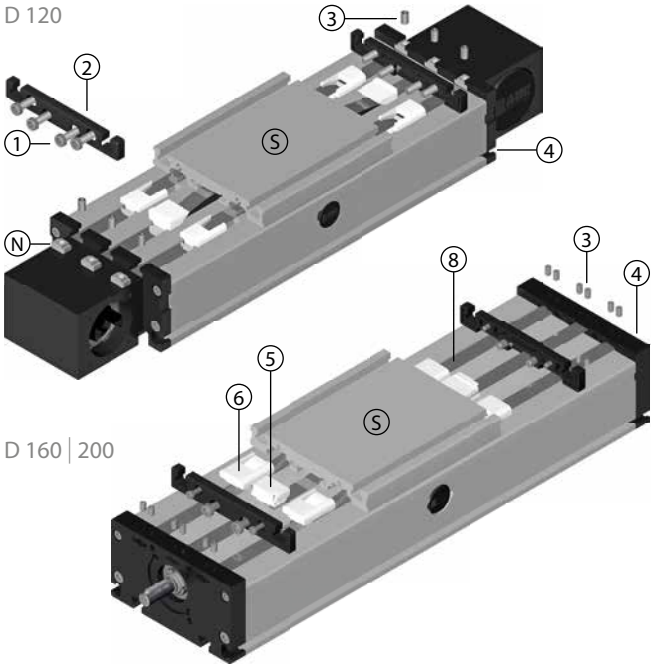

D 160 | 200

DLZ / DSZ 120, 160, 200
DLT / DLK / DST / DSK 120, 160, 200

- Drive the carriage (S) to servicing position.
- Remove fillister head screws (1) and wiper end plate (2).
- **Size 160 and 200:** Unscrew set screws (3) at both bearing-block plates (4) and pull the cover band out of the bearing block.
- **Size 120:** Unscrew set screws (3) and remove them with T-nut (N).
- Remove the sliders (5) and (6) from both sides of the carriage (S).
- Pull the cover bands (8) out of the carriage (S).
- Insert the new cover bands into the carriage (S).
- Thread the lateral sliders (6) onto the cover band and insert it into the carriage with middle slider (5).
- **Size 160 and 200:** Tighten cover bands on one side of the bearing block with set screws (3), tense cover band (8) at the other bearing block using pliers and tighten with set screws (3).
- **Size 120:** Insert T-nut together with set screw into the bearing block plates (4) and tighten cover band (8) with set screw (3).

Adjusting the rollers
DL 120, 160, 200

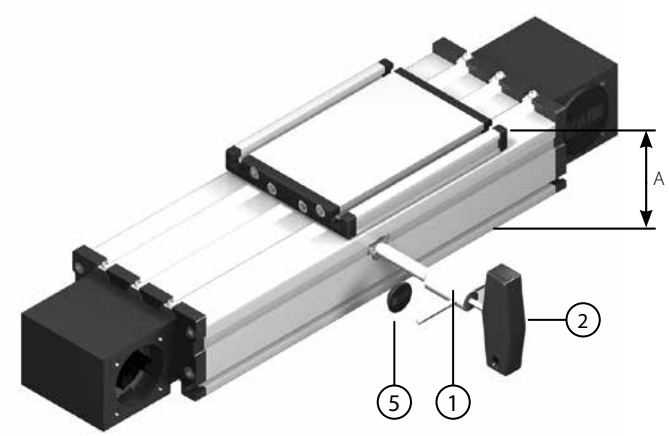

- Dismount cover cap **(5)** from servicing hole.
- Fasten eccentric bolt with screw key **(1)**.
- Release screws with hexagon socket screw key **(2)** until the eccentric bolt can be turned.
- Adjust the gap dimension **(A)** between top of the carriage and body ground of guiding profile by turning the eccentric bolts **(3)**. Turning towards + will increase the dimension A.
  DL 120: A=79 mm; **DL 160:** A=106 mm; **DL 200:** A=129 mm
- Turn the eccentric bolts **(4)** to adjust the carriage free of play by the touch (without initial tension).
- Ensure that the eccentric bolts are adjusted to the right.

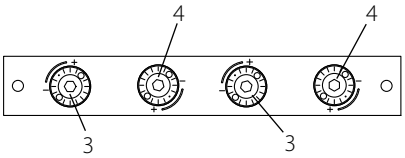

Adjusting the rollers
QL 60, 80, 100

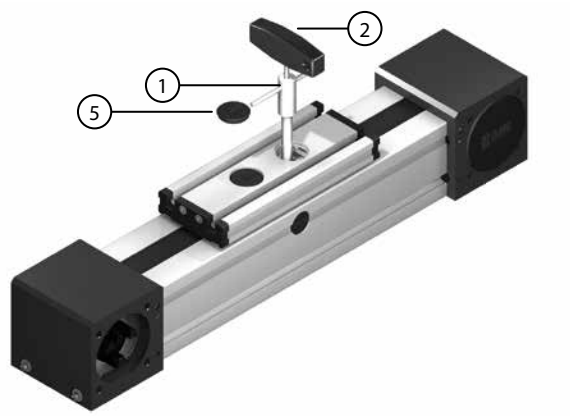

- Dismount cover cap **(5)** from servicing hole.
- Fasten eccentric bolt with screw key **(1)**.
- Release screws with hexagon socket screw key **(2)** until the eccentric bolt can be turned.
- Turn the eccentric bolts to adjust the carriage free of play (without initial tension).
- Ensure that the eccentric bolts are adjusted to the right.

Belt exchange DL / DS 120, 160, 200

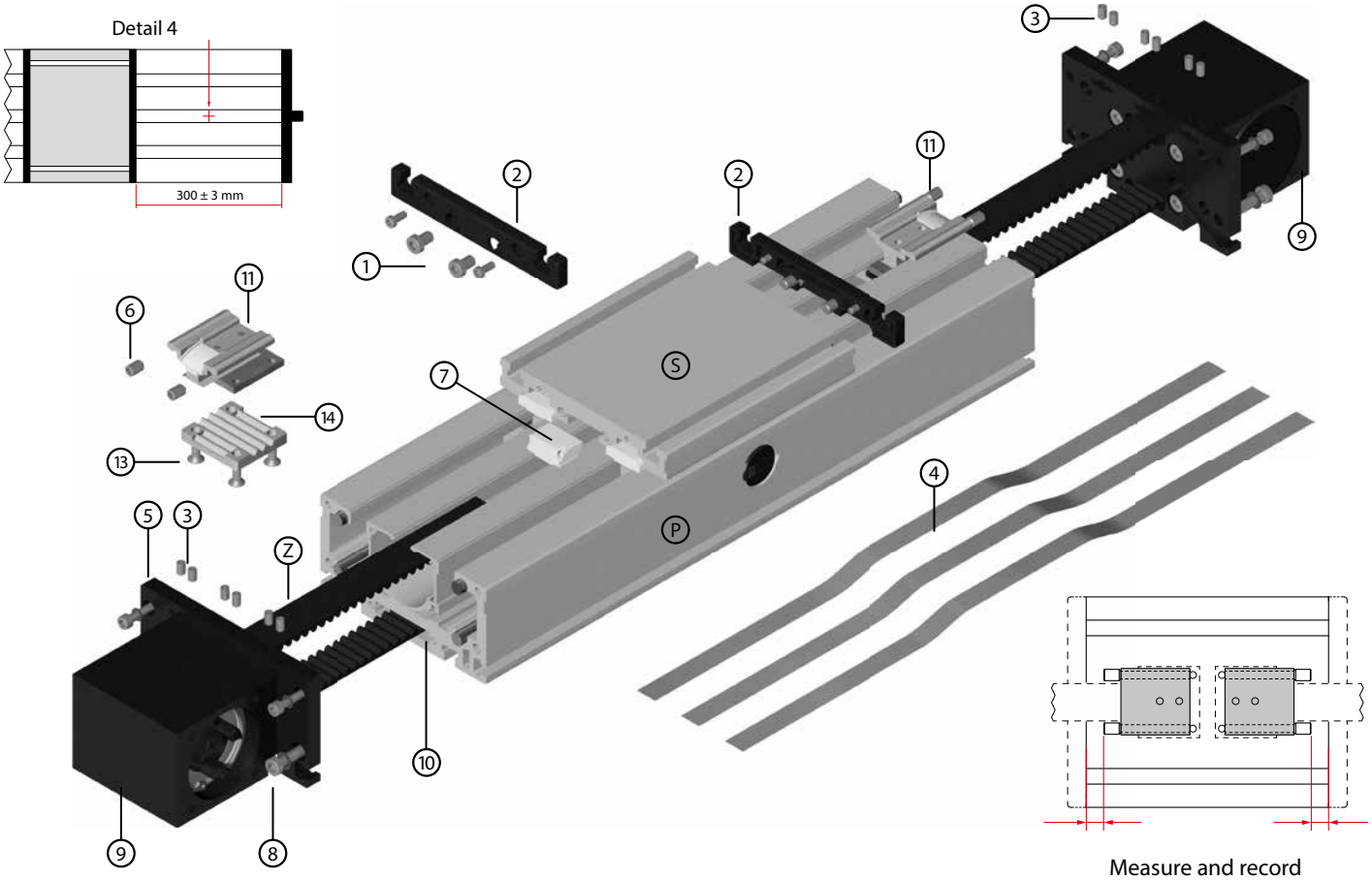

Measure and record the screw depth.

- Unscrew cylindric screws **(1)** and dismount the wiper end plates **(2)** on both sides of the carriage.
- Unscrew grub screws (3) on both sides of the unit and pull out only the middle cover band **(4)** of the bearing-block plate **(5)**.
- Pull only the middle sliding block **(7)** out of the carriage.
- The belt adjusters are fixed by grub screws **(6)** in the carriage **(S)**; to reach the right belt tension, measure the distance between the edge of the carriage **(S)** and the head of the grub screws **(6)**.
- Unscrew grub crews **(6)** on both sides of the carriage **(S)**.
- Unscrew cylindric screws **(8)** at the bearing-block plates **(5)** and dismount them completely with the bearing-blocks **(9)** at both ends of the unit.
- Pull out the belt-adjusters **(11)** completely with the belt out of the carriage **(S)** and the guiding-profile **(P)**.
- Unscrew the countersunk head screws **(13)** and dismount the belt-adjuster **(11,14)**.

Reconstruction of the unit in opposed order.

- Shorten the new belt to the length of the old one.
- Push the belt with teeth side up to the carriage **(S)** into the slot of the guiding-profile **(10)** and push it with the ends through each bearing-block **(9)**.
- Mount the belt-adjusters **(11,14)** by the countersunk head screws **(13)**. *Secure the countersunk head screws (13) by bonding.*
- Push them again together with the belt **(Z)** into the guiding-profile **(P)** and then into the carriage **(S)**.
- Mount the bearing-block plates **(5)** again together with the bearing-blocks **(9)** at the ends of the unit.
- Screw the grub screws **(6)** into the carriage **(S)** as far as the recorded screwing depth. ***Secure the grub screws (6) by bonding.***
- Pull the middle cover-band **(4)** through the carriage **(S)**.
- Pull in the middle sliding block **(7)** into the slot of the carriage **(S)**.
- Mount the grub screws **(3)** on one side of the unit and tension the 3 cover-bands from the other side and fix them too by the grub-screws **(3)**.
- Finally mount the wiper end plates **(2)** on the carriage.

Check for belt tension: Set the distance between deflection unit and carriage to 300 ±3 mm (detail 4). Place the measuring device on the deflection unit or the carriage and position the sensor at 150 mm close to the toothed belt. Then use an Allen key to vibrate the belt. Adjust the belt tension to 75 ± 5 Hz.

Belt exchange QL / QS

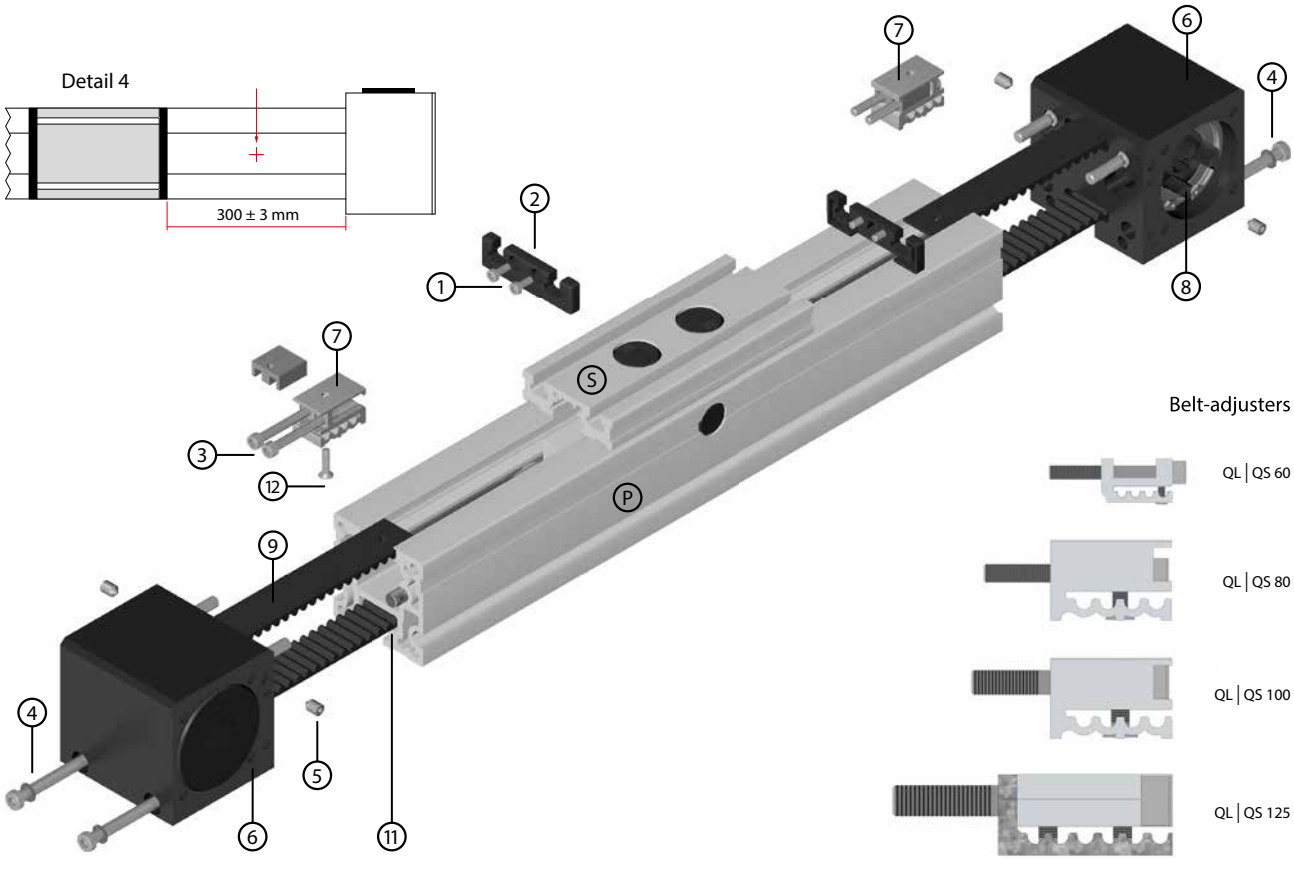

- Unscrew cylindric screws **(1)** and dismount the wiper end plates **(2)** on both sides of the carriage.
- Unscrew cylindric screws **(3)** on both sides of the carriage **(S)**.
- Unscrew cylindric screws **(4)** and the grub screws **(5)** at the bearing-block **(6)** and dismount them completely at both ends of the unit.
- Pull out the belt-adjusters **(7)** completely with the belt out of the carriage **(S)** and the guiding-profile **(P)**.
- Dismount the belt-adjusters. Unscrew the countersunk screws **(12)** from the belt-adjusters. Press the belt sideways out of both belt-adjusters **(7)**.
- Pull the belt **(9)** completely out of the bearing-blocks **(6)**.

Reconstruction of the unit in opposed order.

- Shorten the new belt to the length of the old one. The pre-existing holes must be drilled into the new toothed belt in the flank diameter of the screw **(12)**.
- Push the belt with teeth side up to the carriage **(S)** into the slot of the guiding-profile **(11)** and push it with the ends through each bearing-block **(6)**. **Tip:** rotate the toothed pulley **(8)** until the toothed belt appears through the bearing-block **(6)**.
- Press the belt again into the belt-adjusters **(7)**. *Secure the countersunk screws (12) by bonding.*
- Push them again together with the belt into the guiding-profile **(P)** and then into the carriage **(S)**.
- Mount the bearing-blocks **(6)** again.
- Mount both belt-adjusters **(7)** into the carriage **(S)**. *Secure the cylindric screws (3) by bonding.* You have to tension the belt with dosed force and test the soft running of the pulleys by turning them.
- Mount the the wiper end plates **(2)** again.

Check for belt tension: Set the distance between deflection unit and carriage to 300 ±3 mm (detail 4). Place the measuring device on the deflection unit or the carriage and position the sensor at 150 mm close to the toothed belt. Then use an Allen key to vibrate the belt. Adjust the belt tension to 75 ± 5 Hz.

Lubrication LLZ / LLZE

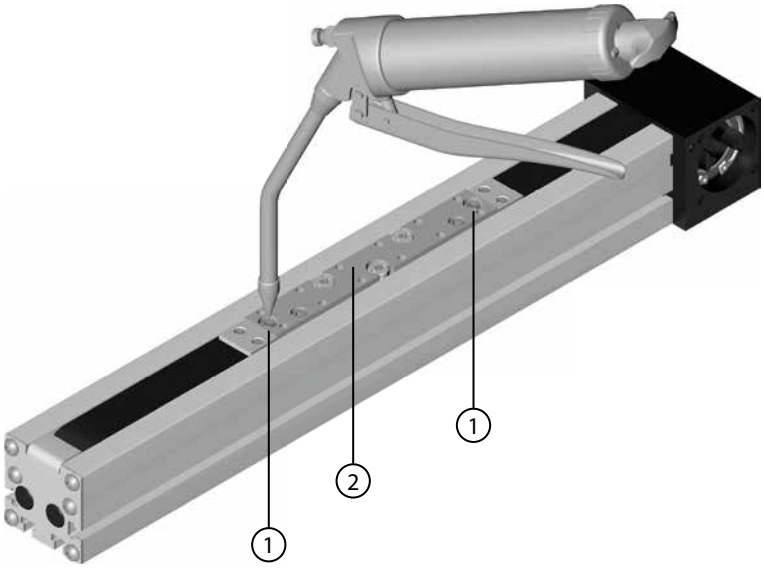

Rods will be greased by the strippers of carriage.

There are 2 oil nipples **(1)** in the carriage **(2)**, where the tanks for the strippers can be filled with an oil gun.

Viscosity of oil: 200 mm²/s, T= 40° C. Interval of greasing depends on environmental conditions, min. once a month. Minimum stroke must be same than length of slide.

Adjusting the rollers LLZ / LLZE

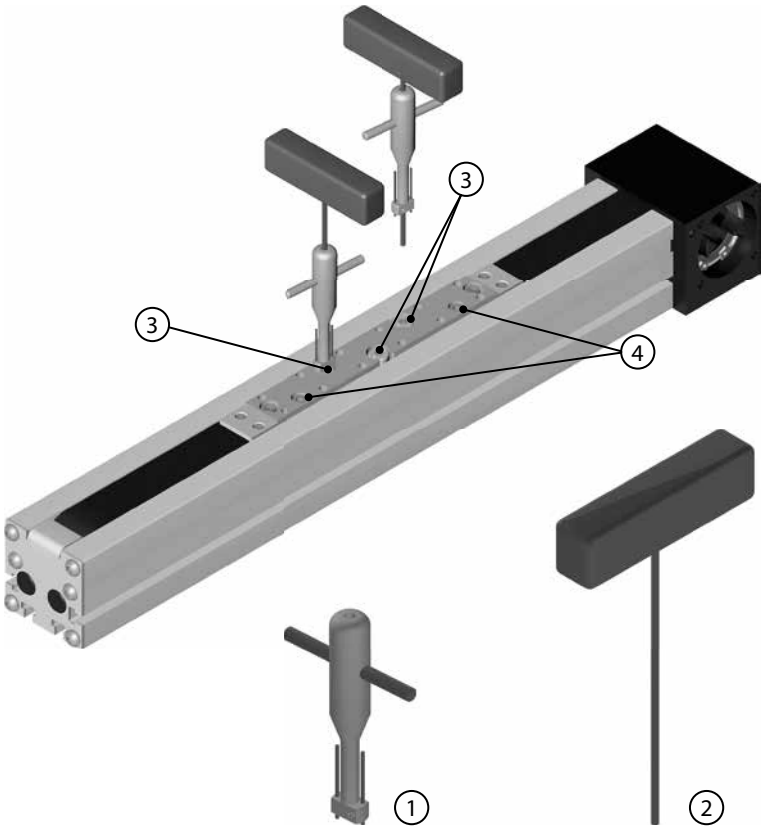

1. Eccentric key for tightening the 2-hole counternut.
2. Hexagon socket for adjusting the eccentric.
3. Adjustable rollers
4. Non adjustable rollers

- Loose the 2-hole counter nut with the eccentric key **(1)**.
- Try to turn the eccentric with the hexagon socket **(2)**. The eccentric must be movable.
- Turn the eccentric with the hexagon socket closly and delicately to the right, until the eccentric is playless.
- Now fix the eccentric with the hexagon socket **(2)** and tighten the 2-hole nut by a turn to the right.

Lubrication LSZ / LSZE

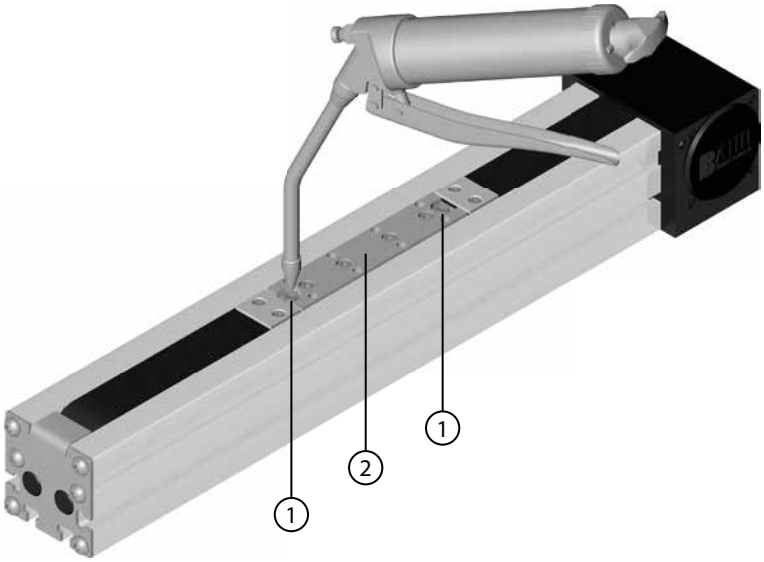

In the carriage **(2)** are two greasing nipples **(1)** , where the runner blocks can be filled with an grease gun.

We recommended bearing grease based on DIN 51825. The required regreasing intervals depend on environmental conditions, the standard recommendation is once per 1.000 km.*

Relubrication	
Type	**Quantity**
LS 60	0,4 ml
LS 80	0,5 ml

Adjusting the rollers UL

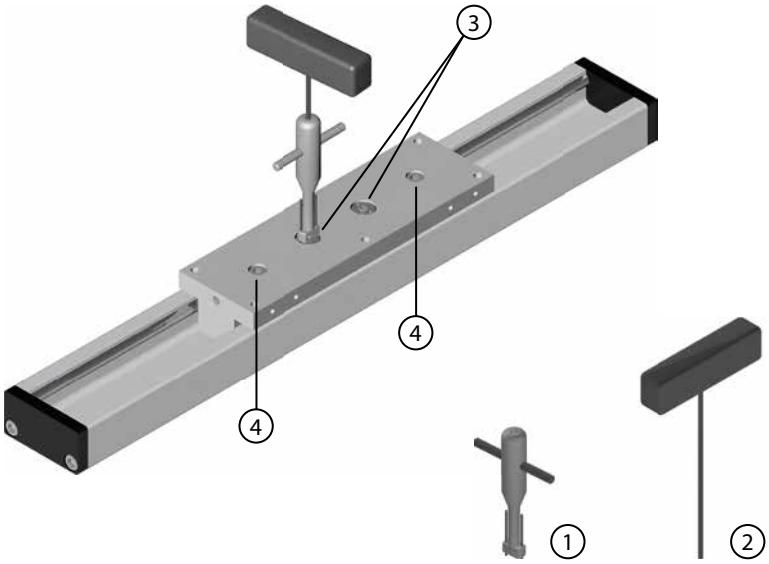

1. Eccentric key for tightening the 2-hole counternut.
2. Hexagon socket for adjusting the eccentric.
3. Adjustable rollers
4. Non adjustable rollers

- Loose the 2-hole counter nut with the eccentric key **(1)**.
- Try to turn the eccentric with the hexagon socket **(2)**. The eccentric must be movable.
- Turn the eccentric with the hexagon socket closly and delicately to the right, until the eccentric is playless.
- Now fix the eccentric with the hexagon socket **(2)** and tighten the 2-hole nut by a turn to the right.

Lubrication UL

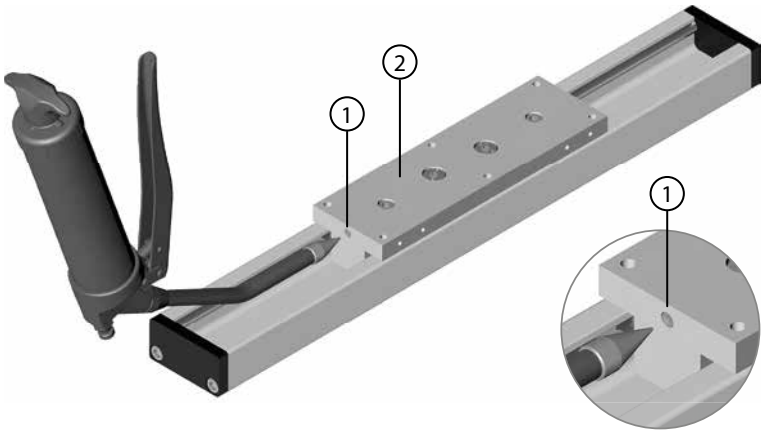

Rods will be greased by the strippers of carriage.

There are 2 oil nipples **(1)** in the carriage **(2)**, where the tanks for the strippers can be filled with an oil gun.

Viscosity of oil: 200 mm²/s, T= 40° C. Interval of greasing depends on environmental conditions, min. once a month. Minimum stroke must be same than length of slide.

LL / LS - units

Belt exchange LL / LS

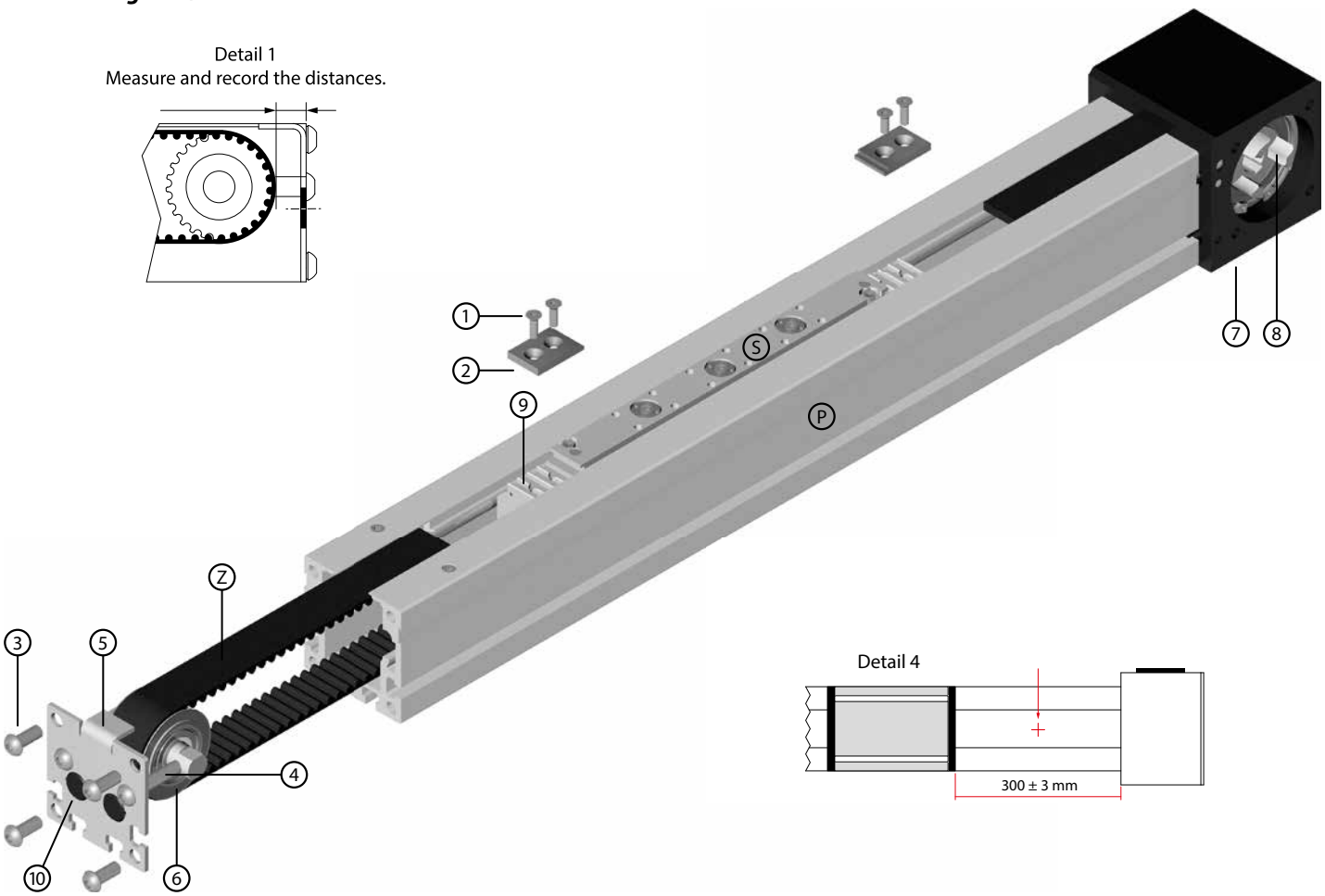

Remove the cover caps (10). Measure and record the distance between bearing block and belt (Detail 1).

- Unscrew the fastening screws (2 pcs.) **(4)** and remove the bearing block **(5)**.
- Unscrew the countersunk screws **(1)** and remove the fixing plates for the belt **(2)**.
- Unscrew the fastening screws (4 pcs.) **(3)**.
- Pull the toothed pulley **(6)** with timing belt **(Z)** out of the guide profile **(P)**.

To mount the new toothed belt please follow the steps in reverse order.

- Cut the new toothed belt to the length of the old one. The pre-existing holes must be drilled into the new toothed belt in the flank diameter of the screw **(1)**.
- Push the belt with teeth side up to the carriage **(S)** into the guiding-profile **(P)** and push it with the ends through each bearing-block **(7)**. (Tip: rotate the toothed pulley **(8)** until the toothed belt appears through the bearing-block **(7)**.
- Reposition the toothed pulley **(8)**.
- Press the belt again into the belt-adjusters **(9)**, remove the fixing plates **(2)** and screw in with the countersunk screws **(1)**. *Secure the countersunk screws (1) by bonding.*
- Screw the fastening screws **(3)** of the bearing plate back in place.
- Screw fastening screws **(4)** back in place to tension the toothed belt. Pay attention to the recorded screw-in depth (Detail 3). *Secure the countersunk screws (4) by bonding.*
- The timing belt can be adjusted with the aid of the fastening screws **(4)**. *Attention, you have to push the carriage by hand.*
- Re-insert the **(10)** the cover caps.

Check for belt tension: Set the distance between deflection unit and carriage to 300 ±3 mm (detail 4). Place the measuring device on the deflection unit or the carriage and position the sensor at 150 mm close to the toothed belt. Then use an Allen key to vibrate the belt. Adjust the belt tension to 75 ± 5 Hz.

Detail 3

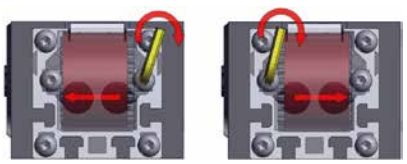

ALLZ 203, 204 belt tension adjustment

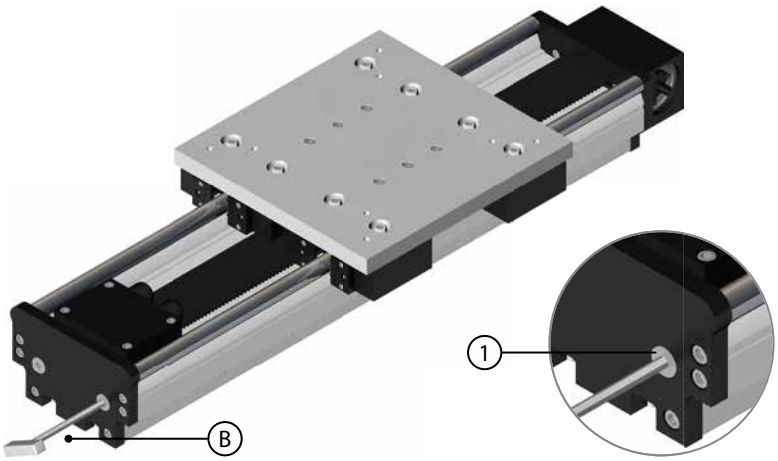

(B) Hexagon socket wrench SW 10
for belt adjustment screw (1)

Adjust the belt adjustment screws (1) evenly and in accordance with the respective application.

ALLZ 203, 204 roller adjustment

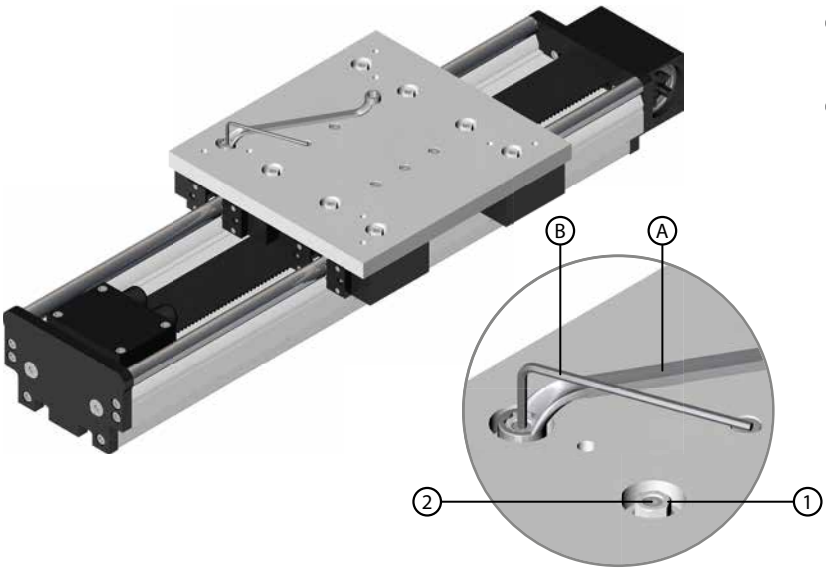

(A) Ring wrench (cranked)
for tightening and fixing the hexagon nut.

(B) Hexagon socket wrench
for adjusting the eccentrics.

- Loosen the hexagon screw (1), so that the eccentric can be rotated.
- Adjust the carriage without backlash by rotating the eccentrics (2) in small increments.
- After the eccentrics have been adjusted, fix the eccentric using the hexagon socket wrench (B) and tighten the hexagon socket (1) using the cranked ring wrench (A).

ALL roller lubrication

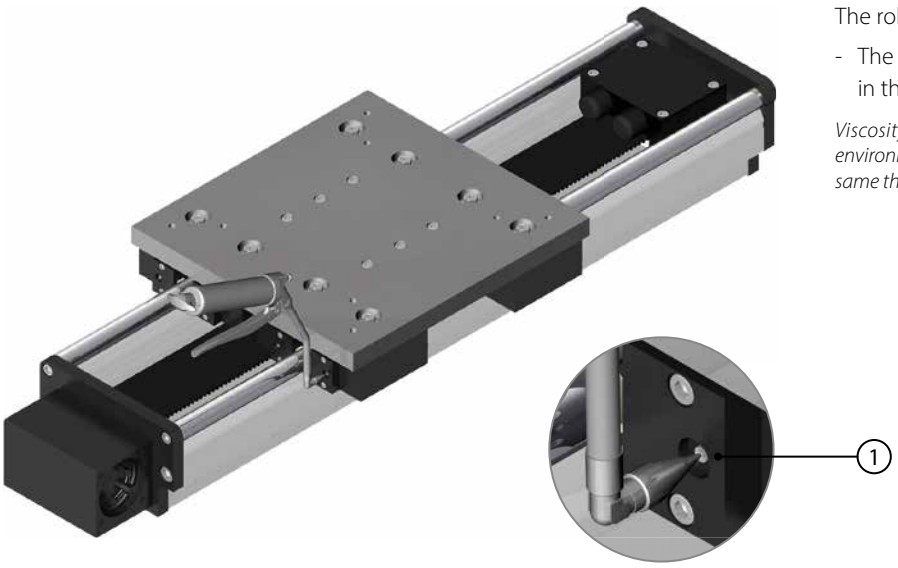

The rollers are lubricated by means of an oiled felt insert.

- The felt can be relubricated through lubricating nipples (1) in the carriage.

Viscosity of oil: 200 mm²/s, T= 40° C. Interval of greasing depends on environmental conditions, min. once a month. Minimum stroke must be same than length of slide.

Lubrication rack ALLZQ

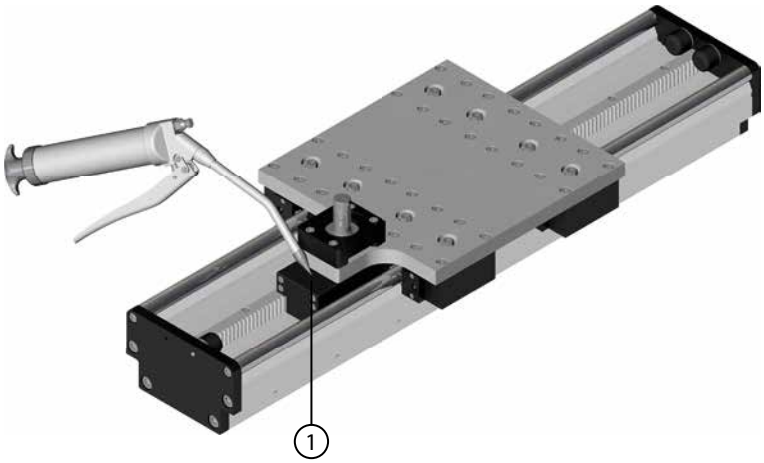

- The rack can be relubricated through a lubricating nipple **(1)** in the carriage.
- Regrease with an oil gun.

Lubricants

Lubricants

09006

09013
09014
09007
09002

09003

09001

09004

09009

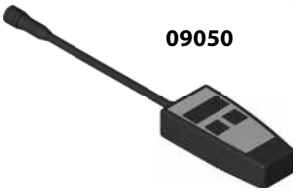
09050

09016

Code-No.	Name
09001	Molyduval, 1 litre, ISO-VG 220, range of temperature -30 °C bis 120 °C
09003	Steel oil gun for carriage rollers
09010	One hand oil gun 125cm³ (with cone tip und angle adapter*) **
09004	Steel grease gun for ballscrew
09009	regreasing adapter DLT/K 160
09012	One hand grease gun 125cm³ (with cone tip und angle adapter*) ***
09002	SKF grease LGMT 2/1 (1 kg)
09006	Grease gun filling device LAGF 5 (for 5 kg canister)
09007	SKF grease LGMT 2/5 (5 kg)
09013	Grease gun filling device LAGF 18 (for 18 kg canister)
09014	SKF grease LGMT 2/18 (18 kg)
09016	Grease cartridge with cannula (5ml) for DS 120
09050	Tension Tauges VSM-1

* for from outside difficult to reach nipples
**0,5 cm³ per stroke
***0,4 cm³ per stroke

09012

09010

Terms and conditions of sale and payment

Terms and conditions of sale and payment

§ 1 Scope of the General Terms and Conditions

(1) The Supplier's deliveries, services and offers are made solely on the basis of these General Terms and Conditions. Thus, these General Terms and Conditions shall also apply to all future business relations, even if not explicitly agreed upon again. At the latest, these General Terms and Conditions shall be considered accepted upon acceptance of the goods or services. Any counter confirmations made by the Customer with reference to its own terms and conditions are hereby rejected.

(2) All agreements made between the Supplier and the Customer for the purpose of the fulfilment of this contract must be in writing.

§ 2 Offer and Conclusion of Contract

(1) Offers made by the Supplier are non-binding and subject to change. Any declarations of acceptance and all orders require the Supplier's confirmation in writing or by fax to be legally binding. The contract is deemed to be concluded upon the Supplier's sending a written declaration (acknowledgement of order), which shall be the decisive document determining the scope of its obligations. The delivery substitutes a written acknowledgement of order.

(2) The performance parameters specified in our catalogues and offers, such as illustrations, drawings etc., shall be considered as approximate only. Drawings, illustrations, dimensions, weights or other performance data are only binding if they have been explicitly agreed on in writing. The Supplier reserves, without restriction, all rights of ownership and copyright to any quotations, drawings and other documents (hereinafter collectively referred to as the "Documents"). These Documents may not be made accessible to any third parties without the Supplier's prior consent; should the order not be placed with the Supplier, such documents are to be returned to the Supplier immediately on request.

(3) The Supplier's sales staff is not authorised to make any verbal collateral agreements or to give any verbal assurances that go beyond the content of the written contract.

(4) The Customer is liable for the accuracy, correctness and completeness of the order documents and order information provided by it; this includes in particular drawings as well as technical specifications and samples. Any verbal information, also with regard to modifications or amendments to the documents and data already submitted, must be confirmed in writing. If an order is neither confirmed in writing nor executed by the Supplier within one month of its receipt, or in particular cases (e.g. in case of custom-made products) within three months of receipt – in which case the Customer is bound by its order during such period – the Customer shall be entitled to revoke its order without having the right to claim damages from the Supplier.

§ 3 Prices

(1) Unless stated otherwise, the Supplier is bound by the prices given in its quotations for a period of 30 days from their date of issue. Otherwise the prices mentioned in the Supplier's acknowledgement of order shall apply, which do not include the applicable legal value added tax, nor any cost of installation, start-up and assembly. Additional deliveries and services will be invoiced separately. Minimum order value 25 Euro.

(2) Unless otherwise agreed, the prices are FOB Luhden warehouse, excluding packaging, freight, postage and insurance cost. The type of packaging shall be chosen by the Supplier at its discretion. The packaging shall be invoiced to the Customer at cost price and will not be taken back by the Supplier.

§ 4 Time of Delivery and Performance / Acceptance

(1) Delivery dates or periods, which may be agreed upon in a binding or non-binding manner, must be specified in writing. Our delivery period begins with the date of our acknowledgement of order, provided that at this time all of the documents required from the Customer, the necessary permits, releases, clarifications and approvals of plans have been submitted and the agreed payment terms and other obligations have been fulfilled and, in addition, any and all technical issues that were still open when the contract was signed have been mutually agreed upon. If these prerequisites are not met in time, the delivery period will be prolonged accordingly.

(2) The Supplier is not liable for delays in delivery and performance, even if binding dates and times have been agreed upon, in cases of force majeure or in case of circumstances which substantially and not only temporarily impede the delivery or make it impossible - this includes in particular strike, lock-out, government orders, malfunction or breakdown of important production facilities/machines, delays in the supply of essential raw materials and utilities, delays in transport, etc.; this applies also when these circumstances affect our suppliers or their sub-suppliers. In such cases, the Supplier shall be entitled to delay the supply and/or performance for the duration of the hindrance plus an appropriate start-up time or to withdraw totally or in part from that part of the contract which is not yet fulfilled.

(3) If the hindrance lasts for longer than 3 months, the Customer shall be entitled, after granting a reasonable extension of time, to withdraw from that part of the contract which is not yet fulfilled. Should the delivery time be extended or should the Supplier be released from its obligations, the Customer shall have no right to claim compensation for damages. The Supplier may only invoke the aforementioned circumstances, if the Customer is informed accordingly without delay.

(4) In as far as the Supplier is responsible for the non-compliance with bindingly promised deadlines and dates, or in as far as the Supplier is in default, the Customer shall be entitled to compensation for delayed performance at the amount of 1/2% of the invoice value for each complete week of the delayed performance, but limited in total to a maximum of 5% of the invoice value of all deliveries and services affected by the delay. Any claims beyond this are excluded, unless the delayed performance is based on at least gross negligence by the Supplier.

(5) The Supplier is at all times entitled to make partial deliveries or to render partial services, unless such partial deliveries or partial services are not of interest to the Customer.

(6) If a formal acceptance procedure of the delivered materials is desired, the conditions of such procedure must be established at the latest upon conclusion of the contract. The acceptance procedure must be carried out at the Supplier's premises immediately after it has declared its readiness for acceptance. The cost of the acceptance procedure shall be borne by the Customer. Partial deliveries are permissible.
In all other cases, the delivery object is deemed to be accepted when it is taken into operation in accordance with its intended use, however at the latest 3 weeks after delivery to the Customer.

(7) If the Customer is in default of acceptance, the Supplier shall be entitled to claim compensation for any damages it has incurred; upon default of acceptance, the risk of accidental deterioration or accidental loss passes to the Buyer.

§ 5 Transfer of Risk

The risk is transferred to the Customer as soon as the consignment has been handed over to the person responsible for the transport or has left the Supplier's warehouse for the purpose of dispatch, irrespective of who bears the freight costs. If the delivery is delayed upon the Customer's request, the risk shall pass to the Customer when the notice is given that the goods are ready for delivery. Any storage costs incurred after the transfer of risk shall be borne by the Customer. At the Customer's request and expense, the Supplier shall insure shipments against the usual transport risks.

§ 6 Customer's Rights in Case of Defects

(1) The products are delivered free of defects in design, manufacturing and materials; the period for assertion of claims for defects is one year from the transfer of risk. This does not apply to claims for damages caused by defects. In case of claims for damages caused by defects, section 13 shall apply.

Terms and conditions of sale and payment

(2) Should the Supplier's operating or maintenance instructions not be observed, or should the products be modified, parts exchanged or consumables used which do not comply with the original specifications, then any claims for defects of the products shall become void, if the Customer cannot refute a relevant substantiated statement claiming that one of these circumstances has caused the defect. The same applies if the deficiencies are due to poor installation, wrong assembly, poor maintenance, defective or negligent treatment or storage, defective repairs not executed by the Supplier, modifications made without our written consent, excessive load, unsuitable conditions of use and inappropriate operating materials or to any chemical, electro-chemical or electrical influences for which we are not responsible as well as weather or other natural influences.

(3) Any claims made by the Customer relating to defects require the Customer to have duly fulfilled its obligations according to section 377 of the German Commercial Code (HGB) in terms of examining the goods and lodging a complaint, otherwise any claims shall be insubstantial: The Customer shall notify the Supplier's customer service manager of any defects in writing immediately, at the latest within one week of receipt of the delivery. In case of defects which cannot be detected within this period despite careful inspection, the Supplier shall be informed in writing immediately after they have been discovered.

(4) If the Customer has notified the Supplier of a defect, the Supplier shall demand, at its choice and expense, that either:

a) the defective part or unit be sent to the Supplier for repair and subsequent return; or

b) the Customer shall keep the defective part or unit ready and the Supplier shall send a service technician to carry out the repair on the Buyer's premises.

Should the Customer request that rectification work be carried out at a certain location, the Supplier may do so; in this case, any exchanged parts shall not be invoiced, however, working time and travelling expenses shall have to be paid according to the Supplier's standard rates.

(5) If the rectification should fail after an appropriate period, the Customer can, at its choice, either demand a price reduction or withdraw from the contract.

(6) Liability for normal wear is excluded.

(7) Only the immediate Customer is entitled to claims due to defects against the Supplier and such claims are not transferable.

(8) In case of parts used for completion, refurbishment or modification sent by the Customer to the Supplier, the latter will assume no liability for their behaviour during processing; should the materials become damaged during processing, the Supplier shall be indemnified for the processing costs incurred up to that point, unless the damage is due to an intentional or grossly negligent breach of duty by the Supplier or its vicarious agent or a breach of duty that is of material importance to the object of the contract. This limitation of liability does not apply to personal injury or death.

§ 7 Replacement Parts

For a period of five years following delivery of a machine, the Supplier shall deliver replacement parts for that machine at the current prices.

§ 8 Retention of Title

(1) Until settlement of all accounts receivable to which the Supplier should be entitled from the Customer now or in future arising from any legal grounds (including all balance claims from current account), the following securities shall be granted to the Supplier, which it will release on request at its choice insofar as their value exceeds the accounts receivable lastingly by more than 10%.

(2) The goods remain the property of the Supplier. Processings or modifications of the goods are always made for the Supplier as manufacturer, but without any obligation for it. Should the Supplier's (co-)ownership expire as a result of combination of items, it is agreed upon already now that the Customer's (co-)ownership of this combined item is transferred to the Supplier in a pro rata manner (with regard to the invoice value). The Customer shall store the Supplier's (co-)property free of charge. Goods for which the Supplier is entitled to (co-)ownership will hereinafter be referred to as 'goods under reservation'.

(3) The Customer is entitled to process and sell the goods under reservation in proper business dealings, provided that it is not in default of payment. Pledging or assignment as security is inadmissible. Any other accounts receivable (including all balance claims from current account) arising from resale or any other legal ground (insurance, unlawful act) regarding the goods under reservation are already now assigned in full by the Customer to the Supplier as security. The Supplier authorises the Customer irrevocably to collect the accounts receivable transferred to the Supplier for the Supplier's account in its own name. This collection authorisation can only be revoked if the Customer does not duly meet its payment obligations.

(4) Should any third parties have access of any kind to the goods under reservation, especially by orders of attachment, the Customer shall draw attention to the fact that the goods are the Supplier's property and shall inform the Supplier immediately, so that the Supplier can enforce its rights of ownership. In as far as the third party is unable to reimburse the Supplier for judicial or out-of-court costs arising in this context, the Customer shall be liable for such costs.

(5) In the event of conduct in violation of the contract on the part of the Customer – in particular default of payment – the Supplier shall be entitled to withdraw from the contract and to demand the return of the goods under reservation.

(6) Up to the complete payment of the goods under reservation, the Customer is obliged to keep the Supplier informed about the location of the goods under reservation at any time.

§ 9 Payment

(1) Unless agreed otherwise, the Supplier's invoices are payable 30 days after invoicing without deductions.
The Supplier is entitled, despite provisions made by the Customer stipulating otherwise, at first to credit payments made by the Customer against its older debts and shall inform the Customer of the type of transaction made. In the case that expenses have been incurred or interest accrued, the Supplier is entitled to credit the payment at first against the expenses, then the interest and finally against the main service.

(2) A payment is deemed to have been made only when the Supplier has the amount at its disposal. In case of cheques the payment is deemed as having been made when the cheque is cashed.

(3) Should the Customer be in default of payment, the Supplier shall be entitled to demand interest at a rate of 8 percentage points above the base rate as lump-sum compensation from the relevant time onwards. A lower rate is to be applied if the Customer can provide evidence of a lower burden; the Supplier may provide evidence of a higher damage.

(4) Should the Supplier learn of any circumstances that call the Customer's credit standing into question, in particular in case that a cheque is not cashed or payments are suspended, or should the Supplier learn of any other circumstances which call the Customer's credit standing into question, the Supplier shall be entitled to deem the total remaining debt as due, even if it has accepted cheques. In this case the Supplier is also entitled to demand payments in advance or securities.

(5) The Customer is only entitled to set-off, retention or reduction, even in case that complaints have been made or compensating claims pleaded, when the compensating claims have been determined to be final and beyond dispute. The Customer is, however, also entitled to retention due to compensation claims arising from the same contractual relationship.

§ 10 Design Changes

The Supplier reserves the right to make design changes at any time; however, it is not obliged to include such changes also in products already delivered.

Terms and conditions of sale and payment

§ 11 Patents

(1) In case of custom-made products, the examination and the liability with respect to any third party's property rights is exclusively the responsibility of the Customer. The Customer shall be responsible towards the Supplier in full scope that any third party's property rights will not be infringed hereby and shall hold the Supplier harmless from any possible claims for damages made by third parties due to such an infringement.

(2) The Supplier, in turn, shall indemnify the Customer and its customers with regard to claims arising from violation of copyrights, trademarks or patents, unless the design of a delivery item originates from the Customer. As far as the amount of the indemnification is concerned, the Supplier's obligation to indemnify is limited to the expected damage.
An additional prerequisite for the indemnification is that the conducting of legal proceedings is to be left to the Supplier and that the stated violation of rights is to be assigned exclusively to the design of the Supplier's delivery items without combination or usage together with other products.

(3) The Supplier has the choice to release itself from the obligations taken on in paragraph 1 by either

a) procuring the required licences with regard to the alleged violated patents
or
b) putting an altered delivery item or parts thereof at the Customer's disposal, which in case of exchange with the violating delivery item or part thereof will eliminate the accusation of violation with regard to the delivery item.

§ 12 Secrecy

The Supplier's technical documents, drawings, service and operating manuals as well as any and all information received from the Supplier during the contract negotiations regarding the function and the structure of the goods are subject to secrecy. The Customer agrees to prevent unauthorized persons from getting access to the corresponding information.

(2) Unless expressly otherwise agreed in writing, the information submitted to the Supplier in connection with the orders are deemed as non-confidential.

§ 13 Liability

(1) Claims for damages are excluded regardless of the type of violation, including unlawful acts, insofar as they are not due to intention or gross negligence.

(2) As far as the violation of material contractual obligations is concerned, the Supplier is liable for any negligence, however only up to the amount of the foreseeable damage. Claims for lost profit, saved expenditure, claims for damages by third parties as well as claims for other indirect and consequential damages cannot be made unless an essential quality feature guaranteed by the Supplier has the express purpose of protecting the Customer from such damage.

(3) The liability limitations and exclusions in paragraphs 1 and 2 are not applicable to claims which are due to deceitful conduct on the part of the Supplier, nor in case of a liability for guaranteed quality features, nor to claims according to the product liability law, nor to injuries to life, body or health.

(4) Insofar as the liability of the Supplier is excluded or limited, this shall also apply to the Supplier's clerical staff, employees, representatives and vicarious agents.

§ 14 Final Provisions

(1) A transfer of the contractual rights and obligations to third parties by the Customer is not permitted unless the Supplier has given its written consent.

(2) These General Terms and Conditions and the complete legal relationship between Supplier and Customer are subject to the laws of the Federal Republic of Germany. The provisions of the UN Convention on Contracts for the International Sale of Goods shall not apply.

(3) Bückeburg shall be the exclusive place of jurisdiction for any disputes arising directly or indirectly out of the contractual relationship if the Customer is a trader, a legal person under public law or a special fund under public law. The Supplier shall also have the right to institute legal proceedings at the Customer's place of business.

(4) In accordance with section 33 of the German Data Protection Law (BDSG) it is hereby pointed out that the Customer's data will be stored by the Supplier. These data will be processed in accordance with both the Federal Data Protection Law (BDSG) and the Teleservices Data Protection Law.

(5) Should one of the provisions of these General Terms and Conditions or a provision of any other agreement be or become ineffective, this will not affect the validity of any other provisions or agreements.