Servo Insert Coupling

with set screws

optional full stainless steel version

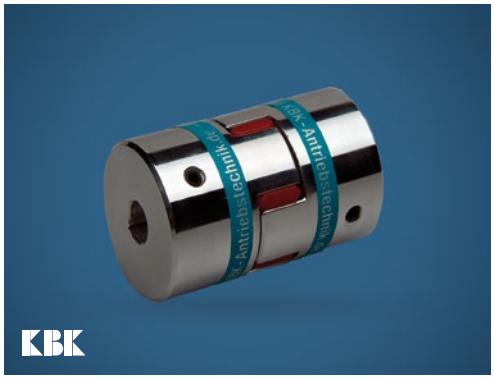

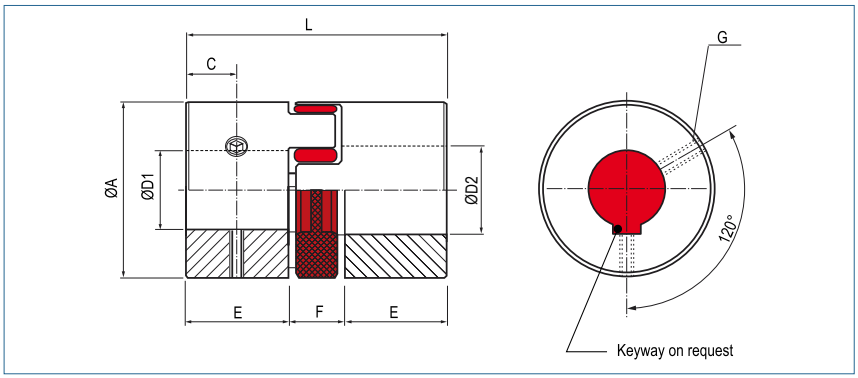

Order Code

KBE1	-	14	-	10	-	12	-	98Sh
Type		Size		ØD1 (H7)		ØD2 (H/)		Shore-hardness

Size	Dimensions (mm)							Technical Data			
	Ø A	L	Ø D1-D2	E	F	C	F				
	Outer Ø	Length	Bore Sizes (H7) min~max				Screw (ISO4029) TA (Nm)	max. speed rpm. (1/min)	Mass (per coupling) (g)	Moment of Inertia (per coupling) J (g m²)	Torque (Nm)
5	10	15	2 - 6	5	5	2.5	1 x M3 0.5	47500	2.62	0.0000216	0.5
7	14	22	4 - 7	7	8	3.5	2 x M3 1.3	34000	6.5	0.00018	1.2
9	20	30	6 - 9	10	10	5	2 x M3 1.3	24000	22	0.00105	3
14	30	35	6 - 16	11	13	5	1 x M4 3	16000	45	0.006	12.5
19	40	66	10 - 24	25	16	10	1 x M5 6	12000	187	0.040	17
24	55	78	16 - 28	30	18	10	1 x M5 6	8500	420	0.171	60
28	65	90	20 - 38	35	20	15	1 x M6 11	7200	577	0.368	160
38	80	114	20 - 45	45	24	15	1 x M8 25	6000	1200	1125	325
42	95	126	20 - 55	50	26	20	1 x M8 25	4800	1850	16103	450
48	105	140	20 - 60	56	28	20	1 x M8 25	4300	2562	4124	525

Material	hub - aluminium
	spider element - polyurethane
Hub	bore tolerance: H7
Keyway	optional acc. DIN 6885
Shore-hardness	to size 9: 92 Sh A (yellow)
	from size 14: 98 Sh A (red)

Further spider elements and technical data are available on page 42.